SECTION 00 11 13

ADVERTISEMENT FOR BIDS

City of Woonsocket
(Owner)

Sealed bids for construction of WWTF Gravity Thickener Internal Improvements (Bid #: 6165) for the City of Woonsocket, Rhode Island, will be received at the office of the Finance Director, located at 169 Main St., Woonsocket, Rhode Island 02895 until 2:00 pm prevailing time, on October 19, 2023 at which time and place said bids will be publicly opened and read aloud.

The scope of work includes the removal and replacement of all internal components within the gravity thickener, including the mechanism, support column, influent well, bridge, handrail, and aluminum cover. The thickener mechanism was pre-purchased by the City. The contractor will be responsible for all demolition and the installation of the new mechanism. All components and materials besides the mechanism will be the responsibility of the contractor to purchase.

Estimated construction cost: $1,350,000.

Bid security for all general bidders and sub-bidders in the form of a bid bond, cash, certified check, treasurer's or cashier's check, payable to the Owner, is required in the amount of 5% of the total bid, in accordance with the conditions in Section 00 21 13 INSTRUCTIONS TO BIDDERS.

The Instructions to Bidders, Form of General Bid, Agreement, Plans, Specifications, Performance and Payment Bond, and other Contract Documents may be examined at the following locations during normal business hours:

City Hall, 169 Main Street, Woonsocket, Rhode Island 02895.

Contract documents may be viewed and downloaded as Portable Document Format (PDF) files free of charge at:
https://www.woonsocketri.org/purchasing-department/pages/bids-rfps.

The selected contractor shall furnish a performance bond and a payment bond in amount at least equal to one hundred percent (100%) of the contract price as stipulated in Section 00 72 00 GENERAL CONDITIONS of these specifications.

A non-mandatory Prebid Conference will be held at 10:00 am on Thursday, October 5, 2023 at the Woonsocket WWTF, 11 Cumberland Hill Rd, Woonsocket, RI 02895. Any request for interpretation of plans and specifications may be submitted in writing at that time. Bidders will have an opportunity to view the site of the work following the Prebid Conference.

Attention of bidders is particularly called to the requirements as to conditions of employment to be observed and prevailing wage rates to be paid under the contract as determined by the Department of Labor and Industries under the provisions of Title 37 of the Rhode Island General

Laws, Chapters 12 and 13, as amended.

By submission of a bid, the Bidder agrees that this bid shall be good and may not be withdrawn for a period of 30 working days, Saturdays, Sundays and legal holidays excluded after the opening of bids.

The Owner reserves the right to waive any informalities or to reject any or all bids.

CITY OF WOONSOCKET, RHODE ISLAND

BY ITS

FINANCE DEPARTMENT

Weston & Sampson Engineers, Inc.
Reading, Massachusetts

P:\RI\WOONSOCKET, RI\ENG23-0204 - WWTF GT INTERNAL UPGRADES\SPECIFICATIONS\2 - FIRST DRAFT SPECS\00 11 13.00 - ADVERTISEMENT FOR BIDS (NEED BID #).DOCX

westonandsampson.com
WESTON & SAMPSON ENGINEERS, INC.
55 Walkers Brook Drive, Suite 100
Reading, MA 01867
tel: 978.532.1900

CONTRACT DOCUMENTS

September 2023

CITY OF
Woonsocket
RHODE ISLAND

Gravity Thickener Internal Improvements
Bid #: 6165

11 Cumberland Rd
Woonsocket, RI 02895

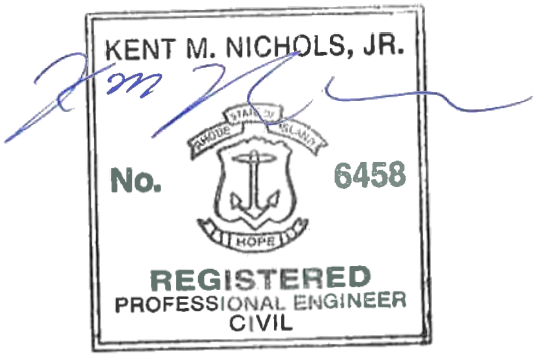

TABLE OF CONTENTS

Division	Section Name	Section No.
00	**Procurement and Contracting Requirements**	
	Advertisement for Bids	00 11 13
	Instructions to Bidders	00 21 13
	Permits	00 31 43
	Form of General Bid	00 41 13
	Agreement	00 52 00
	Performance Bond	00 61 13 .13
	Payment Bond	00 61 13 .16
	Change Orders	00 63 63
	General Conditions	00 72 00
	Supplementary Conditions	00 73 00
01	**General Requirements**	
	Control of Work and Materials	01 11 00
	Scope and Sequence of Work	01 12 16
	Measurement and Payment	01 22 00
	Submittals	01 33 23
	1. Submittal Transmittal Form	
	Cutting, Coring & Patching	01 73 29
	Cleaning Up	01 74 13
	Equipment Checkout and Testing	01 75 13
	Project Closeout	01 78 00
	Project As-built Record Drawings	01 78 39
02	**Existing Conditions**	
	Selective Structure Demolition	02 41 19
03	**Concrete**	
	Cast-in-Place Concrete	03 30 00
05	**Metals**	
	Metal Fabrications	05 50 00
	Extruded Aluminum Covers	05 51 36 .19
09	**Finishes**	
	Painting	09 90 00
11	**Equipment**	
	Equipment General	11 00 00

Division	Section Name	Section No.
26	**Electrical**	
	Electrical General	26 00 00
31	**Earthwork**	
	Earthwork General	31 00 00
	Loaming and Seeding	32 91 19
33	**Utilities**	
	Ductile Iron Pipe	33 31 13 .19
	Valves and Appurtenances for Wastewater Work	33 31 13 .37
40	**Process Integration**	
	PVC Piping	40 05 13 .73
46	**Wastewater Equipment**	
	Gravity Thickener Mechanism Supply (BY OTHERS) (For reference only) 1. *Approved Mechanism Submittal* 2. *Approved Weirs & Baffles Submittal*	46 71 13 .01
	Gravity Thickener Mechanism Installation	46 71 13 .02

END OF SECTION

P:\RI\Woonsocket, RI\ENG23-0204 - WWTF GT Internal Upgrades\Specifications\3 - Final Specs for Review_TOC.docx

SECTION 00 11 13

ADVERTISEMENT FOR BIDS

City of Woonsocket
(Owner)

Sealed bids for construction of WWTF Gravity Thickener Internal Improvements (Bid #: 6165) for the City of Woonsocket, Rhode Island, will be received at the office of the Finance Director, located at 169 Main St., Woonsocket, Rhode Island 02895 until 2:00 pm prevailing time, on October 19, 2023 at which time and place said bids will be publicly opened and read aloud.

The scope of work includes the removal and replacement of all internal components within the gravity thickener, including the mechanism, support column, influent well, bridge, handrail, and aluminum cover. The thickener mechanism was pre-purchased by the City. The contractor will be responsible for all demolition and the installation of the new mechanism. All components and materials besides the mechanism will be the responsibility of the contractor to purchase.

Estimated construction cost: $1,350,000.

Bid security for all general bidders and sub-bidders in the form of a bid bond, cash, certified check, treasurer's or cashier's check, payable to the Owner, is required in the amount of 5% of the total bid, in accordance with the conditions in Section 00 21 13 INSTRUCTIONS TO BIDDERS.

The Instructions to Bidders, Form of General Bid, Agreement, Plans, Specifications, Performance and Payment Bond, and other Contract Documents may be examined at the following locations during normal business hours:

City Hall, 169 Main Street, Woonsocket, Rhode Island 02895.

Contract documents may be viewed and downloaded as Portable Document Format (PDF) files free of charge at:
https://www.woonsocketri.org/purchasing-department/pages/bids-rfps.

The selected contractor shall furnish a performance bond and a payment bond in amount at least equal to one hundred percent (100%) of the contract price as stipulated in Section 00 72 00 GENERAL CONDITIONS of these specifications.

A non-mandatory Prebid Conference will be held at 10:00 am on Thursday, October 5, 2023 at the Woonsocket WWTF, 11 Cumberland Hill Rd, Woonsocket, RI 02895. Any request for interpretation of plans and specifications may be submitted in writing at that time. Bidders will have an opportunity to view the site of the work following the Prebid Conference.

Attention of bidders is particularly called to the requirements as to conditions of employment to be observed and prevailing wage rates to be paid under the contract as determined by the Department of Labor and Industries under the provisions of Title 37 of the Rhode Island General

Laws, Chapters 12 and 13, as amended.

By submission of a bid, the Bidder agrees that this bid shall be good and may not be withdrawn for a period of 30 working days, Saturdays, Sundays and legal holidays excluded after the opening of bids.

The Owner reserves the right to waive any informalities or to reject any or all bids.

CITY OF WOONSOCKET, RHODE ISLAND

BY ITS

FINANCE DEPARTMENT

Weston & Sampson Engineers, Inc.
Reading, Massachusetts

P:\RI\WOONSOCKET, RI\ENG23-0204 - WWTF GT INTERNAL UPGRADES\SPECIFICATIONS\2 - FIRST DRAFT SPECS\00 11 13.00 - ADVERTISEMENT FOR BIDS (NEED BID #).DOCX

SECTION 00 21 13

INSTRUCTIONS TO BIDDERS

1. Receipt and Opening of Bids
2. Location and Work to be Done
3. Preparation of Bid
4. Modification of Bids
5. Obligation of Bidder
6. Information not Guaranteed
7. Bid Security
8. Time for Completion
9. Addenda and Interpretations
10. Bid Opening Procedure
11. Comparison of Bids
12. Statutes Regulating Competitive Bidding
13. Right to Reject Bid
14. Ability and Experience of Bidder
15. Conditions of Work
16. Security for Faithful Performance
17. Power of Attorney
18. Laws and Regulations
19. Liquidated Damages for Failure to Enter into Contract
20. CONTRACTOR Records

1. Receipt and Opening of Bids

The City of Woonsocket, Rhode Island herein called the OWNER, acting by and through its Finance Department will receive sealed Bids for the construction of the Gravity Thickener Internal Improvements (Bid #: 6165) project**.**

Such bids addressed to the Finance Director and endorsed "WWTF Gravity Thickener Internal Improvements (Bid #: 6165)" will be received at the City Hall until 2:00 pm on October 19, 2023 at which time and place said bids will be publicly opened and read aloud.

If the building at which bids are to be received is closed for any reason on the date and time that bids are due, receipt of bids by the Owner will be postponed until the next business day at the time originally stated for receipt of bids.

Any bid may be withdrawn prior to the above scheduled time for the opening of bids or authorized postponement thereof. Any bid received after the time and date specified will not be considered. By submission of a bid, the bidder agrees that this bid shall be good and may not be withdrawn for the number of days, after the opening of bids, as stipulated in the FORM OF GENERAL BID.

2. Location and Work to be Done

The location, general characteristics, and principal details of the Work are indicated on a set of 7 drawings titled "Gravity Thickener Improvements (Bid #: 6165)" and numbered 1 to 7, inclusive.

Additional drawings showing details in accordance with which the Work is to be done may be furnished by addendum from time to time during the bidding period by the ENGINEER, and shall then become a part of the Contract Documents.

The CONTRACTOR shall furnish all superintendence, labor, services, materials, equipment, plant, machinery, apparatus, appliances, tools, supplies, bailing, shoring, removal, and all other things necessary to do all work required for the completion of each item of the Work and as herein specified. The Gravity Thickener mechanism, bridge, walkway, handrail, drive, scum beach, and effluent weir/launder has been pre-purchased by the City. The CONTRACTOR is responsible for installing all pre-purchased materials in accordance with the scope of the drawings, specifications, and manufacturer's recommendations.

The Work to be done and paid for under any item shall not be limited to the exact extent mentioned or described but shall include all incidental work necessary or customarily done for the completion of that item.

3. Preparation of Bid

Each bid must be submitted on the prescribed form in Section 00 41 13 FORM OF GENERAL BID. All blank spaces for bid prices must be filled in, in ink or typewritten, in both words and figures.

Each bid must be submitted in a sealed envelope bearing on the outside the name of the bidder, his address, and endorsed with the name of the project as specified in Receipt and Opening of Bids, above.

If forwarded by mail, the sealed envelope containing the bid must be enclosed in another envelope addressed as specified in Receipt and Opening of Bids, above.

4. Modification of Bids

Any bidder may modify its bid by written communication at any time prior to the scheduled closing time for receipt of bids. Any telegraphic communication must be received by the OWNER prior to the closing time, and, provided further, for any telegraphic communication that modifies a bid the OWNER is satisfied that a written confirmation of the modification over the signature of the bidder was mailed prior to the closing time.

The modification communication shall not reveal the bid price but shall provide the addition or subtraction or other modification so that the final prices or terms will not be known by the OWNER until the sealed bid is opened. If written confirmation is not received within two days from the closing time, no consideration will be given to the facsimile transmission.

5. Obligation of Bidder

At the time of the opening of bids each bidder will be presumed to have inspected the site and to have read and to be thoroughly familiar with the Contract Documents (including all addenda). The failure or omission of any bidder to examine any form, instrument, or document shall in no way relieve any bidder from any obligation in respect of its bid.

6. Information not Guaranteed

All information given in the Contract Documents relating to subsurface and other conditions, natural phenomena, existing pipes, and other structures is from the best sources at present available to the OWNER. All such information is furnished only for the information and convenience of bidders and is not guaranteed.

It is agreed and understood that the OWNER does not warrant or guarantee that the subsurface or other conditions, natural phenomena, existing pipes, or other structures encountered during construction will be the same as those indicated in the Contract Documents.

It is further agreed and understood that no bidder or CONTRACTOR shall use or be entitled to use any of the information made available to it or obtained in any examination made by it in any manner as a basis of or ground for any claim or demand against the OWNER or the ENGINEER, arising from or by reason of any variance which may exist between the information made available and the actual subsurface or other conditions, natural phenomena, existing pipes or other structures actually encountered during the

construction work, except as may otherwise be expressly provided for in the Contract Documents.

7. Bid Security

Each bid must be accompanied by a certified check, a bid bond, cash, a treasurer's or cashier's check, payable to the OWNER, in the amount stated in Section 00 11 13, ADVERTISEMENT FOR BIDS. Such deposits will be returned to all except the three lowest responsible and eligible bidders within five days, Saturdays, Sundays, and legal holidays excluded, after the opening of bids, and the remaining deposits will be returned promptly after the OWNER and the accepted bidder have executed the Contract, or if no notice of intent to award has been presented to the selected contractor within 30 days, Saturdays, Sundays and holidays excluded, after the date of the opening of bids, upon demand of the bidder at any time thereafter.

8. Time for Completion

The bidder must agree to commence work on or before a date to be specified in the written "Notice to Proceed" from the OWNER and to fully complete the project within the time limit stated in Section 00 41 13, FORM OF GENERAL BID.

9. Addenda and Interpretations

No interpretation of the meaning of the plans, specifications or other prebid documents will be made to any bidder orally, and if provided orally, shall not be relied upon by bidders unless confirmed in a written addendum. All information given to bidders other than by means of the plans, specifications, or by addenda, as described below, is given informally and shall not be used as the basis of a claim against the OWNER or the ENGINEER.

Every request for such interpretation should be in writing (typed, not handwritten) addressed to Weston & Sampson Engineers, Inc., 55 Walkers Brook Dr., # 100, Reading, MA 01867, Attention: CSD, or sent via email to Stuyvesant.jarod@wseinc.com and Mahoney.Caroline@WSEInc.com and to be given consideration must be received at least ten working days prior to the date fixed for the opening of bids.

Any and all such interpretations and any supplemental instructions will be in the form of written addenda to the specifications which, when issued, may be viewed and downloaded as a Portable Document File (PDF) at:
https://www.woonsocketri.org/purchasing-department/pages/bids-rfps

A notification of addenda will be emailed to all prospective bidders to email addresses furnished by them for such purposes. Bidders picking up sets of bid documents will be given all addenda issued to date and will be required to sign for all documents, acknowledging receipt. Failure of any bidder to receive any such addendum or interpretation shall not relieve such bidder from any obligation under its bid as submitted, and each bidder must confirm for itself that it has received all addenda. All addenda so issued shall become part of the Contract Documents.

10. Bid Opening Procedure

The following list of requirements shall be met by each filed bid.

Bids shall be filed at the place and before the time specified in Receipt and Opening of Bids, above.

The bid and all accompanying documents so required shall be signed by the Bidder or its authorized representative before submission.

All bidders shall include with their bids written acknowledgment of receipt of all addenda. Refer to acknowledgment form provided in Section 00 41 13, FORM OF GENERAL BID.

The total dollar amount of each bid will be read, and the three apparent lowest bids will be selected for further consideration. These three apparent low bids will be read aloud for the benefit of the other bidders and the bid opening procedure will be closed. All those present at the bid opening may examine all bids after the bid opening and after the reading of the three apparent low bids.

11. Comparison of Bids

Bids will be compared on the basis of the quantities and unit and lump sum prices stated in the bid forms.

In the event that there is a discrepancy in Section 00 41 13, FORM OF GENERAL BID between the lump sum or unit prices written in words and figures, the prices written in words will govern.

The OWNER agrees to examine and consider each FORM OF GENERAL BID submitted in consideration of the bidder's agreements, as hereinabove set forth and as set forth in Section 00 41 13, FORM OF GENERAL BID.

12. Statutes Regulating Competitive Bidding

Any bid which does not comply with the provisions of all applicable Rhode Island General Laws need not be accepted and the OWNER may reject every such bid.

13. Right to Reject Bid

The OWNER may consider informal any bid not prepared and submitted in accordance with the provisions hereof and may waive any informalities or reject any and all bids, should the OWNER deem it to be in the public interest to do so.

The OWNER may also reject bids which in its sole judgment are either incomplete, conditional, obscure or not responsive or which contain additions not called for, erasures not properly initialed, alterations, or similar irregularities, and may reject bids for any other

reason permitted by law, or the OWNER may waive such omissions, conditions or irregularities.

14. Ability and Experience of Bidder

No award will be made to any bidder who cannot satisfy the OWNER that it has sufficient ability and experience in this class of work and sufficient capital and plant to enable it to prosecute and complete the work successfully within the time named. The OWNER's decision or judgment on these matters will be final, conclusive, and binding to the fullest extent permitted by law.

The OWNER may make such investigations as it deems necessary, and the bidder shall furnish to the OWNER, under oath if so required, all such information and data for this purpose as the OWNER may request.

15. Conditions of Work

Each bidder must inform itself fully of the conditions relating to the construction of the project and the employment of labor thereon. Failure to do so will not relieve a successful bidder of its obligation to furnish all material and labor necessary to carry out the provisions of his contract. Insofar as possible the CONTRACTOR, in carrying out its work, must employ such methods or means as will not cause any interruption of or interference with the work of any other contractor.

16. Security for Faithful Performance

Simultaneously with its delivery of the executed Contract, the CONTRACTOR shall furnish a surety bond or bonds as security for faithful performance of this Contract and for the payment of all persons performing labor and materials under this Contract as specified in Section 00 72 00, GENERAL CONDITIONS included herein, each in the amount of 100 percent of its bid. The surety on such bond or bonds shall be a surety company qualified to do business under the laws of the State of Rhode Island and satisfactory to the OWNER. The bonds shall remain in force for one year after final acceptance of the work by the OWNER, unless the OWNER, in writing, releases the CONTRACTOR from the obligation sooner.

17. Power of Attorney

Attorneys-in-fact who sign Contract bonds must file with each bond a certified and effectively dated copy of their power of attorney.

18. Laws and Regulations

The bidder's attention is directed to the fact that all applicable State laws, municipal ordinances, and the rules and regulations of all authorities having jurisdiction over construction of the project shall apply to the Contract throughout, and they will be deemed to be included in the Contract the same as though herein written out in full. Attention is directed to applicable sections of this specification. In the event of any conflict between

provisions of law or regulation quoted or paraphrased in the Contract Documents, the actual provisions of law or regulation shall control.

19. Liquidated Damages for Failure to Enter into Contract

The successful bidder, upon its failure or refusal to execute and deliver the Contract, Bonds and Certificates of Insurance required within 10 days after it has received notice of the acceptance of its bid, shall forfeit to the OWNER, as liquidated damages for such failure or refusal, the security deposited with its bid, provided that the amount forfeited shall not exceed the difference between its bid price and the bid price of the next lowest responsible and eligible bidder. In case of death, disability, bonafide clerical or mechanical error of a substantial nature, or other similar unforeseen circumstances affecting the bidder, its bid deposit will be returned.

20. CONTRACTOR Records

The CONTRACTOR shall comply with the provisions of all applicable state and federal laws concerning CONTRACTOR records.

END OF SECTION

P:\RI\Woonsocket, RI\ENG23-0204 - WWTF GT Internal Upgrades\Specifications\1 - Editing for This Project\00 21 13.00 - INSTRUCTIONS TO BIDDERS.docx

SECTION 0031 43

PERMITS

PART 1 – GENERAL

1.01 DESCRIPTION:

This Section provides information and defines requirements of the Contractor regarding the preparation and acquisition of permits required to perform the work of this project.

1.02 RELATED WORK:

A. Section 01 11 00, CONTROL OF WORK AND MATERIALS

B. Section 02 41 19, SELECTIVE STRUCTURE DEMOLITION

1.03 GENERAL REQUIREMENTS:

A. The Owner has obtained or will obtain and pay for the permits listed below, which are required for this project. The Contractor shall assist in obtaining certain permits, as indicated. The Contractor shall obtain and pay for all other permits required, as defined under the Permits subsection of Section 00 72 00, GENERAL CONDITIONS.

Permits by Owner	***Status***
Wastewater Construction Permit	By Owner
Electrical Permit	*

**Contractor shall pay for and obtain the permit after contract is awarded.*

B. The Contractor shall perform the work in accordance with the Contract Documents, including the attached permits/order of conditions, and any applicable municipal requirements.

C. The Contractor shall follow all confined space entry requirements as needed to perform the necessary work involved.

PART 2 - PRODUCTS

Not Used.

PART 3 – EXECUTION

3.01 PERFORM WORK IN ACCORDANCE WITH REQUIREMENTS:

A. The Contractor shall perform the work in accordance with the Contract Documents, including the attached permits/order of conditions, and any applicable municipal requirements.

B. Prior to commencing any construction activities, the Contractor shall demonstrate to the Owner and the Engineer, through on-site inspection and submitting copies of permits or approvals, that it is in full compliance with the terms and conditions of all permits specified herein. The Contractor shall maintain full compliance with all permits throughout the performance of the work, and upon request, grant access to permitting authorities to inspect the site for the purpose of verifying such compliance.

END OF SECTION

P:\RI\Woonsocket, RI\ENG23-0204 - WWTF GT Internal Upgrades\Specifications\1 - Editing for This Project\00 31 43.00 - PERMITS.docx

SECTION 00 41 13

FORM OF GENERAL BID

Proposal of _____ (hereinafter called "Bidder")

(__) a corporation, organized and existing under the laws of the State of _____
(__) a joint venture
(__) a limited liability company
(__) a partnership
(__) an individual doing business as _____

To the City of Woonsocket Finance Department (hereinafter called the Owner).

The undersigned Bidder, in compliance with your invitation for bids for the construction of the Gravity Thickener Internal Improvements (Bid #: 6165), having examined the plans and specifications with related documents and the site of the proposed work and being familiar with all of the conditions surrounding the construction of the proposed project including the availability of materials and labor, hereby proposes to furnish all superintendence, labor, services, materials, equipment, plant, machinery, apparatus, appliances, tools, supplies, bailing, shoring, removal, and all other things necessary to construct the project in accordance with the contract documents, as prepared by Weston & Sampson Engineers, Inc., within the time set forth therein and at the prices stated below. These prices are to cover all expenses incurred in performing the work required under the contract documents, of which this bid is a part.

The Bidder hereby agrees to commence work under this contract on or before a date to be fixed in the written "Notice to Proceed" given by the Owner to the Contractor and to fully complete the project within 270 consecutive days of the start date fixed in the "Notice to Proceed. The Bidder further agrees to pay as liquidated damages the sum of $1,500 for each consecutive calendar day thereafter during which the work has not been fully completed, as provided in the "Liquidated Damages" provisions of Section 00 73 00 SUPPLEMENTARY CONDITIONS.

Bidder acknowledges receipt of addenda numbered: _____

The Bidder agrees to perform the work described in the specifications and shown on the plans for the following lump sum or unit prices:

Item No.	Quantity	Brief Description Unit Sum Price in Both Words and Figures	Total in Figures
1		**Gravity Thickener Internal Improvements:**	
1.a	1 LS	Gravity Thickener Internal Improvements complete, (being all work other than that covered by Item 1), lump sum. _____ Dollars and _____cents ($_____)	_____

TOTAL OF BID

The computed contract price for all Items inclusive is:

_____Dollars

and _____ Cents ($ _____).

All entries shall be made clearly in ink or typewritten. Amounts are to be shown in both words and figures. In case of discrepancy between the prices written in words and those written in figures, the amount shown in words shall govern. In the event there is a discrepancy between the unit prices and the total sum of all of the items (the computed contract price), the unit prices shall govern.

The above unit prices shall include all superintendence, labor, services, materials, equipment, plant, machinery, apparatus, appliances, tools, supplies, bailing, shoring, removal, and all other things necessary to cover the finished work of the several kinds called for.

The Bidder understands that all bids for this project are subject to the applicable bidding laws of the State of Rhode Island, including RIGL 37-13-2, as amended.

The contract will be awarded to the lowest responsive, qualified bidder.

The Bidder understands that the Owner reserves the right to reject any or all bids and to waive any informalities in the bidding.

The Bidder agrees that this bid shall be good and may not be withdrawn for a period of 30 days, Saturdays, Sundays and legal holidays excluded, after the opening of bids.

Within 10 days of receipt of the written notice of acceptance of this bid, the Bidder will execute the formal agreement attached in Section 00 52 00 AGREEMENT.

Bid security is attached in the sum of five percent (5%) of the total bid in accordance with the conditions of Section 00 21 13 INSTRUCTIONS TO BIDDERS. The bid security may become the property of the Owner in the event the contract and bond are not executed within the time set forth above.

The selected Contractor shall furnish a performance bond and a payment bond in an amount at least equal to one hundred percent (100%) of the contract prices in accordance with Section 00 61 13.13 PERFORMANCE BOND, Section 00 61 13.16 PAYMENT BOND, and as stipulated in Section 00 72 00 GENERAL CONDITIONS of these specifications.

The undersigned offers the following information as evidence of their qualifications to perform the work as bid upon according to all the requirements of the plans and specifications.

1. Have been in business under present name for ___ years.
2. The names and addresses of all persons interested in the bid (if made by a partnership or corporation) as Principals, are as follows:

_____

_____

_____

(Attach supplementary list if necessary)

3. The Bidder shall state below what work of a similar character to that included in the proposed contract it has done, and give references that will enable the Owner to judge its experience, skill and business standing (add supplementary page if necessary).

	Completion Date	Project Name	Contract Amount	Design Engineer	Reference Name	Telephone No.
a.						
b.						
c.						
d.						
e.						
f.						

Bank reference

_____
(Name)

_____
(Bank)

_____
(Address)

_____
(Telephone No.)

The undersigned hereby certifies that they are able to furnish labor that can work in harmony with all other elements of labor employed or to be employed in the work.

The undersigned certifies under penalties of perjury that this bid is in all respects bona fide, fair and made without collusion or fraud with any other person. As used in this paragraph the word "person" shall mean any natural person, joint venture, partnership, corporation or other business or legal entity.

Respectfully submitted:

Date:_____ By: _____
(Signature)

_____
(Name-Typed or Printed)

(SEAL - if bid is by a corporation)

_____
(Title)

_____
(Business Name)

_____
(Business Address)

_____
(City and State)

_____
(Telephone Number)

_____
(Fax Number)

SECTION 00 52 00

AGREEMENT

THIS AGREEMENT, made this ____ day of _____, _____, by and between the City of Woonsocket, Rhode Island, hereinafter called "OWNER," acting herein through the Finance Department, and_____, doing business as (a corporation) (a partnership) (a joint venture) (a limited liability company) (an individual)* located in the (City) (Town)* of _____, County of_____, and State of _____, hereinafter called "CONTRACTOR."

WITNESSETH: That for and in consideration of the payments and agreements hereinafter mentioned, to be made and performed by the OWNER, the CONTRACTOR hereby agrees with the OWNER to commence and complete the project described as follows:

Gravity Thickener Internal Improvements (Bid #: 6165)

hereinafter called the project, for the sum of _____ _____Dollars ($_____) and all extra work in connection therewith, under the terms as stated in the Contract Documents; and at its own proper cost and expense to furnish superintendence, labor, services, materials, equipment, plant, machinery, apparatus, appliances, tools, supplies, bailing, shoring, removal, and all other things necessary to complete the said project in accordance with the conditions and prices stated in Section 00 41 13 FORM OF GENERAL BID, Section 00 72 00 GENERAL CONDITIONS, Section 00 73 00 SUPPLEMENTARY CONDITIONS, the plans, which include all maps, plates, drawings, blue prints, and the specifications and all other contract documents therefor as prepared by Weston & Sampson Engineers, Inc., including all bid documents.

The CONTRACTOR hereby agrees to commence work under this contract on or before a date to be fixed in the written Notice to Proceed given by the OWNER to the CONTRACTOR and to fully complete the project within 270 consecutive days of the start date fixed in the "Notice to Proceed". The CONTRACTOR further agrees to pay as liquidated damages the sum of $1,500 for each consecutive calendar day thereafter during which the work has not been fully completed, as provided in the Liquidated Damages provisions of Section 00 73 00 SUPPLEMENTARY CONDITIONS.

The CONTRACTOR shall not discriminate against or exclude any person from participation herein on grounds of race, religion, color, sex, age, or national origin; and that it shall take affirmative actions to ensure that applicants are employed, and that employees are treated during their employment, without regard to race, religion, color, sex, age, handicapped status, or national origin.

The CONTRACTOR shall not participate in or cooperate with an international boycott, as defined in Section 999 (b)(3) and (4) of the Internal Revenue Code of 1954, as amended, or engage in conduct declared to be unlawful by Rhode Island General Laws.

Applicable provisions of Rhode Island General Laws and Regulations and/or the United States Code and Code of Federal Regulations govern this Agreement and any provision violation of the foregoing shall be deemed null, void and of no effect.

The OWNER agrees to pay the CONTRACTOR in current funds for the performance of the Agreement, subject to additions and deductions, as provided in Section 00 72 00 GENERAL CONDITIONS, and to make payments on account thereof as provided in Section 00 72 00 GENERAL CONDITIONS.

IN WITNESS WHEREOF, the parties to these presents have executed this Agreement in six (6) counterparts, each of which shall be deemed an original, in the year and day first above mentioned.

AGREED:

City of Woonsocket, Rhode Island
(Owner)

By_____

_____
(Name)

_____
(Title)

_____
(Contractor)

By_____

_____
(Name)

_____
(Title)

_____
(Address)

_____
(City and State)

Approved as to Form:

By_____
(Owner's Counsel)

_____
(Name)

CERTIFICATE OF VOTE

(to be filed if Contractor is a Corporation)

I, _____, hereby certify that I am the duly qualified and acting Secretary
(Secretary of Corporation)
of _____ and I further certify that a meeting of the Directors of said company,
(Name of Corporation)
duly called and held on _____, at which all members were present and voting, the
(Date of Meeting)
following vote was unanimously passed:

VOTED: To authorize and empower

_____

_____

_____

_____

_____

Anyone acting singly, to execute Forms of General Bid, Contracts or Bonds on behalf of the Corporation.

I further certify that the above vote is still in effect and has not been changed or modified in any respect.

By:_____
(Secretary of Corporation)

A True Copy:

Attest: _____
(Notary Public)

My Commission Expires:_____
(Date)

Contractor's Certification

A Contractor will not be eligible for award of a contract unless such Contractor has submitted the following certification, which is deemed a part of the resulting contract:

CONTRACTOR'S CERTIFICATION

_____

Name of the General Contractor

certifies that:

1. It intends to use the following listed construction trades in the work under the contract

   _____

   _____

2. Will comply with the minority workforce ratio and specific affirmative action steps contained herein; and

3. Will obtain from each of its subcontractors and submit to the contracting or administering agency prior to the award of any subcontract under this contract the subcontractor's certification required by these bid conditions.

_____

Signature of Authorized
Representative of Contractor

Subcontractor's Certification

Prior to the award of any subcontract, regardless of tier, the prospective subcontractor must execute and submit to the General Contractor the following certification, which will be deemed a part of the resulting subcontract:

SUBCONTRACTOR'S CERTIFICATION

_____

Name of the Subcontractor

certifies that:

1. It intends to use the following listed construction trades in the work under contract

   _____

   _____

2. Will comply with the minority workforce ratio and specific affirmative action steps contained herein; and

3. Will obtain from each of its subcontractors prior to the award of any subcontract under this contract the subcontractor's certification required by these bid conditions.

_____

Signature of Authorized
Representative of Subcontractor

NOTICE OF LABOR UNIONS OR OTHER ORGANIZATIONS OF WORKERS

NONDISCRIMINATION IN EMPLOYMENT

To: _____
(Name of union or organization of workers)

The undersigned currently holds contract(s) with _____ involving
(Name of Applicant)
funds or credit of the U.S. Government of (a) subcontract(s) with a prime Contractor holding such contract(s).

You are advised that under the provisions of the above contract(s) or subcontract(s) and in accordance with Executive Order 11246 the undersigned is obliged not to discriminate against any employee or applicant for employment because of race, color, creed, or national origin. This obligation not to discriminate in employment includes, but is not limited to, the following:

HIRING, PLACEMENT, UPGRADING, TRANSFER, OR DEMOTION

RECRUITMENT, ADVERTISING, OR SOLICITATION FOR

EMPLOYMENT TRAINING DURING EMPLOYMENT, RATES OF PAY OR

OTHER FORMS OF COMPENSATION, SELECTION FOR TRAINING

INCLUDING APPRENTICESHIP, LAYOFF OR TERMINATION.

This notice is furnished pursuant to the provisions of the above contract(s) or subcontract(s) and Executive Order 11246.

COPIES OF THIS NOTICE WILL BE POSTED BY THE UNDERSIGNED IN CONSPICUOUS PLACES AVAILABLE TO EMPLOYEES OR APPLICANTS FOR EMPLOYMENT.

_____

_____

_____
(Contractor or Subcontractor)

_____
(Date)

SECTION 00 61 13.13

PERFORMANCE BOND

KNOW ALL PERSONS BY THESE PRESENTS: That we _____
(Name of Contractor)
a _____hereinafter called "Principal" and
(Corporation, Partnership, Joint Venture, Limited Liability Company, or Individual)

_____ of _____, State of _____ hereinafter called
(Surety) (City/Town) (State)

"Surety" and licensed to do business under the laws of the State of Rhode Island are held and firmly bound to City of Woonsocket, Rhode Island, hereinafter called "Owner," in the penal sum of _____Dollars and _____Cents ($_____) in lawful money of the United States, for the payment of which sum well and truly to be made, we bind ourselves, our heirs, executors, administrators and successors, jointly and severally, firmly by these presents.

THE CONDITION OF THIS OBLIGATION is such that Whereas, the Principal entered into a certain contract with the Owner (the "Contract"), dated the _____ day of _____ , _____, which Contract is by reference made a part hereof, for the construction described as follows:

Gravity Thickener Internal Improvements (Bid #: 6165)

NOW, THEREFORE, if the Principal shall well, truly and faithfully perform its duties, all the undertakings, covenants, terms, conditions, and agreements of the Contract during the original term thereof, and any extensions thereof which may be granted by the Owner, with or without notice to the Surety, and if he shall satisfy all claims and demands incurred under the Contract, and shall fully indemnify and save harmless the Owner from all costs and damages which it may suffer by reason of failure to do so, and shall reimburse and repay the Owner all outlay and expense which the Owner may incur in making good any default, then this obligation shall be void; otherwise, this obligation shall remain in full force and effect.

PROVIDED, FURTHER, that the Surety's obligation under this Bond shall arise after (1) the Owner has declared the Principal in default of the Contract or any provision thereof, or (2) has declared that the Principal has failed, or is otherwise unable or unwilling, to execute the work consistent with, and in conformance to, the Contract (collectively referred to as a "Contractor Default"). The determination of a Contractor Default shall be made solely by the Owner. The Owner need not terminate the Contract to declare a Contractor Default or to invoke its rights under this Bond, and Contractor hereby agrees not to assert any claims against Surety under any indemnity or similar agreements on the grounds that Surety has interfered with the Contract by fulfilling its obligations hereunder in the absence of a termination of said contract.

When the Surety's obligation under this Bond arises, the Surety, at its sole expense and at

the consent and election of the Owner, shall promptly take one of following steps: (1) arrange for the Principal to perform and complete the work of the Contract; (2) arrange for a contractor other than the Principal to perform and complete the work of the Contract; (3) reimburse the Owner, in a manner and at such time as the Owner shall reasonably decide, for all costs and expenses incurred by the Owner in performing and completing the work of the Contract. Surety will keep Owner reasonably informed of the progress, status and results of any investigation of any claim of the Owner.

If the Surety does not proceed as provided in this Bond with due diligence and all deliberate speed, the Surety shall be deemed to be in default of this Bond, and the Owner shall be entitled to enforce any remedy available to the Owner.

After the Surety's obligation under this Bond arises, the Surety is obligated, to the limit of the amounts of this Bond, for (1) the correction of defective work and completion of the Contract; (2) additional design, professional services, and legal costs, including attorney's fees, resulting from the Contractor Default or from the default of the Surety under this Bond; (3) any additional work beyond the Contract made necessary by the Contractor Default or default of the Surety under this Bond; (4) indemnification obligations of the Principal, if any, as provided in the Contract; and (5) liquidated damages as provided in the Contract, or if no such damages are specified, actual damages and consequential damages resulting from the Contractor Default or any default of the Surety under this Bond.

Any proceeding, legal or equitable, under this Bond shall be instituted in any court of competent jurisdiction in the State of Rhode Island.

The Surety, for value received, hereby stipulates and agrees that no change, extension of time, alteration or addition to the terms of the Contract or to the work to be performed thereunder or the specifications accompanying the same shall in any way affect its obligation on this bond, and it does hereby waive notice of any such change, extension of time, alteration or addition to the terms of the Contract or to the work or to the specifications.

The Surety providing the Bond shall have a rating of A or better within Best's Key Rating Guide.

IN WITNESS WHEREOF, this instrument is executed in _____ ( ) counterparts, each one of which shall be deemed an original, this the _____ day of _____, 20___.

ATTEST:

_____	_____
Principal	Witness as to Principal Signature
By_____	_____
Signature	Name and Title
_____	_____
Name and Title	Address
_____	_____
Address	City and State
_____	
City and State	
	(SEAL)

ATTEST:

_____	_____
Surety	Witness as to Surety Signature
By_____	_____
Attorney-in-Fact Signature	Name and Title
_____	_____
Name and Title	Address
_____	_____
Address	City and State
_____	
City and State	
	(SEAL)

NOTE: Date of Bond must not be prior to date of Contract. If Contractor is a Partnership, all partners should execute Bond.

END OF SECTION

P:\RI\Woonsocket, RI\ENG23-0204 - WWTF GT Internal Upgrades\Specifications\1 - Editing for This Project\00 61 13.13 - PERFORMANCE BOND.docx

SECTION 00 61 13.16

PAYMENT BOND

KNOW ALL PERSONS BY THESE PRESENTS: That we _____
(Name of Contractor)
a _____hereinafter called "Principal" and
(Corporation, Partnership, Joint Venture, Limited Liability Company, or Individual)

_____ of _____, State of _____ hereinafter called
(Surety) (City/Town) (State)

"Surety" and licensed to do business under the laws of the State of Rhode Island are held and firmly bound to City of Woonsocket, Rhode Island, hereinafter called "Owner," in the penal sum of _____Dollars and _____Cents ($_____) in lawful money of the United States, for the payment of which sum well and truly to be made, we bind ourselves, our heirs, executors, administrators and successors, jointly and severally, firmly by these presents.

THE CONDITION OF THIS OBLIGATION is such that Whereas, the Principal has entered into a certain contract ("the Contract") with the Owner, dated the _____ day of _____ _____, _____, which Contract is by reference made a part hereof for the construction described as follows:

Gravity Thickener Internal Improvements (Bid #: 6165)

NOW, THEREFORE, if the Principal shall promptly make payment to all persons, firms, subcontractors, and corporations furnishing materials for or performing labor in the prosecution of the work provided for in such Contract, and any authorized extension or modification thereof, including all amounts due for materials, lubricants, oil, gasoline, repairs on machinery, equipment and tools, consumed or used in connection with the construction of such work, and all insurance premiums on said work, and for all labor, performed in such work whether by subcontractor or otherwise, then this obligation shall be void; otherwise to remain in full force and effect.

PROVIDED, FURTHER, that the said Surety, for value received hereby stipulates and agrees that no change, extension of time, alteration or addition to the terms of the Contract or to the work to be performed thereunder or the specifications accompanying the same shall in any way affect its obligation on this bond, and it does hereby waive notice of any such change, extension of time, alteration or addition to the terms of this Contract or to the work or to the specifications. The Surety Company providing the bond shall have a rating of A or better within the Best Key Rating Guide.

PROVIDED, FURTHER, that no final settlement between the Owner and the Contractor shall abridge the right of any beneficiary hereunder, whose claim may be unsatisfied.

IN WITNESS WHEREOF, this instrument is executed in _____ ( ) counterparts, each one of which shall be deemed an original, this the _____ day of _____, 20___.

ATTEST:

_____	_____
Principal	Witness as to Principal Signature
By_____	_____
Signature	Name and Title
_____	_____
Name and Title	Address
_____	_____
Address	City and State
_____	
City and State	
	(SEAL)

ATTEST:

_____	_____
Surety	Witness as to Surety Signature
By_____	_____
Attorney-in-Fact Signature	Name and Title
_____	_____
Name and Title	Address
_____	_____
Address	City and State
_____	
City and State	
	(SEAL)

NOTE: Date of Bond must not be prior to date of Contract. If Contractor is a Partnership, all partners should execute Bond.

END OF SECTION

P:\RI\Woonsocket, RI\ENG23-0204 - WWTF GT Internal Upgrades\Specifications\1 - Editing for This Project\00 61 13.16 - PAYMENT BOND.docx

SECTION 00 63 63

CHANGE ORDERS

Policy:

This Section supplements Article 12, Change of Contract Price, in the General Conditions and Supplementary Conditions.

All executed change orders submitted to the Engineer for review and processing must be prepared in accordance with the attached change order format with the appropriate number of copies, calculation sheet(s) (Appendix B) and all other supporting documentation necessary for evaluation. Failure to comply with these instructions will result in delays in processing the change order.

In order to avoid possible delays with approval of change orders, at the beginning of the project and as circumstances warrant, the Contractor shall submit a list of construction equipment, identifying major pieces of equipment to be utilized on the project. The list shall include the Contractor's designation, if any, the manufacturer, model, year of manufacture, serial number, size and horsepower of equipment. The Contractor shall also provide for approval a proposed bluebook equipment rental rate development that separately lists for each piece of equipment the monthly rental rate, area adjustment factor, depreciation factor, estimated operating cost per hour and total hourly rate. In the event the Contractor fails or is unable to provide appropriate rate information the Engineer may develop equipment rental rates for use on change orders.

Payment of Change Orders:

Payment of all change orders shall be in accordance with the relevant provisions of Rhode Island General Laws, as amended from time to time.

Payment of change orders shall be made in accordance with one of the following three methods:

A. Existing unit prices as set forth in the contract; or

B. Agreed upon lump sum or unit prices; or

C. Time and materials

A. Payment for work for which there is a unit price in the contract:

Where the contract contains a unit price for work and the Engineer orders a change for work of the same kind as other work contained in the contract and is performed under similar physical conditions, the Contractor shall accept full and final payment at the contract unit price(s) for the acceptable quantities. Under certain circumstances, the unit prices may be subject to revaluation and adjustment. See Article 11 in the Supplementary Conditions.

B. Payment for work or materials for which no price is contained in the contract:

If the Engineer directs, the Contractor shall submit promptly in writing to the Engineer an offer to do the required work on a lump sum or unit price basis, as specified by the Engineer. The stated price, either lump sum or unit price, shall be divided so as to show that it is the sum of:

1. The estimated cost of Labor, plus
2. Direct Labor Cost, plus
3. Material and Freight Costs, plus
4. Equipment Costs, plus
5. An amount not to exceed 15% of the sum of items 1 through 4 for overhead and profit, plus (if applicable),
6. In the case of work done by a subcontractor an amount not to exceed 5%, for the general contractor of the sum of the cost (not including subcontractor's overhead and profit) of items 1 through 4 for his overhead and profit (less, if applicable),
7. Credits for work deleted from the contract.

C. Payment for work on a time and materials basis:

Unless an agreed lump sum and/or unit price is obtained as noted above and is so stated in the change price, the Contractor shall accept as full payment for which no agreement is contained in contract, an amount equal to:

1. The estimated cost of Labor, plus
2. The Direct Labor Costs, plus
3. Equipment Costs, plus
4. Material and Freight Costs, plus
5. An amount not to exceed 15% of the sum of items 1 through 4 for overhead and profit, plus, if applicable,
6. In the case of work done by a subcontractor an amount not to exceed 5%, for the general contractor of the sum of the cost (not including subcontractor's overhead and profit) of items 1 through 4 for his overhead and profit (less, if applicable),
7. Credit for work deleted from the Contract.

Explanation of items 1 through 7 as outlined in "B" and "C" above:

1. Labor - Only those workers employed on the project who are doing the extra work, including the foreman in charge, are allowable. General foremen, superintendents, or other supervisory personnel are considered to be included in the overhead markup as provided in items 5 and/or 6. Hourly labor rates in excess of those as listed in the contract wage rates require documentation. As a minimum, an explanation and the appropriate copy of the certified payroll are required.

2. Direct Labor Costs - These costs are limited to those which are required in the contract document. Coverage in excess of the contract provisions, secured by the contractor/subcontractor(s) at his option, are ineligible. The following list of typical direct

labor charges is provided for your assistance and is in no way intended to be complete or all encompassing:

Workman's Compensation

Federal/State: Social Security Tax and Unemployment Tax;

Health, Welfare and Pension Benefits; (this cost is included in the wage rates appearing in Attachment A, Rhode Island Wage Rates.

Liability insurance:	Bodily injury; excess umbrella; property damage; public
Blasters insurance:	If applied to any required direct labor costs
Builders risk insurance:	If applied to any required direct labor costs
Experience modification insurance:	If applied to any required direct labor costs
Surcharges:	If applied to any required direct labor costs

Following award and prior to execution of a construction contract, the Contractor and filed subbidders (where applicable) shall submit for review by the Owner, documentation to establish the markup percentage(s).

The documented direct labor markup for this contract may be adjusted on an annual basis as measured from the date the contract is executed. The contract agreement will provide for the establishment of the Direct Labor Cost percentage.

3. Material and Freight - Only those materials required as a result of the change order and reasonable freight charges for delivery of same are allowable.

4. Equipment - Only the equipment required as a result of the change order is allowable. Equipment rental rates shall be governed by the current EquipmentWatch, division of Intertec Publishing [Formerly Nielson/Dataquest] Rental Rate Bluebook for Construction Equipment (the "Bluebook"). In determining the rental rate the following shall apply:

   a. For equipment already on the project - the monthly prorated rental rate by the hourly use shall be applicable;

   b. For equipment not on the project the daily rate, the weekly rate, or monthly rate will prevail, whichever will prove to be most cost effective. Small tools and manual equipment are examples of costs not allowable under this item. These costs are considered to be included in the overhead markup as provided in items 5 and/or 6.

(1 Month (Normal Use) = 176 hours)

5.& 6. Overhead and Profit - All other costs not previously mentioned are considered to be included in this item, be it for the general contractor or subcontractor(s).

7. Credits - Work deleted, material and equipment removed from the contract, stored and/or returned shall be credited to the cost of the change order, less documented costs.

The Contractor shall furnish itemized statements of the cost of the work ordered and shall give the Engineer access to all accounts, bills and vouchers relating thereto; and unless the Contractor shall furnish such itemized statements, and access to all accounts, bills and vouchers, he shall not be entitled to payment for any items of extra work for which such information is sought by the Engineer.

APPENDIX A

CHANGE ORDER
Gravity Thickener Internal Improvements (Bid #: 6165)
Woonsocket, RI

Sheet __ of __

Date_____

Project No. _____

Contract No. _____

Change Order No. _____

Owner's Name: _____

Owner's Address: _____

Contractor's Name: _____

Contractor's Address: _____

Item 1:

Description of Change:_____

_____

Reason for Change:_____

_____

Backup Information:_____

_____

Cost: $_____

_____

Item 2

Description of Change:_____

_____

Reason for Change:_____

_____

Backup Information:_____

_____

Cost: $_____

_____

Change Order (Continued)
Gravity Thickener Internal Improvements (Bid #: 6165)
Woonsocket, RI

Sheet __ of __

Date_____

Project No. _____

Contract No. _____

Change Order No. _____

Contract Amount (As Bid) $_____

Amount of Previous Change Orders $_____

Net Change in Contract Price (this Change Order) $_____

Total Adjusted Contract Price (including this Change Order $_____

This Change Order extends the time to complete the work by ____ calendar days.

The extended completion date is _____ _____.

This Change Order checked by: _____
Resident Representative Date

This Change Order is requested by: _____

This Change Order is recommended by:

_____
Consultant Engineer P.E. # Date

The undersigned agree to the terms of the Change Order.

_____
Contractor Date

_____
Owner Date

Appendix B
Example Calculation Sheet

1. Labor

Foreman	10 hours @	$10.00/hour	$100.00
Engineer	10 hours @	8.50/hour	85.00
Operator	10 hours @	9.50/hour	95.00
Laborers	24 hours @	7.00/hour	168.00
			$448.00

2. Direct Labor Cost (use the agreed upon Direct Labor Cost)

*(30)% of $448.
*(used for example purposes only) $ 134.00

3. Materials & Freight

150 1.f. of 12" pipe @ $2.00/1.f.	$ 300.00
15 v.f. precast SMH	1,700.00
Freight (slip#___ enclosed)	25.00
	$2,025.00

4. Equipment

1 Backhoe	10 hours @	$ 80.00/hour	$ 800.00
1 Truck-crane	10 hours @	100.00/hour	1000.00
			$1800.00

TOTAL (items 1 through 4): $4,407.00

5. (20%) markup for Overhead, Profit

(20%) of $4,407 $ 881.00

6. (7½%) markup on subcontractor's cost for general contractor (if subcontractor is involved)

(7½%) of $4,407 $ 331.00

7. Credits (deductibles) -$323.00

TOTAL COST : $5,296.00

Reminder: Provide support documentation as necessary i.e. vouchers, correspondence, calculation, photographs, reports, etc**.**

END OF SECTION

P:\RI\Woonsocket, RI\ENG23-0204 - WWTF GT Internal Upgrades\Specifications\1 - Editing for This Project\00 63 63.00 - CHANGE ORDERS.docx

This document has important legal consequences; consultation with an attorney is encouraged with respect to its use or modification. This document should be adapted to the particular circumstances of the contemplated Project and the controlling Laws and Regulations.

STANDARD GENERAL CONDITIONS OF THE CONSTRUCTION CONTRACT

Prepared by

EJCDC®
ENGINEERS JOINT CONTRACT DOCUMENTS COMMITTEE

Issued and Published Jointly by

ACEC
AMERICAN COUNCIL OF ENGINEERING COMPANIES

ASCE
AMERICAN SOCIETY OF CIVIL ENGINEERS

National Society of Professional Engineers®

EJCDC® C-700, Standard General Conditions of the Construction Contract.
Copyright © 2013 National Society of Professional Engineers, American Council of Engineering Companies, and American Society of Civil Engineers. All rights reserved.

These General Conditions have been prepared for use with the Agreement Between Owner and Contractor for Construction Contract (EJCDC® C-520, Stipulated Sum, or C-525, Cost-Plus, 2013 Editions). Their provisions are interrelated and a change in one may necessitate a change in the other.

To prepare supplementary conditions that are coordinated with the General Conditions, use EJCDC's Guide to the Preparation of Supplementary Conditions (EJCDC® C-800, 2013 Edition). The full EJCDC Construction series of documents is discussed in the Commentary on the 2013 EJCDC Construction Documents (EJCDC® C-001, 2013 Edition).

Copyright © 2013:

National Society of Professional Engineers

1420 King Street, Alexandria, VA 22314-2794

(703) 684-2882

www.nspe.org

American Council of Engineering Companies

1015 15th Street N.W., Washington, DC 20005

(202) 347-7474

www.acec.org

American Society of Civil Engineers

1801 Alexander Bell Drive, Reston, VA 20191-4400

(800) 548-2723

www.asce.org

The copyright for this document is owned jointly by the three sponsoring organizations listed above. The National Society of Professional Engineers is the Copyright Administrator for the EJCDC documents; please direct all inquiries regarding EJCDC copyrights to NSPE.

NOTE: EJCDC publications may be purchased at www.ejcdc.org, or from any of the sponsoring organizations above.

Copyright © 2013 National Society of Professional Engineers, American Council of Engineering Companies, and American Society of Civil Engineers. All rights reserved.

STANDARD GENERAL CONDITIONS OF THE CONSTRUCTION CONTRACT

TABLE OF CONTENTS

Page

Article 1 – Definitions and Terminology 1

1.01 Defined Terms 1

1.02 Terminology 5

Article 2 – Preliminary Matters 6

2.01 Delivery of Bonds and Evidence of Insurance 6

2.02 Copies of Documents 6

2.03 Before Starting Construction 7

2.04 Preconstruction Conference; Designation of Authorized Representatives 7

2.05 Initial Acceptance of Schedules 7

2.06 Electronic Transmittals 8

Article 3 – Documents: Intent, Requirements, Reuse 8

3.01 Intent 8

3.02 Reference Standards 8

3.03 Reporting and Resolving Discrepancies 9

3.04 Requirements of the Contract Documents 9

3.05 Reuse of Documents 10

Article 4 – Commencement and Progress of the Work 10

4.01 Commencement of Contract Times; Notice to Proceed 10

4.02 Starting the Work 10

4.03 Reference Points 11

4.04 Progress Schedule 11

4.05 Delays in Contractor's Progress 11

Article 5 – Availability of Lands; Subsurface and Physical Conditions; Hazardous Environmental Conditions 12

5.01 Availability of Lands 12

5.02 Use of Site and Other Areas 12

5.03 Subsurface and Physical Conditions 13

5.04 Differing Subsurface or Physical Conditions 14

5.05 Underground Facilities 15

Copyright © 2013 National Society of Professional Engineers, American Council of Engineering Companies, and American Society of Civil Engineers. All rights reserved.

5.06 Hazardous Environmental Conditions at Site 17
Article 6 – Bonds and Insurance 19
6.01 Performance, Payment, and Other Bonds 19
6.02 Insurance—General Provisions 20
6.03 Contractor's Insurance 21
6.04 Owner's Liability Insurance 23
6.05 Property Insurance 23
6.06 Waiver of Rights 25
6.07 Receipt and Application of Property Insurance Proceeds 26
Article 7 – Contractor's Responsibilities 27
7.01 Supervision and Superintendence 27
7.02 Labor; Working Hours 27
7.03 Services, Materials, and Equipment 27
7.04 "Or Equals" 27
7.05 Substitutes 29
7.06 Concerning Subcontractors, Suppliers, and Others 30
7.07 Patent Fees and Royalties 32
7.08 Permits 32
7.09 Taxes 32
7.10 Laws and Regulations 32
7.11 Record Documents 33
7.12 Safety and Protection 33
7.13 Safety Representative 34
7.14 Hazard Communication Programs 34
7.15 Emergencies 34
7.16 Shop Drawings, Samples, and Other Submittals 35
7.17 Contractor's General Warranty and Guarantee 37
7.18 Indemnification 38
7.19 Delegation of Professional Design Services 38
Article 8 – Other Work at the Site 39
8.01 Other Work 39
8.02 Coordination 40
8.03 Legal Relationships 40

Copyright © 2013 National Society of Professional Engineers, American Council of Engineering Companies, and American Society of Civil Engineers. All rights reserved.

Article 9 – Owner's Responsibilities 41
9.01 Communications to Contractor 41
9.02 Replacement of Engineer 41
9.03 Furnish Data 41
9.04 Pay When Due 41
9.05 Lands and Easements; Reports, Tests, and Drawings 41
9.06 Insurance 42
9.07 Change Orders 42
9.08 Inspections, Tests, and Approvals 42
9.09 Limitations on Owner's Responsibilities 42
9.10 Undisclosed Hazardous Environmental Condition 42
9.11 Evidence of Financial Arrangements 42
9.12 Safety Programs 42
Article 10 – Engineer's Status During Construction 42
10.01 Owner's Representative 42
10.02 Visits to Site 42
10.03 Project Representative 43
10.04 Rejecting Defective Work 43
10.05 Shop Drawings, Change Orders and Payments 43
10.06 Determinations for Unit Price Work 43
10.07 Decisions on Requirements of Contract Documents and Acceptability of Work 43
10.08 Limitations on Engineer's Authority and Responsibilities 44
10.09 Compliance with Safety Program 44
Article 11 – Amending the Contract Documents; Changes in the Work 44
11.01 Amending and Supplementing Contract Documents 44
11.02 Owner-Authorized Changes in the Work 45
11.03 Unauthorized Changes in the Work 45
11.04 Change of Contract Price 46
11.05 Change of Contract Times 47
11.06 Change Proposals 47
11.07 Execution of Change Orders 48
11.08 Notification to Surety 48
Article 12 – Claims 48

Copyright © 2013 National Society of Professional Engineers, American Council of Engineering Companies, and American Society of Civil Engineers. All rights reserved.

12.01 Claims 48
Article 13 – Cost of the Work; Allowances; Unit Price Work 49
13.01 Cost of the Work 49
13.02 Allowances 52
13.03 Unit Price Work 52
Article 14 – Tests and Inspections; Correction, Removal or Acceptance of Defective Work 53
14.01 Access to Work 53
14.02 Tests, Inspections, and Approvals 53
14.03 Defective Work 54
14.04 Acceptance of Defective Work 55
14.05 Uncovering Work 55
14.06 Owner May Stop the Work 55
14.07 Owner May Correct Defective Work 56
Article 15 – Payments to Contractor; Set-Offs; Completion; Correction Period 56
15.01 Progress Payments 56
15.02 Contractor's Warranty of Title 59
15.03 Substantial Completion 60
15.04 Partial Use or Occupancy 60
15.05 Final Inspection 61
15.06 Final Payment 61
15.07 Waiver of Claims 62
15.08 Correction Period 63
Article 16 – Suspension of Work and Termination 64
16.01 Owner May Suspend Work 64
16.02 Owner May Terminate for Cause 64
16.03 Owner May Terminate For Convenience 65
16.04 Contractor May Stop Work or Terminate 65
Article 17 – Final Resolution of Disputes 66
17.01 Methods and Procedures 66
Article 18 – Miscellaneous 66
18.01 Giving Notice 66
18.02 Computation of Times 66
18.03 Cumulative Remedies 66

Copyright © 2013 National Society of Professional Engineers, American Council of Engineering Companies, and American Society of Civil Engineers. All rights reserved.

18.04 Limitation of Damages 67
18.05 No Waiver 67
18.06 Survival of Obligations 67
18.07 Controlling Law 67
18.08 Headings 67

Copyright © 2013 National Society of Professional Engineers, American Council of Engineering Companies, and American Society of Civil Engineers. All rights reserved.

ARTICLE 1 – DEFINITIONS AND TERMINOLOGY

1.01 *Defined Terms*

A. Wherever used in the Bidding Requirements or Contract Documents, a term printed with initial capital letters, including the term's singular and plural forms, will have the meaning indicated in the definitions below. In addition to terms specifically defined, terms with initial capital letters in the Contract Documents include references to identified articles and paragraphs, and the titles of other documents or forms.

1. *Addenda*—Written or graphic instruments issued prior to the opening of Bids which clarify, correct, or change the Bidding Requirements or the proposed Contract Documents.

2. *Agreement*—The written instrument, executed by Owner and Contractor, that sets forth the Contract Price and Contract Times, identifies the parties and the Engineer, and designates the specific items that are Contract Documents.

3. *Application for Payment*—The form acceptable to Engineer which is to be used by Contractor during the course of the Work in requesting progress or final payments and which is to be accompanied by such supporting documentation as is required by the Contract Documents.

4. *Bid*—The offer of a Bidder submitted on the prescribed form setting forth the prices for the Work to be performed.

5. *Bidder*—An individual or entity that submits a Bid to Owner.

6. *Bidding Documents*—The Bidding Requirements, the proposed Contract Documents, and all Addenda.

7. *Bidding Requirements*—The advertisement or invitation to bid, Instructions to Bidders, Bid Bond or other Bid security, if any, the Bid Form, and the Bid with any attachments.

8. *Change Order*—A document which is signed by Contractor and Owner and authorizes an addition, deletion, or revision in the Work or an adjustment in the Contract Price or the Contract Times, or other revision to the Contract, issued on or after the Effective Date of the Contract.

9. *Change Proposal*—A written request by Contractor, duly submitted in compliance with the procedural requirements set forth herein, seeking an adjustment in Contract Price or Contract Times, or both; contesting an initial decision by Engineer concerning the requirements of the Contract Documents or the acceptability of Work under the Contract Documents; challenging a set-off against payments due; or seeking other relief with respect to the terms of the Contract.

10. *Claim*—(a) A demand or assertion by Owner directly to Contractor, duly submitted in compliance with the procedural requirements set forth herein: seeking an adjustment of Contract Price or Contract Times, or both; contesting an initial decision by Engineer concerning the requirements of the Contract Documents or the acceptability of Work under the Contract Documents; contesting Engineer's decision regarding a Change Proposal; seeking resolution of a contractual issue that Engineer has declined to address; or seeking other relief with respect to the terms of the Contract; or (b) a demand or assertion by Contractor directly to Owner, duly submitted in compliance with the procedural requirements set forth herein, contesting Engineer's decision

Copyright © 2013 National Society of Professional Engineers, American Council of Engineering Companies, and American Society of Civil Engineers. All rights reserved.

regarding a Change Proposal; or seeking resolution of a contractual issue that Engineer has declined to address. A demand for money or services by a third party is not a Claim.

11. *Constituent of Concern*—Asbestos, petroleum, radioactive materials, polychlorinated biphenyls (PCBs), hazardous waste, and any substance, product, waste, or other material of any nature whatsoever that is or becomes listed, regulated, or addressed pursuant to (a) the Comprehensive Environmental Response, Compensation and Liability Act, 42 U.S.C. §§9601 et seq. ("CERCLA"); (b) the Hazardous Materials Transportation Act, 49 U.S.C. §§5501 et seq.; (c) the Resource Conservation and Recovery Act, 42 U.S.C. §§6901 et seq. ("RCRA"); (d) the Toxic Substances Control Act, 15 U.S.C. §§2601 et seq.; (e) the Clean Water Act, 33 U.S.C. §§1251 et seq.; (f) the Clean Air Act, 42 U.S.C. §§7401 et seq.; or (g) any other federal, state, or local statute, law, rule, regulation, ordinance, resolution, code, order, or decree regulating, relating to, or imposing liability or standards of conduct concerning, any hazardous, toxic, or dangerous waste, substance, or material.

12. *Contract*—The entire and integrated written contract between the Owner and Contractor concerning the Work.

13. *Contract Documents*—Those items so designated in the Agreement, and which together comprise the Contract.

14. *Contract Price*—The money that Owner has agreed to pay Contractor for completion of the Work in accordance with the Contract Documents. .

15. *Contract Times*—The number of days or the dates by which Contractor shall: (a) achieve Milestones, if any; (b) achieve Substantial Completion; and (c) complete the Work.

16. *Contractor*—The individual or entity with which Owner has contracted for performance of the Work.

17. *Cost of the Work*—See Paragraph 13.01 for definition.

18. *Drawings*—The part of the Contract that graphically shows the scope, extent, and character of the Work to be performed by Contractor.

19. *Effective Date of the Contract*—The date, indicated in the Agreement, on which the Contract becomes effective.

20. *Engineer*—The individual or entity named as such in the Agreement.

21. *Field Order*—A written order issued by Engineer which requires minor changes in the Work but does not change the Contract Price or the Contract Times.

22. *Hazardous Environmental Condition*—The presence at the Site of Constituents of Concern in such quantities or circumstances that may present a danger to persons or property exposed thereto. The presence at the Site of materials that are necessary for the execution of the Work, or that are to be incorporated in the Work, and that are controlled and contained pursuant to industry practices, Laws and Regulations, and the requirements of the Contract, does not establish a Hazardous Environmental Condition.

23. *Laws and Regulations; Laws or Regulations*—Any and all applicable laws, statutes, rules, regulations, ordinances, codes, and orders of any and all governmental bodies, agencies, authorities, and courts having jurisdiction.

24. *Liens*—Charges, security interests, or encumbrances upon Contract-related funds, real property, or personal property.

Copyright © 2013 National Society of Professional Engineers, American Council of Engineering Companies, and American Society of Civil Engineers. All rights reserved.

25. *Milestone*—A principal event in the performance of the Work that the Contract requires Contractor to achieve by an intermediate completion date or by a time prior to Substantial Completion of all the Work.

26. *Notice of Award*—The written notice by Owner to a Bidder of Owner's acceptance of the Bid.

27. *Notice to Proceed*—A written notice by Owner to Contractor fixing the date on which the Contract Times will commence to run and on which Contractor shall start to perform the Work.

28. *Owner*—The individual or entity with which Contractor has contracted regarding the Work, and which has agreed to pay Contractor for the performance of the Work, pursuant to the terms of the Contract.

29. *Progress Schedule*—A schedule, prepared and maintained by Contractor, describing the sequence and duration of the activities comprising the Contractor's plan to accomplish the Work within the Contract Times.

30. *Project*—The total undertaking to be accomplished for Owner by engineers, contractors, and others, including planning, study, design, construction, testing, commissioning, and start-up, and of which the Work to be performed under the Contract Documents is a part.

31. *Project Manual*—The written documents prepared for, or made available for, procuring and constructing the Work, including but not limited to the Bidding Documents or other construction procurement documents, geotechnical and existing conditions information, the Agreement, bond forms, General Conditions, Supplementary Conditions, and Specifications. The contents of the Project Manual may be bound in one or more volumes.

32. *Resident Project Representative*—The authorized representative of Engineer assigned to assist Engineer at the Site. As used herein, the term Resident Project Representative or "RPR" includes any assistants or field staff of Resident Project Representative.

33. *Samples*—Physical examples of materials, equipment, or workmanship that are representative of some portion of the Work and that establish the standards by which such portion of the Work will be judged.

34. *Schedule of Submittals*—A schedule, prepared and maintained by Contractor, of required submittals and the time requirements for Engineer's review of the submittals and the performance of related construction activities.

35. *Schedule of Values*—A schedule, prepared and maintained by Contractor, allocating portions of the Contract Price to various portions of the Work and used as the basis for reviewing Contractor's Applications for Payment.

36. *Shop Drawings*—All drawings, diagrams, illustrations, schedules, and other data or information that are specifically prepared or assembled by or for Contractor and submitted by Contractor to illustrate some portion of the Work. Shop Drawings, whether approved or not, are not Drawings and are not Contract Documents.

37. *Site*—Lands or areas indicated in the Contract Documents as being furnished by Owner upon which the Work is to be performed, including rights-of-way and easements, and such other lands furnished by Owner which are designated for the use of Contractor.

Copyright © 2013 National Society of Professional Engineers, American Council of Engineering Companies, and American Society of Civil Engineers. All rights reserved.

38. *Specifications*—The part of the Contract that consists of written requirements for materials, equipment, systems, standards, and workmanship as applied to the Work, and certain administrative requirements and procedural matters applicable to the Work.

39. *Subcontractor*—An individual or entity having a direct contract with Contractor or with any other Subcontractor for the performance of a part of the Work.

40. *Substantial Completion*—The time at which the Work (or a specified part thereof) has progressed to the point where, in the opinion of Engineer, the Work (or a specified part thereof) is sufficiently complete, in accordance with the Contract Documents, so that the Work (or a specified part thereof) can be utilized for the purposes for which it is intended. The terms "substantially complete" and "substantially completed" as applied to all or part of the Work refer to Substantial Completion thereof.

41. *Successful Bidder*—The Bidder whose Bid the Owner accepts, and to which the Owner makes an award of contract, subject to stated conditions.

42. *Supplementary Conditions*—The part of the Contract that amends or supplements these General Conditions.

43. *Supplier*—A manufacturer, fabricator, supplier, distributor, materialman, or vendor having a direct contract with Contractor or with any Subcontractor to furnish materials or equipment to be incorporated in the Work by Contractor or a Subcontractor.

44. *Technical Data*—Those items expressly identified as Technical Data in the Supplementary Conditions, with respect to either (a) subsurface conditions at the Site, or physical conditions relating to existing surface or subsurface structures at the Site (except Underground Facilities) or (b) Hazardous Environmental Conditions at the Site. If no such express identifications of Technical Data have been made with respect to conditions at the Site, then the data contained in boring logs, recorded measurements of subsurface water levels, laboratory test results, and other factual, objective information regarding conditions at the Site that are set forth in any geotechnical or environmental report prepared for the Project and made available to Contractor are hereby defined as Technical Data with respect to conditions at the Site under Paragraphs 5.03, 5.04, and 5.06.

45. *Underground Facilities*—All underground pipelines, conduits, ducts, cables, wires, manholes, vaults, tanks, tunnels, or other such facilities or attachments, and any encasements containing such facilities, including but not limited to those that convey electricity, gases, steam, liquid petroleum products, telephone or other communications, fiber optic transmissions, cable television, water, wastewater, storm water, other liquids or chemicals, or traffic or other control systems.

46. *Unit Price Work*—Work to be paid for on the basis of unit prices.

47. *Work*—The entire construction or the various separately identifiable parts thereof required to be provided under the Contract Documents. Work includes and is the result of performing or providing all labor, services, and documentation necessary to produce such construction; furnishing, installing, and incorporating all materials and equipment into such construction; and may include related services such as testing, start-up, and commissioning, all as required by the Contract Documents.

48. *Work Change Directive*—A written directive to Contractor issued on or after the Effective Date of the Contract, signed by Owner and recommended by Engineer, ordering an addition, deletion, or revision in the Work.

Copyright © 2013 National Society of Professional Engineers, American Council of Engineering Companies, and American Society of Civil Engineers. All rights reserved.

1.02 *Terminology*

A. The words and terms discussed in the following paragraphs are not defined but, when used in the Bidding Requirements or Contract Documents, have the indicated meaning.

B. *Intent of Certain Terms or Adjectives*:

1. The Contract Documents include the terms "as allowed," "as approved," "as ordered," "as directed" or terms of like effect or import to authorize an exercise of professional judgment by Engineer. In addition, the adjectives "reasonable," "suitable," "acceptable," "proper," "satisfactory," or adjectives of like effect or import are used to describe an action or determination of Engineer as to the Work. It is intended that such exercise of professional judgment, action, or determination will be solely to evaluate, in general, the Work for compliance with the information in the Contract Documents and with the design concept of the Project as a functioning whole as shown or indicated in the Contract Documents (unless there is a specific statement indicating otherwise). The use of any such term or adjective is not intended to and shall not be effective to assign to Engineer any duty or authority to supervise or direct the performance of the Work, or any duty or authority to undertake responsibility contrary to the provisions of Article 10 or any other provision of the Contract Documents.

C. *Day*:

1. The word "day" means a calendar day of 24 hours measured from midnight to the next midnight.

D. *Defective*:

1. The word "defective," when modifying the word "Work," refers to Work that is unsatisfactory, faulty, or deficient in that it:

a. does not conform to the Contract Documents; or

b. does not meet the requirements of any applicable inspection, reference standard, test, or approval referred to in the Contract Documents; or

c. has been damaged prior to Engineer's recommendation of final payment (unless responsibility for the protection thereof has been assumed by Owner at Substantial Completion in accordance with Paragraph 15.03 or 15.04).

E. *Furnish, Install, Perform, Provide*:

1. The word "furnish," when used in connection with services, materials, or equipment, shall mean to supply and deliver said services, materials, or equipment to the Site (or some other specified location) ready for use or installation and in usable or operable condition.

2. The word "install," when used in connection with services, materials, or equipment, shall mean to put into use or place in final position said services, materials, or equipment complete and ready for intended use.

3. The words "perform" or "provide," when used in connection with services, materials, or equipment, shall mean to furnish and install said services, materials, or equipment complete and ready for intended use.

4. If the Contract Documents establish an obligation of Contractor with respect to specific services, materials, or equipment, but do not expressly use any of the four words

Copyright © 2013 National Society of Professional Engineers, American Council of Engineering Companies, and American Society of Civil Engineers. All rights reserved.

"furnish," "install," "perform," or "provide," then Contractor shall furnish and install said services, materials, or equipment complete and ready for intended use.

F. Unless stated otherwise in the Contract Documents, words or phrases that have a well-known technical or construction industry or trade meaning are used in the Contract Documents in accordance with such recognized meaning.

ARTICLE 2 – PRELIMINARY MATTERS

2.01 *Delivery of Bonds and Evidence of Insurance*

A. *Bonds*: When Contractor delivers the executed counterparts of the Agreement to Owner, Contractor shall also deliver to Owner such bonds as Contractor may be required to furnish.

B. *Evidence of Contractor's Insurance*: When Contractor delivers the executed counterparts of the Agreement to Owner, Contractor shall also deliver to Owner, with copies to each named insured and additional insured (as identified in the Supplementary Conditions or elsewhere in the Contract), the certificates and other evidence of insurance required to be provided by Contractor in accordance with Article 6.

C. *Evidence of Owner's Insurance*: After receipt of the executed counterparts of the Agreement and all required bonds and insurance documentation, Owner shall promptly deliver to Contractor, with copies to each named insured and additional insured (as identified in the Supplementary Conditions or otherwise), the certificates and other evidence of insurance required to be provided by Owner under Article 6.

2.02 *Copies of Documents*

A. Owner shall furnish to Contractor four printed copies of the Contract (including one fully executed counterpart of the Agreement), and one copy in electronic portable document format (PDF). Additional printed copies will be furnished upon request at the cost of reproduction.

B. Owner shall maintain and safeguard at least one original printed record version of the Contract, including Drawings and Specifications signed and sealed by Engineer and other design professionals. Owner shall make such original printed record version of the Contract available to Contractor for review. Owner may delegate the responsibilities under this provision to Engineer.

2.03 *Before Starting Construction*

A. *Preliminary Schedules*: Within 10 days after the Effective Date of the Contract (or as otherwise specifically required by the Contract Documents), Contractor shall submit to Engineer for timely review:

1. a preliminary Progress Schedule indicating the times (numbers of days or dates) for starting and completing the various stages of the Work, including any Milestones specified in the Contract;

2. a preliminary Schedule of Submittals; and

3. a preliminary Schedule of Values for all of the Work which includes quantities and prices of items which when added together equal the Contract Price and subdivides the Work into component parts in sufficient detail to serve as the basis for progress payments during performance of the Work. Such prices will include an appropriate amount of overhead and profit applicable to each item of Work.

Copyright © 2013 National Society of Professional Engineers, American Council of Engineering Companies, and American Society of Civil Engineers. All rights reserved.

2.04 *Preconstruction Conference; Designation of Authorized Representatives*

A. Before any Work at the Site is started, a conference attended by Owner, Contractor, Engineer, and others as appropriate will be held to establish a working understanding among the parties as to the Work and to discuss the schedules referred to in Paragraph 2.03.A, procedures for handling Shop Drawings, Samples, and other submittals, processing Applications for Payment, electronic or digital transmittals, and maintaining required records.

B. At this conference Owner and Contractor each shall designate, in writing, a specific individual to act as its authorized representative with respect to the services and responsibilities under the Contract. Such individuals shall have the authority to transmit and receive information, render decisions relative to the Contract, and otherwise act on behalf of each respective party.

2.05 *Initial Acceptance of Schedules*

A. At least 10 days before submission of the first Application for Payment a conference, attended by Contractor, Engineer, and others as appropriate, will be held to review for acceptability to Engineer as provided below the schedules submitted in accordance with Paragraph 2.03.A. Contractor shall have an additional 10 days to make corrections and adjustments and to complete and resubmit the schedules. No progress payment shall be made to Contractor until acceptable schedules are submitted to Engineer.

1. The Progress Schedule will be acceptable to Engineer if it provides an orderly progression of the Work to completion within the Contract Times. Such acceptance will not impose on Engineer responsibility for the Progress Schedule, for sequencing, scheduling, or progress of the Work, nor interfere with or relieve Contractor from Contractor's full responsibility therefor.

2. Contractor's Schedule of Submittals will be acceptable to Engineer if it provides a workable arrangement for reviewing and processing the required submittals.

3. Contractor's Schedule of Values will be acceptable to Engineer as to form and substance if it provides a reasonable allocation of the Contract Price to the component parts of the Work.

2.06 *Electronic Transmittals*

A. Except as otherwise stated elsewhere in the Contract, the Owner, Engineer, and Contractor may transmit, and shall accept, Project-related correspondence, text, data, documents, drawings, information, and graphics, including but not limited to Shop Drawings and other submittals, in electronic media or digital format, either directly, or through access to a secure Project website.

B. If the Contract does not establish protocols for electronic or digital transmittals, then Owner, Engineer, and Contractor shall jointly develop such protocols.

C. When transmitting items in electronic media or digital format, the transmitting party makes no representations as to long term compatibility, usability, or readability of the items resulting from the recipient's use of software application packages, operating systems, or computer hardware differing from those used in the drafting or transmittal of the items, or from those established in applicable transmittal protocols.

Copyright © 2013 National Society of Professional Engineers, American Council of Engineering Companies, and American Society of Civil Engineers. All rights reserved.

ARTICLE 3 – DOCUMENTS: INTENT, REQUIREMENTS, REUSE

3.01 *Intent*

A. The Contract Documents are complementary; what is required by one is as binding as if required by all.

B. It is the intent of the Contract Documents to describe a functionally complete project (or part thereof) to be constructed in accordance with the Contract Documents.

C. Unless otherwise stated in the Contract Documents, if there is a discrepancy between the electronic or digital versions of the Contract Documents (including any printed copies derived from such electronic or digital versions) and the printed record version, the printed record version shall govern.

D. The Contract supersedes prior negotiations, representations, and agreements, whether written or oral.

E. Engineer will issue clarifications and interpretations of the Contract Documents as provided herein.

3.02 *Reference Standards*

A. Standards Specifications, Codes, Laws and Regulations

1. Reference in the Contract Documents to standard specifications, manuals, reference standards, or codes of any technical society, organization, or association, or to Laws or Regulations, whether such reference be specific or by implication, shall mean the standard specification, manual, reference standard, code, or Laws or Regulations in effect at the time of opening of Bids (or on the Effective Date of the Contract if there were no Bids), except as may be otherwise specifically stated in the Contract Documents.

2. No provision of any such standard specification, manual, reference standard, or code, or any instruction of a Supplier, shall be effective to change the duties or responsibilities of Owner, Contractor, or Engineer, or any of their subcontractors, consultants, agents, or employees, from those set forth in the part of the Contract Documents prepared by or for Engineer. No such provision or instruction shall be effective to assign to Owner, Engineer, or any of their officers, directors, members, partners, employees, agents, consultants, or subcontractors, any duty or authority to supervise or direct the performance of the Work or any duty or authority to undertake responsibility inconsistent with the provisions of the part of the Contract Documents prepared by or for Engineer.

3.03 *Reporting and Resolving Discrepancies*

A. *Reporting Discrepancies*:

1. *Contractor's Verification of Figures and Field Measurements*: Before undertaking each part of the Work, Contractor shall carefully study the Contract Documents, and check and verify pertinent figures and dimensions therein, particularly with respect to applicable field measurements. Contractor shall promptly report in writing to Engineer any conflict, error, ambiguity, or discrepancy that Contractor discovers, or has actual knowledge of, and shall not proceed with any Work affected thereby until the conflict, error, ambiguity, or discrepancy is resolved, by a clarification or interpretation by Engineer, or by an amendment or supplement to the Contract Documents issued pursuant to Paragraph 11.01.

Copyright © 2013 National Society of Professional Engineers, American Council of Engineering Companies, and American Society of Civil Engineers. All rights reserved.

2. *Contractor's Review of Contract Documents*: If, before or during the performance of the Work, Contractor discovers any conflict, error, ambiguity, or discrepancy within the Contract Documents, or between the Contract Documents and (a) any applicable Law or Regulation, (b) actual field conditions, (c) any standard specification, manual, reference standard, or code, or (d) any instruction of any Supplier, then Contractor shall promptly report it to Engineer in writing. Contractor shall not proceed with the Work affected thereby (except in an emergency as required by Paragraph 7.15) until the conflict, error, ambiguity, or discrepancy is resolved, by a clarification or interpretation by Engineer, or by an amendment or supplement to the Contract Documents issued pursuant to Paragraph 11.01.

3. Contractor shall not be liable to Owner or Engineer for failure to report any conflict, error, ambiguity, or discrepancy in the Contract Documents unless Contractor had actual knowledge thereof.

B. *Resolving Discrepancies*:

1. Except as may be otherwise specifically stated in the Contract Documents, the provisions of the part of the Contract Documents prepared by or for Engineer shall take precedence in resolving any conflict, error, ambiguity, or discrepancy between such provisions of the Contract Documents and:

   a. the provisions of any standard specification, manual, reference standard, or code, or the instruction of any Supplier (whether or not specifically incorporated by reference as a Contract Document); or

   b. the provisions of any Laws or Regulations applicable to the performance of the Work (unless such an interpretation of the provisions of the Contract Documents would result in violation of such Law or Regulation).

3.04 *Requirements of the Contract Documents*

A. During the performance of the Work and until final payment, Contractor and Owner shall submit to the Engineer all matters in question concerning the requirements of the Contract Documents (sometimes referred to as requests for information or interpretation—RFIs), or relating to the acceptability of the Work under the Contract Documents, as soon as possible after such matters arise. Engineer will be the initial interpreter of the requirements of the Contract Documents, and judge of the acceptability of the Work thereunder.

B. Engineer will, with reasonable promptness, render a written clarification, interpretation, or decision on the issue submitted, or initiate an amendment or supplement to the Contract Documents. Engineer's written clarification, interpretation, or decision will be final and binding on Contractor, unless it appeals by submitting a Change Proposal, and on Owner, unless it appeals by filing a Claim.

C. If a submitted matter in question concerns terms and conditions of the Contract Documents that do not involve (1) the performance or acceptability of the Work under the Contract Documents, (2) the design (as set forth in the Drawings, Specifications, or otherwise), or (3) other engineering or technical matters, then Engineer will promptly give written notice to Owner and Contractor that Engineer is unable to provide a decision or interpretation. If Owner and Contractor are unable to agree on resolution of such a matter in question, either party may pursue resolution as provided in Article 12.

Copyright © 2013 National Society of Professional Engineers, American Council of Engineering Companies, and American Society of Civil Engineers. All rights reserved.

3.05 *Reuse of Documents*

A. Contractor and its Subcontractors and Suppliers shall not:

1. have or acquire any title to or ownership rights in any of the Drawings, Specifications, or other documents (or copies of any thereof) prepared by or bearing the seal of Engineer or its consultants, including electronic media editions, or reuse any such Drawings, Specifications, other documents, or copies thereof on extensions of the Project or any other project without written consent of Owner and Engineer and specific written verification or adaptation by Engineer; or

2. have or acquire any title or ownership rights in any other Contract Documents, reuse any such Contract Documents for any purpose without Owner's express written consent, or violate any copyrights pertaining to such Contract Documents.

B. The prohibitions of this Paragraph 3.05 will survive final payment, or termination of the Contract. Nothing herein shall preclude Contractor from retaining copies of the Contract Documents for record purposes.

ARTICLE 4 – COMMENCEMENT AND PROGRESS OF THE WORK

4.01 *Commencement of Contract Times; Notice to Proceed*

A. The Contract Times will commence to run on the thirtieth day after the Effective Date of the Contract or, if a Notice to Proceed is given, on the day indicated in the Notice to Proceed. A Notice to Proceed may be given at any time within 30 days after the Effective Date of the Contract. In no event will the Contract Times commence to run later than the sixtieth day after the day of Bid opening or the thirtieth day after the Effective Date of the Contract, whichever date is earlier.

4.02 *Starting the Work*

A. Contractor shall start to perform the Work on the date when the Contract Times commence to run. No Work shall be done at the Site prior to such date.

4.03 *Reference Points*

A. Owner shall provide engineering surveys to establish reference points for construction which in Engineer's judgment are necessary to enable Contractor to proceed with the Work. Contractor shall be responsible for laying out the Work, shall protect and preserve the established reference points and property monuments, and shall make no changes or relocations without the prior written approval of Owner. Contractor shall report to Engineer whenever any reference point or property monument is lost or destroyed or requires relocation because of necessary changes in grades or locations, and shall be responsible for the accurate replacement or relocation of such reference points or property monuments by professionally qualified personnel.

4.04 *Progress Schedule*

A. Contractor shall adhere to the Progress Schedule established in accordance with Paragraph 2.05 as it may be adjusted from time to time as provided below.

1. Contractor shall submit to Engineer for acceptance (to the extent indicated in Paragraph 2.05) proposed adjustments in the Progress Schedule that will not result in changing the Contract Times.

Copyright © 2013 National Society of Professional Engineers, American Council of Engineering Companies, and American Society of Civil Engineers. All rights reserved.

2. Proposed adjustments in the Progress Schedule that will change the Contract Times shall be submitted in accordance with the requirements of Article 11.

B. Contractor shall carry on the Work and adhere to the Progress Schedule during all disputes or disagreements with Owner. No Work shall be delayed or postponed pending resolution of any disputes or disagreements, or during any appeal process, except as permitted by Paragraph 16.04, or as Owner and Contractor may otherwise agree in writing.

4.05 *Delays in Contractor's Progress*

A. If Owner, Engineer, or anyone for whom Owner is responsible, delays, disrupts, or interferes with the performance or progress of the Work, then Contractor shall be entitled to an equitable adjustment in the Contract Times and Contract Price. Contractor's entitlement to an adjustment of the Contract Times is conditioned on such adjustment being essential to Contractor's ability to complete the Work within the Contract Times.

B. Contractor shall not be entitled to an adjustment in Contract Price or Contract Times for delay, disruption, or interference caused by or within the control of Contractor. Delay, disruption, and interference attributable to and within the control of a Subcontractor or Supplier shall be deemed to be within the control of Contractor.

C. If Contractor's performance or progress is delayed, disrupted, or interfered with by unanticipated causes not the fault of and beyond the control of Owner, Contractor, and those for which they are responsible, then Contractor shall be entitled to an equitable adjustment in Contract Times. Contractor's entitlement to an adjustment of the Contract Times is conditioned on such adjustment being essential to Contractor's ability to complete the Work within the Contract Times. Such an adjustment shall be Contractor's sole and exclusive remedy for the delays, disruption, and interference described in this paragraph. Causes of delay, disruption, or interference that may give rise to an adjustment in Contract Times under this paragraph include but are not limited to the following:

1. severe and unavoidable natural catastrophes such as fires, floods, epidemics, and earthquakes;

2. abnormal weather conditions;

3. acts or failures to act of utility owners (other than those performing other work at or adjacent to the Site by arrangement with the Owner, as contemplated in Article 8); and

4. acts of war or terrorism.

D. Delays, disruption, and interference to the performance or progress of the Work resulting from the existence of a differing subsurface or physical condition, an Underground Facility that was not shown or indicated by the Contract Documents, or not shown or indicated with reasonable accuracy, and those resulting from Hazardous Environmental Conditions, are governed by Article 5.

E. Paragraph 8.03 governs delays, disruption, and interference to the performance or progress of the Work resulting from the performance of certain other work at or adjacent to the Site.

F. Contractor shall not be entitled to an adjustment in Contract Price or Contract Times for any delay, disruption, or interference if such delay is concurrent with a delay, disruption, or interference caused by or within the control of Contractor.

G. Contractor must submit any Change Proposal seeking an adjustment in Contract Price or Contract Times under this paragraph within 30 days of the commencement of the delaying, disrupting, or interfering event.

Copyright © 2013 National Society of Professional Engineers, American Council of Engineering Companies, and American Society of Civil Engineers. All rights reserved.

ARTICLE 5 – AVAILABILITY OF LANDS; SUBSURFACE AND PHYSICAL CONDITIONS; HAZARDOUS ENVIRONMENTAL CONDITIONS

5.01 *Availability of Lands*

A. Owner shall furnish the Site. Owner shall notify Contractor of any encumbrances or restrictions not of general application but specifically related to use of the Site with which Contractor must comply in performing the Work.

B. Upon reasonable written request, Owner shall furnish Contractor with a current statement of record legal title and legal description of the lands upon which permanent improvements are to be made and Owner's interest therein as necessary for giving notice of or filing a mechanic's or construction lien against such lands in accordance with applicable Laws and Regulations.

C. Contractor shall provide for all additional lands and access thereto that may be required for temporary construction facilities or storage of materials and equipment.

5.02 *Use of Site and Other Areas*

A. *Limitation on Use of Site and Other Areas*:

1. Contractor shall confine construction equipment, temporary construction facilities, the storage of materials and equipment, and the operations of workers to the Site, adjacent areas that Contractor has arranged to use through construction easements or otherwise, and other adjacent areas permitted by Laws and Regulations, and shall not unreasonably encumber the Site and such other adjacent areas with construction equipment or other materials or equipment. Contractor shall assume full responsibility for (a) damage to the Site; (b) damage to any such other adjacent areas used for Contractor's operations; (c) damage to any other adjacent land or areas; and (d) for injuries and losses sustained by the owners or occupants of any such land or areas; provided that such damage or injuries result from the performance of the Work or from other actions or conduct of the Contractor or those for which Contractor is responsible.

2. If a damage or injury claim is made by the owner or occupant of any such land or area because of the performance of the Work, or because of other actions or conduct of the Contractor or those for which Contractor is responsible, Contractor shall (a) take immediate corrective or remedial action as required by Paragraph 7.12, or otherwise; (b) promptly attempt to settle the claim as to all parties through negotiations with such owner or occupant, or otherwise resolve the claim by arbitration or other dispute resolution proceeding, or at law; and (c) to the fullest extent permitted by Laws and Regulations, indemnify and hold harmless Owner and Engineer, and the officers, directors, members, partners, employees, agents, consultants and subcontractors of each and any of them from and against any such claim, and against all costs, losses, and damages (including but not limited to all fees and charges of engineers, architects, attorneys, and other professionals and all court or arbitration or other dispute resolution costs) arising out of or relating to any claim or action, legal or equitable, brought by any such owner or occupant against Owner, Engineer, or any other party indemnified hereunder to the extent caused directly or indirectly, in whole or in part by, or based upon, Contractor's performance of the Work, or because of other actions or conduct of the Contractor or those for which Contractor is responsible.

B. *Removal of Debris During Performance of the Work*: During the progress of the Work the Contractor shall keep the Site and other adjacent areas free from accumulations of waste

Copyright © 2013 National Society of Professional Engineers, American Council of Engineering Companies, and American Society of Civil Engineers. All rights reserved.

materials, rubbish, and other debris. Removal and disposal of such waste materials, rubbish, and other debris shall conform to applicable Laws and Regulations.

C. *Cleaning*: Prior to Substantial Completion of the Work Contractor shall clean the Site and the Work and make it ready for utilization by Owner. At the completion of the Work Contractor shall remove from the Site and adjacent areas all tools, appliances, construction equipment and machinery, and surplus materials and shall restore to original condition all property not designated for alteration by the Contract Documents.

D. *Loading of Structures*: Contractor shall not load nor permit any part of any structure to be loaded in any manner that will endanger the structure, nor shall Contractor subject any part of the Work or adjacent structures or land to stresses or pressures that will endanger them.

5.03 *Subsurface and Physical Conditions*

A. *Reports and Drawings*: The Supplementary Conditions identify:

1. those reports known to Owner of explorations and tests of subsurface conditions at or adjacent to the Site;

2. those drawings known to Owner of physical conditions relating to existing surface or subsurface structures at the Site (except Underground Facilities); and

3. Technical Data contained in such reports and drawings.

B. *Reliance by Contractor on Technical Data Authorized*: Contractor may rely upon the accuracy of the Technical Data expressly identified in the Supplementary Conditions with respect to such reports and drawings, but such reports and drawings are not Contract Documents. If no such express identification has been made, then Contractor may rely upon the accuracy of the Technical Data (as defined in Article 1) contained in any geotechnical or environmental report prepared for the Project and made available to Contractor. Except for such reliance on Technical Data, Contractor may not rely upon or make any claim against Owner or Engineer, or any of their officers, directors, members, partners, employees, agents, consultants, or subcontractors, with respect to:

1. the completeness of such reports and drawings for Contractor's purposes, including, but not limited to, any aspects of the means, methods, techniques, sequences, and procedures of construction to be employed by Contractor, and safety precautions and programs incident thereto; or

2. other data, interpretations, opinions, and information contained in such reports or shown or indicated in such drawings; or

3. any Contractor interpretation of or conclusion drawn from any Technical Data or any such other data, interpretations, opinions, or information.

5.04 *Differing Subsurface or Physical Conditions*

A. *Notice by Contractor*: If Contractor believes that any subsurface or physical condition that is uncovered or revealed at the Site either:

1. is of such a nature as to establish that any Technical Data on which Contractor is entitled to rely as provided in Paragraph 5.03 is materially inaccurate; or

2. is of such a nature as to require a change in the Drawings or Specifications; or

3. differs materially from that shown or indicated in the Contract Documents; or

Copyright © 2013 National Society of Professional Engineers, American Council of Engineering Companies, and American Society of Civil Engineers. All rights reserved.

4. is of an unusual nature, and differs materially from conditions ordinarily encountered and generally recognized as inherent in work of the character provided for in the Contract Documents;

then Contractor shall, promptly after becoming aware thereof and before further disturbing the subsurface or physical conditions or performing any Work in connection therewith (except in an emergency as required by Paragraph 7.15), notify Owner and Engineer in writing about such condition. Contractor shall not further disturb such condition or perform any Work in connection therewith (except with respect to an emergency) until receipt of a written statement permitting Contractor to do so.

B. *Engineer's Review*: After receipt of written notice as required by the preceding paragraph, Engineer will promptly review the subsurface or physical condition in question; determine the necessity of Owner's obtaining additional exploration or tests with respect to the condition; conclude whether the condition falls within any one or more of the differing site condition categories in Paragraph 5.04.A above; obtain any pertinent cost or schedule information from Contractor; prepare recommendations to Owner regarding the Contractor's resumption of Work in connection with the subsurface or physical condition in question and the need for any change in the Drawings or Specifications; and advise Owner in writing of Engineer's findings, conclusions, and recommendations.

C. *Owner's Statement to Contractor Regarding Site Condition*: After receipt of Engineer's written findings, conclusions, and recommendations, Owner shall issue a written statement to Contractor (with a copy to Engineer) regarding the subsurface or physical condition in question, addressing the resumption of Work in connection with such condition, indicating whether any change in the Drawings or Specifications will be made, and adopting or rejecting Engineer's written findings, conclusions, and recommendations, in whole or in part.

D. *Possible Price and Times Adjustments*:

1. Contractor shall be entitled to an equitable adjustment in Contract Price or Contract Times, or both, to the extent that the existence of a differing subsurface or physical condition, or any related delay, disruption, or interference, causes an increase or decrease in Contractor's cost of, or time required for, performance of the Work; subject, however, to the following:

   a. such condition must fall within any one or more of the categories described in Paragraph 5.04.A;

   b. with respect to Work that is paid for on a unit price basis, any adjustment in Contract Price will be subject to the provisions of Paragraph 13.03; and,

   c. Contractor's entitlement to an adjustment of the Contract Times is conditioned on such adjustment being essential to Contractor's ability to complete the Work within the Contract Times.

2. Contractor shall not be entitled to any adjustment in the Contract Price or Contract Times with respect to a subsurface or physical condition if:

   a. Contractor knew of the existence of such condition at the time Contractor made a commitment to Owner with respect to Contract Price and Contract Times by the submission of a Bid or becoming bound under a negotiated contract, or otherwise; or

   b. the existence of such condition reasonably could have been discovered or revealed as a result of any examination, investigation, exploration, test, or study of the Site

Copyright © 2013 National Society of Professional Engineers, American Council of Engineering Companies, and American Society of Civil Engineers. All rights reserved.

and contiguous areas expressly required by the Bidding Requirements or Contract Documents to be conducted by or for Contractor prior to Contractor's making such commitment; or

c. Contractor failed to give the written notice as required by Paragraph 5.04.A.

3. If Owner and Contractor agree regarding Contractor's entitlement to and the amount or extent of any adjustment in the Contract Price or Contract Times, or both, then any such adjustment shall be set forth in a Change Order.

4. Contractor may submit a Change Proposal regarding its entitlement to or the amount or extent of any adjustment in the Contract Price or Contract Times, or both, no later than 30 days after Owner's issuance of the Owner's written statement to Contractor regarding the subsurface or physical condition in question.

5.05 *Underground Facilities*

A. *Contractor's Responsibilities*: The information and data shown or indicated in the Contract Documents with respect to existing Underground Facilities at or adjacent to the Site is based on information and data furnished to Owner or Engineer by the owners of such Underground Facilities, including Owner, or by others. Unless it is otherwise expressly provided in the Supplementary Conditions:

1. Owner and Engineer do not warrant or guarantee the accuracy or completeness of any such information or data provided by others; and

2. the cost of all of the following will be included in the Contract Price, and Contractor shall have full responsibility for:

a. reviewing and checking all information and data regarding existing Underground Facilities at the Site;

b. locating all Underground Facilities shown or indicated in the Contract Documents as being at the Site;

c. coordination of the Work with the owners (including Owner) of such Underground Facilities, during construction; and

d. the safety and protection of all existing Underground Facilities at the Site, and repairing any damage thereto resulting from the Work.

B. *Notice by Contractor*: If Contractor believes that an Underground Facility that is uncovered or revealed at the Site was not shown or indicated in the Contract Documents, or was not shown or indicated with reasonable accuracy, then Contractor shall, promptly after becoming aware thereof and before further disturbing conditions affected thereby or performing any Work in connection therewith (except in an emergency as required by Paragraph 7.15), identify the owner of such Underground Facility and give written notice to that owner and to Owner and Engineer.

C. *Engineer's Review*: Engineer will promptly review the Underground Facility and conclude whether such Underground Facility was not shown or indicated in the Contract Documents, or was not shown or indicated with reasonable accuracy; obtain any pertinent cost or schedule information from Contractor; prepare recommendations to Owner regarding the Contractor's resumption of Work in connection with the Underground Facility in question; determine the extent, if any, to which a change is required in the Drawings or Specifications to reflect and document the consequences of the existence or location of the Underground Facility; and advise Owner in writing of Engineer's findings, conclusions, and

Copyright © 2013 National Society of Professional Engineers, American Council of Engineering Companies, and American Society of Civil Engineers. All rights reserved.

recommendations. During such time, Contractor shall be responsible for the safety and protection of such Underground Facility.

D. *Owner's Statement to Contractor Regarding Underground Facility*: After receipt of Engineer's written findings, conclusions, and recommendations, Owner shall issue a written statement to Contractor (with a copy to Engineer) regarding the Underground Facility in question, addressing the resumption of Work in connection with such Underground Facility, indicating whether any change in the Drawings or Specifications will be made, and adopting or rejecting Engineer's written findings, conclusions, and recommendations in whole or in part.

E. *Possible Price and Times Adjustments*:

1. Contractor shall be entitled to an equitable adjustment in the Contract Price or Contract Times, or both, to the extent that any existing Underground Facility at the Site that was not shown or indicated in the Contract Documents, or was not shown or indicated with reasonable accuracy, or any related delay, disruption, or interference, causes an increase or decrease in Contractor's cost of, or time required for, performance of the Work; subject, however, to the following:

   a. Contractor did not know of and could not reasonably have been expected to be aware of or to have anticipated the existence or actual location of the Underground Facility in question;

   b. With respect to Work that is paid for on a unit price basis, any adjustment in Contract Price will be subject to the provisions of Paragraph 13.03;

   c. Contractor's entitlement to an adjustment of the Contract Times is conditioned on such adjustment being essential to Contractor's ability to complete the Work within the Contract Times; and

   d. Contractor gave the notice required in Paragraph 5.05.B.

2. If Owner and Contractor agree regarding Contractor's entitlement to and the amount or extent of any adjustment in the Contract Price or Contract Times, or both, then any such adjustment shall be set forth in a Change Order.

3. Contractor may submit a Change Proposal regarding its entitlement to or the amount or extent of any adjustment in the Contract Price or Contract Times, or both, no later than 30 days after Owner's issuance of the Owner's written statement to Contractor regarding the Underground Facility in question.

5.06 *Hazardous Environmental Conditions at Site*

A. *Reports and Drawings*: The Supplementary Conditions identify:

1. those reports and drawings known to Owner relating to Hazardous Environmental Conditions that have been identified at or adjacent to the Site; and

2. Technical Data contained in such reports and drawings.

B. *Reliance by Contractor on Technical Data Authorized*: Contractor may rely upon the accuracy of the Technical Data expressly identified in the Supplementary Conditions with respect to such reports and drawings, but such reports and drawings are not Contract Documents. If no such express identification has been made, then Contractor may rely on the accuracy of the Technical Data (as defined in Article 1) contained in any geotechnical or environmental report prepared for the Project and made available to Contractor. Except for such reliance on Technical Data, Contractor may not rely upon or make any claim against Owner or Engineer,

Copyright © 2013 National Society of Professional Engineers, American Council of Engineering Companies, and American Society of Civil Engineers. All rights reserved.

or any of their officers, directors, members, partners, employees, agents, consultants, or subcontractors with respect to:

1. the completeness of such reports and drawings for Contractor's purposes, including, but not limited to, any aspects of the means, methods, techniques, sequences and procedures of construction to be employed by Contractor and safety precautions and programs incident thereto; or
2. other data, interpretations, opinions and information contained in such reports or shown or indicated in such drawings; or
3. any Contractor interpretation of or conclusion drawn from any Technical Data or any such other data, interpretations, opinions or information.

C. Contractor shall not be responsible for removing or remediating any Hazardous Environmental Condition encountered, uncovered, or revealed at the Site unless such removal or remediation is expressly identified in the Contract Documents to be within the scope of the Work.

D. Contractor shall be responsible for controlling, containing, and duly removing all Constituents of Concern brought to the Site by Contractor, Subcontractors, Suppliers, or anyone else for whom Contractor is responsible, and for any associated costs; and for the costs of removing and remediating any Hazardous Environmental Condition created by the presence of any such Constituents of Concern.

E. If Contractor encounters, uncovers, or reveals a Hazardous Environmental Condition whose removal or remediation is not expressly identified in the Contract Documents as being within the scope of the Work, or if Contractor or anyone for whom Contractor is responsible creates a Hazardous Environmental Condition, then Contractor shall immediately: (1) secure or otherwise isolate such condition; (2) stop all Work in connection with such condition and in any area affected thereby (except in an emergency as required by Paragraph 7.15); and (3) notify Owner and Engineer (and promptly thereafter confirm such notice in writing). Owner shall promptly consult with Engineer concerning the necessity for Owner to retain a qualified expert to evaluate such condition or take corrective action, if any. Promptly after consulting with Engineer, Owner shall take such actions as are necessary to permit Owner to timely obtain required permits and provide Contractor the written notice required by Paragraph 5.06.F. If Contractor or anyone for whom Contractor is responsible created the Hazardous Environmental Condition in question, then Owner may remove and remediate the Hazardous Environmental Condition, and impose a set-off against payments to account for the associated costs.

F. Contractor shall not resume Work in connection with such Hazardous Environmental Condition or in any affected area until after Owner has obtained any required permits related thereto, and delivered written notice to Contractor either (1) specifying that such condition and any affected area is or has been rendered safe for the resumption of Work, or (2) specifying any special conditions under which such Work may be resumed safely.

G. If Owner and Contractor cannot agree as to entitlement to or on the amount or extent, if any, of any adjustment in Contract Price or Contract Times, or both, as a result of such Work stoppage or such special conditions under which Work is agreed to be resumed by Contractor, then within 30 days of Owner's written notice regarding the resumption of Work, Contractor may submit a Change Proposal, or Owner may impose a set-off.

H. If after receipt of such written notice Contractor does not agree to resume such Work based on a reasonable belief it is unsafe, or does not agree to resume such Work under such special

Copyright © 2013 National Society of Professional Engineers, American Council of Engineering Companies, and American Society of Civil Engineers. All rights reserved.

conditions, then Owner may order the portion of the Work that is in the area affected by such condition to be deleted from the Work, following the contractual change procedures in Article 11. Owner may have such deleted portion of the Work performed by Owner's own forces or others in accordance with Article 8.

I. To the fullest extent permitted by Laws and Regulations, Owner shall indemnify and hold harmless Contractor, Subcontractors, and Engineer, and the officers, directors, members, partners, employees, agents, consultants, and subcontractors of each and any of them from and against all claims, costs, losses, and damages (including but not limited to all fees and charges of engineers, architects, attorneys, and other professionals and all court or arbitration or other dispute resolution costs) arising out of or relating to a Hazardous Environmental Condition, provided that such Hazardous Environmental Condition (1) was not shown or indicated in the Drawings, Specifications, or other Contract Documents, identified as Technical Data entitled to limited reliance pursuant to Paragraph 5.06.B, or identified in the Contract Documents to be included within the scope of the Work, and (2) was not created by Contractor or by anyone for whom Contractor is responsible. Nothing in this Paragraph 5.06.H shall obligate Owner to indemnify any individual or entity from and against the consequences of that individual's or entity's own negligence.

J. To the fullest extent permitted by Laws and Regulations, Contractor shall indemnify and hold harmless Owner and Engineer, and the officers, directors, members, partners, employees, agents, consultants, and subcontractors of each and any of them from and against all claims, costs, losses, and damages (including but not limited to all fees and charges of engineers, architects, attorneys, and other professionals and all court or arbitration or other dispute resolution costs) arising out of or relating to the failure to control, contain, or remove a Constituent of Concern brought to the Site by Contractor or by anyone for whom Contractor is responsible, or to a Hazardous Environmental Condition created by Contractor or by anyone for whom Contractor is responsible. Nothing in this Paragraph 5.06.J shall obligate Contractor to indemnify any individual or entity from and against the consequences of that individual's or entity's own negligence.

K. The provisions of Paragraphs 5.03, 5.04, and 5.05 do not apply to the presence of Constituents of Concern or to a Hazardous Environmental Condition uncovered or revealed at the Site.

ARTICLE 6 – BONDS AND INSURANCE

6.01 *Performance, Payment, and Other Bonds*

A. Contractor shall furnish a performance bond and a payment bond, each in an amount at least equal to the Contract Price, as security for the faithful performance and payment of all of Contractor's obligations under the Contract. These bonds shall remain in effect until one year after the date when final payment becomes due or until completion of the correction period specified in Paragraph 15.08, whichever is later, except as provided otherwise by Laws or Regulations, the Supplementary Conditions, or other specific provisions of the Contract. Contractor shall also furnish such other bonds as are required by the Supplementary Conditions or other specific provisions of the Contract.

B. All bonds shall be in the form prescribed by the Contract except as provided otherwise by Laws or Regulations, and shall be executed by such sureties as are named in "Companies Holding Certificates of Authority as Acceptable Sureties on Federal Bonds and as Acceptable Reinsuring Companies" as published in Circular 570 (as amended and supplemented) by the Financial Management Service, Surety Bond Branch, U.S. Department of the Treasury. A bond

Copyright © 2013 National Society of Professional Engineers, American Council of Engineering Companies, and American Society of Civil Engineers. All rights reserved.

signed by an agent or attorney-in-fact must be accompanied by a certified copy of that individual's authority to bind the surety. The evidence of authority shall show that it is effective on the date the agent or attorney-in-fact signed the accompanying bond.

C. Contractor shall obtain the required bonds from surety companies that are duly licensed or authorized in the jurisdiction in which the Project is located to issue bonds in the required amounts.

D. If the surety on a bond furnished by Contractor is declared bankrupt or becomes insolvent, or its right to do business is terminated in any state or jurisdiction where any part of the Project is located, or the surety ceases to meet the requirements above, then Contractor shall promptly notify Owner and Engineer and shall, within 20 days after the event giving rise to such notification, provide another bond and surety, both of which shall comply with the bond and surety requirements above.

E. If Contractor has failed to obtain a required bond, Owner may exclude the Contractor from the Site and exercise Owner's termination rights under Article 16.

F. Upon request, Owner shall provide a copy of the payment bond to any Subcontractor, Supplier, or other person or entity claiming to have furnished labor or materials used in the performance of the Work.

6.02 *Insurance—General Provisions*

A. Owner and Contractor shall obtain and maintain insurance as required in this Article and in the Supplementary Conditions.

B. All insurance required by the Contract to be purchased and maintained by Owner or Contractor shall be obtained from insurance companies that are duly licensed or authorized, in the state or jurisdiction in which the Project is located, to issue insurance policies for the required limits and coverages. Unless a different standard is indicated in the Supplementary Conditions, all companies that provide insurance policies required under this Contract shall have an A.M. Best rating of A-VII or better.

C. Contractor shall deliver to Owner, with copies to each named insured and additional insured (as identified in this Article, in the Supplementary Conditions, or elsewhere in the Contract), certificates of insurance establishing that Contractor has obtained and is maintaining the policies, coverages, and endorsements required by the Contract. Upon request by Owner or any other insured, Contractor shall also furnish other evidence of such required insurance, including but not limited to copies of policies and endorsements, and documentation of applicable self-insured retentions and deductibles. Contractor may block out (redact) any confidential premium or pricing information contained in any policy or endorsement furnished under this provision.

D. Owner shall deliver to Contractor, with copies to each named insured and additional insured (as identified in this Article, the Supplementary Conditions, or elsewhere in the Contract), certificates of insurance establishing that Owner has obtained and is maintaining the policies, coverages, and endorsements required of Owner by the Contract (if any). Upon request by Contractor or any other insured, Owner shall also provide other evidence of such required insurance (if any), including but not limited to copies of policies and endorsements, and documentation of applicable self-insured retentions and deductibles. Owner may block out (redact) any confidential premium or pricing information contained in any policy or endorsement furnished under this provision.

E. Failure of Owner or Contractor to demand such certificates or other evidence of the other party's full compliance with these insurance requirements, or failure of Owner or Contractor

Copyright © 2013 National Society of Professional Engineers, American Council of Engineering Companies, and American Society of Civil Engineers. All rights reserved.

to identify a deficiency in compliance from the evidence provided, shall not be construed as a waiver of the other party's obligation to obtain and maintain such insurance.

F. If either party does not purchase or maintain all of the insurance required of such party by the Contract, such party shall notify the other party in writing of such failure to purchase prior to the start of the Work, or of such failure to maintain prior to any change in the required coverage.

G. If Contractor has failed to obtain and maintain required insurance, Owner may exclude the Contractor from the Site, impose an appropriate set-off against payment, and exercise Owner's termination rights under Article 16.

H. Without prejudice to any other right or remedy, if a party has failed to obtain required insurance, the other party may elect to obtain equivalent insurance to protect such other party's interests at the expense of the party who was required to provide such coverage, and the Contract Price shall be adjusted accordingly.

I. Owner does not represent that insurance coverage and limits established in this Contract necessarily will be adequate to protect Contractor or Contractor's interests.

J. The insurance and insurance limits required herein shall not be deemed as a limitation on Contractor's liability under the indemnities granted to Owner and other individuals and entities in the Contract.

6.03 *Contractor's Insurance*

A. *Workers' Compensation*: Contractor shall purchase and maintain workers' compensation and employer's liability insurance for:

1. claims under workers' compensation, disability benefits, and other similar employee benefit acts.

2. United States Longshoreman and Harbor Workers' Compensation Act and Jones Act coverage (if applicable).

3. claims for damages because of bodily injury, occupational sickness or disease, or death of Contractor's employees (by stop-gap endorsement in monopolist worker's compensation states).

4. Foreign voluntary worker compensation (if applicable).

B. *Commercial General Liability—Claims Covered*: Contractor shall purchase and maintain commercial general liability insurance, covering all operations by or on behalf of Contractor, on an occurrence basis, against:

1. claims for damages because of bodily injury, sickness or disease, or death of any person other than Contractor's employees.

2. claims for damages insured by reasonably available personal injury liability coverage.

3. claims for damages, other than to the Work itself, because of injury to or destruction of tangible property wherever located, including loss of use resulting therefrom.

C. *Commercial General Liability—Form and Content*: Contractor's commercial liability policy shall be written on a 1996 (or later) ISO commercial general liability form (occurrence form) and include the following coverages and endorsements:

1. Products and completed operations coverage:

a. Such insurance shall be maintained for three years after final payment.

Copyright © 2013 National Society of Professional Engineers, American Council of Engineering Companies, and American Society of Civil Engineers. All rights reserved.

b. Contractor shall furnish Owner and each other additional insured (as identified in the Supplementary Conditions or elsewhere in the Contract) evidence of continuation of such insurance at final payment and three years thereafter.

2. Blanket contractual liability coverage, to the extent permitted by law, including but not limited to coverage of Contractor's contractual indemnity obligations in Paragraph 7.18.

3. Broad form property damage coverage.

4. Severability of interest.

5. Underground, explosion, and collapse coverage.

6. Personal injury coverage.

7. Additional insured endorsements that include both ongoing operations and products and completed operations coverage through ISO Endorsements CG 20 10 10 01 and CG 20 37 10 01 (together); or CG 20 10 07 04 and CG 20 37 07 04 (together); or their equivalent.

8. For design professional additional insureds, ISO Endorsement CG 20 32 07 04, "Additional Insured—Engineers, Architects or Surveyors Not Engaged by the Named Insured" or its equivalent.

D. *Automobile liability*: Contractor shall purchase and maintain automobile liability insurance against claims for damages because of bodily injury or death of any person or property damage arising out of the ownership, maintenance, or use of any motor vehicle. The automobile liability policy shall be written on an occurrence basis.

E. *Umbrella or excess liability*: Contractor shall purchase and maintain umbrella or excess liability insurance written over the underlying employer's liability, commercial general liability, and automobile liability insurance described in the paragraphs above. Subject to industry-standard exclusions, the coverage afforded shall follow form as to each and every one of the underlying policies.

F. *Contractor's pollution liability insurance*: Contractor shall purchase and maintain a policy covering third-party injury and property damage claims, including clean-up costs, as a result of pollution conditions arising from Contractor's operations and completed operations. This insurance shall be maintained for no less than three years after final completion.

G. *Additional insureds*: The Contractor's commercial general liability, automobile liability, umbrella or excess, and pollution liability policies shall include and list as additional insureds Owner and Engineer, and any individuals or entities identified in the Supplementary Conditions; include coverage for the respective officers, directors, members, partners, employees, agents, consultants, and subcontractors of each and any of all such additional insureds; and the insurance afforded to these additional insureds shall provide primary coverage for all claims covered thereby (including as applicable those arising from both ongoing and completed operations) on a non-contributory basis. Contractor shall obtain all necessary endorsements to support these requirements.

H. *Contractor's professional liability insurance*: If Contractor will provide or furnish professional services under this Contract, through a delegation of professional design services or otherwise, then Contractor shall be responsible for purchasing and maintaining applicable professional liability insurance. This insurance shall provide protection against claims arising out of performance of professional design or related services, and caused by a negligent error, omission, or act for which the insured party is legally liable. It shall be maintained throughout the duration of the Contract and for a minimum of two years after Substantial

Copyright © 2013 National Society of Professional Engineers, American Council of Engineering Companies, and American Society of Civil Engineers. All rights reserved.

Completion. If such professional design services are performed by a Subcontractor, and not by Contractor itself, then the requirements of this paragraph may be satisfied through the purchasing and maintenance of such insurance by such Subcontractor.

I. *General provisions*: The policies of insurance required by this Paragraph 6.03 shall:

1. include at least the specific coverages provided in this Article.
2. be written for not less than the limits of liability provided in this Article and in the Supplementary Conditions, or required by Laws or Regulations, whichever is greater.
3. contain a provision or endorsement that the coverage afforded will not be canceled, materially changed, or renewal refused until at least 10 days prior written notice has been given to Contractor. Within three days of receipt of any such written notice, Contractor shall provide a copy of the notice to Owner, Engineer, and each other insured under the policy.
4. remain in effect at least until final payment (and longer if expressly required in this Article) and at all times thereafter when Contractor may be correcting, removing, or replacing defective Work as a warranty or correction obligation, or otherwise, or returning to the Site to conduct other tasks arising from the Contract Documents.
5. be appropriate for the Work being performed and provide protection from claims that may arise out of or result from Contractor's performance of the Work and Contractor's other obligations under the Contract Documents, whether it is to be performed by Contractor, any Subcontractor or Supplier, or by anyone directly or indirectly employed by any of them to perform any of the Work, or by anyone for whose acts any of them may be liable.

J. The coverage requirements for specific policies of insurance must be met by such policies, and not by reference to excess or umbrella insurance provided in other policies.

6.04 *Owner's Liability Insurance*

A. In addition to the insurance required to be provided by Contractor under Paragraph 6.03, Owner, at Owner's option, may purchase and maintain at Owner's expense Owner's own liability insurance as will protect Owner against claims which may arise from operations under the Contract Documents.

B. Owner's liability policies, if any, operate separately and independently from policies required to be provided by Contractor, and Contractor cannot rely upon Owner's liability policies for any of Contractor's obligations to the Owner, Engineer, or third parties.

6.05 *Property Insurance*

A. *Builder's Risk*: Unless otherwise provided in the Supplementary Conditions, Contractor shall purchase and maintain builder's risk insurance upon the Work on a completed value basis, in the amount of the full insurable replacement cost thereof (subject to such deductible amounts as may be provided in the Supplementary Conditions or required by Laws and Regulations). This insurance shall:

1. include the Owner and Contractor as named insureds, and all Subcontractors, and any individuals or entities required by the Supplementary Conditions to be insured under such builder's risk policy, as insureds or named insureds. For purposes of the remainder of this Paragraph 6.05, Paragraphs 6.06 and 6.07, and any corresponding Supplementary Conditions, the parties required to be insured shall collectively be referred to as "insureds."

Copyright © 2013 National Society of Professional Engineers, American Council of Engineering Companies, and American Society of Civil Engineers. All rights reserved.

2. be written on a builder's risk "all risk" policy form that shall at least include insurance for physical loss or damage to the Work, temporary buildings, falsework, and materials and equipment in transit, and shall insure against at least the following perils or causes of loss: fire; lightning; windstorm; riot; civil commotion; terrorism; vehicle impact; aircraft; smoke; theft; vandalism and malicious mischief; mechanical breakdown, boiler explosion, and artificially generated electric current; earthquake; volcanic activity, and other earth movement; flood; collapse; explosion; debris removal; demolition occasioned by enforcement of Laws and Regulations; water damage (other than that caused by flood); and such other perils or causes of loss as may be specifically required by the Supplementary Conditions. If insurance against mechanical breakdown, boiler explosion, and artificially generated electric current; earthquake; volcanic activity, and other earth movement; or flood, are not commercially available under builder's risk policies, by endorsement or otherwise, such insurance may be provided through other insurance policies acceptable to Owner and Contractor.

3. cover, as insured property, at least the following: (a) the Work and all materials, supplies, machinery, apparatus, equipment, fixtures, and other property of a similar nature that are to be incorporated into or used in the preparation, fabrication, construction, erection, or completion of the Work, including Owner-furnished or assigned property; (b) spare parts inventory required within the scope of the Contract; and (c) temporary works which are not intended to form part of the permanent constructed Work but which are intended to provide working access to the Site, or to the Work under construction, or which are intended to provide temporary support for the Work under construction, including scaffolding, form work, fences, shoring, falsework, and temporary structures.

4. cover expenses incurred in the repair or replacement of any insured property (including but not limited to fees and charges of engineers and architects).

5. extend to cover damage or loss to insured property while in temporary storage at the Site or in a storage location outside the Site (but not including property stored at the premises of a manufacturer or Supplier).

6. extend to cover damage or loss to insured property while in transit.

7. allow for partial occupation or use of the Work by Owner, such that those portions of the Work that are not yet occupied or used by Owner shall remain covered by the builder's risk insurance.

8. allow for the waiver of the insurer's subrogation rights, as set forth below.

9. provide primary coverage for all losses and damages caused by the perils or causes of loss covered.

10. not include a co-insurance clause.

11. include an exception for ensuing losses from physical damage or loss with respect to any defective workmanship, design, or materials exclusions.

12. include performance/hot testing and start-up.

13. be maintained in effect, subject to the provisions herein regarding Substantial Completion and partial occupancy or use of the Work by Owner, until the Work is complete.

B. *Notice of Cancellation or Change*: All the policies of insurance (and the certificates or other evidence thereof) required to be purchased and maintained in accordance with this

Copyright © 2013 National Society of Professional Engineers, American Council of Engineering Companies, and American Society of Civil Engineers. All rights reserved.

Paragraph 6.05 will contain a provision or endorsement that the coverage afforded will not be canceled or materially changed or renewal refused until at least 10 days prior written notice has been given to the purchasing policyholder. Within three days of receipt of any such written notice, the purchasing policyholder shall provide a copy of the notice to each other insured.

C. *Deductibles*: The purchaser of any required builder's risk or property insurance shall pay for costs not covered because of the application of a policy deductible.

D. *Partial Occupancy or Use by Owner*: If Owner will occupy or use a portion or portions of the Work prior to Substantial Completion of all the Work as provided in Paragraph 15.04, then Owner (directly, if it is the purchaser of the builder's risk policy, or through Contractor) will provide notice of such occupancy or use to the builder's risk insurer. The builder's risk insurance shall not be canceled or permitted to lapse on account of any such partial use or occupancy; rather, those portions of the Work that are occupied or used by Owner may come off the builder's risk policy, while those portions of the Work not yet occupied or used by Owner shall remain covered by the builder's risk insurance.

E. *Additional Insurance*: If Contractor elects to obtain other special insurance to be included in or supplement the builder's risk or property insurance policies provided under this Paragraph 6.05, it may do so at Contractor's expense.

F. *Insurance of Other Property*: If the express insurance provisions of the Contract do not require or address the insurance of a property item or interest, such as tools, construction equipment, or other personal property owned by Contractor, a Subcontractor, or an employee of Contractor or a Subcontractor, then the entity or individual owning such property item will be responsible for deciding whether to insure it, and if so in what amount.

6.06 *Waiver of Rights*

A. All policies purchased in accordance with Paragraph 6.05, expressly including the builder's risk policy, shall contain provisions to the effect that in the event of payment of any loss or damage the insurers will have no rights of recovery against any insureds thereunder, or against Engineer or its consultants, or their officers, directors, members, partners, employees, agents, consultants, or subcontractors. Owner and Contractor waive all rights against each other and the respective officers, directors, members, partners, employees, agents, consultants, and subcontractors of each and any of them, for all losses and damages caused by, arising out of, or resulting from any of the perils or causes of loss covered by such policies and any other property insurance applicable to the Work; and, in addition, waive all such rights against Engineer, its consultants, all Subcontractors, all individuals or entities identified in the Supplementary Conditions as insureds, and the officers, directors, members, partners, employees, agents, consultants, and subcontractors of each and any of them, under such policies for losses and damages so caused. None of the above waivers shall extend to the rights that any party making such waiver may have to the proceeds of insurance held by Owner or Contractor as trustee or fiduciary, or otherwise payable under any policy so issued.

B. Owner waives all rights against Contractor, Subcontractors, and Engineer, and the officers, directors, members, partners, employees, agents, consultants and subcontractors of each and any of them, for:

1. loss due to business interruption, loss of use, or other consequential loss extending beyond direct physical loss or damage to Owner's property or the Work caused by,

Copyright © 2013 National Society of Professional Engineers, American Council of Engineering Companies, and American Society of Civil Engineers. All rights reserved.

arising out of, or resulting from fire or other perils whether or not insured by Owner; and

2. loss or damage to the completed Project or part thereof caused by, arising out of, or resulting from fire or other insured peril or cause of loss covered by any property insurance maintained on the completed Project or part thereof by Owner during partial occupancy or use pursuant to Paragraph 15.04, after Substantial Completion pursuant to Paragraph 15.03, or after final payment pursuant to Paragraph 15.06.

C. Any insurance policy maintained by Owner covering any loss, damage or consequential loss referred to in Paragraph 6.06.B shall contain provisions to the effect that in the event of payment of any such loss, damage, or consequential loss, the insurers will have no rights of recovery against Contractor, Subcontractors, or Engineer, or the officers, directors, members, partners, employees, agents, consultants, or subcontractors of each and any of them.

D. Contractor shall be responsible for assuring that the agreement under which a Subcontractor performs a portion of the Work contains provisions whereby the Subcontractor waives all rights against Owner, Contractor, all individuals or entities identified in the Supplementary Conditions as insureds, the Engineer and its consultants, and the officers, directors, members, partners, employees, agents, consultants, and subcontractors of each and any of them, for all losses and damages caused by, arising out of, relating to, or resulting from any of the perils or causes of loss covered by builder's risk insurance and any other property insurance applicable to the Work.

6.07 *Receipt and Application of Property Insurance Proceeds*

A. Any insured loss under the builder's risk and other policies of insurance required by Paragraph 6.05 will be adjusted and settled with the named insured that purchased the policy. Such named insured shall act as fiduciary for the other insureds, and give notice to such other insureds that adjustment and settlement of a claim is in progress. Any other insured may state its position regarding a claim for insured loss in writing within 15 days after notice of such claim.

B. Proceeds for such insured losses may be made payable by the insurer either jointly to multiple insureds, or to the named insured that purchased the policy in its own right and as fiduciary for other insureds, subject to the requirements of any applicable mortgage clause. A named insured receiving insurance proceeds under the builder's risk and other policies of insurance required by Paragraph 6.05 shall distribute such proceeds in accordance with such agreement as the parties in interest may reach, or as otherwise required under the dispute resolution provisions of this Contract or applicable Laws and Regulations.

C. If no other special agreement is reached, the damaged Work shall be repaired or replaced, the money so received applied on account thereof, and the Work and the cost thereof covered by Change Order, if needed.

ARTICLE 7 – CONTRACTOR'S RESPONSIBILITIES

7.01 *Supervision and Superintendence*

A. Contractor shall supervise, inspect, and direct the Work competently and efficiently, devoting such attention thereto and applying such skills and expertise as may be necessary to perform the Work in accordance with the Contract Documents. Contractor shall be solely responsible for the means, methods, techniques, sequences, and procedures of construction.

Copyright © 2013 National Society of Professional Engineers, American Council of Engineering Companies, and American Society of Civil Engineers. All rights reserved.

B. At all times during the progress of the Work, Contractor shall assign a competent resident superintendent who shall not be replaced without written notice to Owner and Engineer except under extraordinary circumstances.

7.02 *Labor; Working Hours*

A. Contractor shall provide competent, suitably qualified personnel to survey and lay out the Work and perform construction as required by the Contract Documents. Contractor shall at all times maintain good discipline and order at the Site.

B. Except as otherwise required for the safety or protection of persons or the Work or property at the Site or adjacent thereto, and except as otherwise stated in the Contract Documents, all Work at the Site shall be performed during regular working hours, Monday through Friday. Contractor will not perform Work on a Saturday, Sunday, or any legal holiday. Contractor may perform Work outside regular working hours or on Saturdays, Sundays, or legal holidays only with Owner's written consent, which will not be unreasonably withheld.

7.03 *Services, Materials, and Equipment*

A. Unless otherwise specified in the Contract Documents, Contractor shall provide and assume full responsibility for all services, materials, equipment, labor, transportation, construction equipment and machinery, tools, appliances, fuel, power, light, heat, telephone, water, sanitary facilities, temporary facilities, and all other facilities and incidentals necessary for the performance, testing, start up, and completion of the Work, whether or not such items are specifically called for in the Contract Documents.

B. All materials and equipment incorporated into the Work shall be of good quality and new, except as otherwise provided in the Contract Documents. All special warranties and guarantees required by the Specifications shall expressly run to the benefit of Owner. If required by Engineer, Contractor shall furnish satisfactory evidence (including reports of required tests) as to the source, kind, and quality of materials and equipment.

C. All materials and equipment shall be stored, applied, installed, connected, erected, protected, used, cleaned, and conditioned in accordance with instructions of the applicable Supplier, except as otherwise may be provided in the Contract Documents.

7.04 *"Or Equals"*

A. Whenever an item of material or equipment is specified or described in the Contract Documents by using the name of a proprietary item or the name of a particular Supplier, the Contract Price has been based upon Contractor furnishing such item as specified. The specification or description of such an item is intended to establish the type, function, appearance, and quality required. Unless the specification or description contains or is followed by words reading that no like, equivalent, or "or equal" item is permitted, Contractor may request that Engineer authorize the use of other items of material or equipment, or items from other proposed suppliers under the circumstances described below.

1. If Engineer in its sole discretion determines that an item of material or equipment proposed by Contractor is functionally equal to that named and sufficiently similar so that no change in related Work will be required, Engineer shall deem it an "or equal" item. For the purposes of this paragraph, a proposed item of material or equipment will be considered functionally equal to an item so named if:

Copyright © 2013 National Society of Professional Engineers, American Council of Engineering Companies, and American Society of Civil Engineers. All rights reserved.

a. in the exercise of reasonable judgment Engineer determines that:

1) it is at least equal in materials of construction, quality, durability, appearance, strength, and design characteristics;

2) it will reliably perform at least equally well the function and achieve the results imposed by the design concept of the completed Project as a functioning whole;

3) it has a proven record of performance and availability of responsive service; and

4) it is not objectionable to Owner.

b. Contractor certifies that, if approved and incorporated into the Work:

1) there will be no increase in cost to the Owner or increase in Contract Times; and

2) it will conform substantially to the detailed requirements of the item named in the Contract Documents.

B. *Contractor's Expense*: Contractor shall provide all data in support of any proposed "or equal" item at Contractor's expense.

C. *Engineer's Evaluation and Determination*: Engineer will be allowed a reasonable time to evaluate each "or-equal" request. Engineer may require Contractor to furnish additional data about the proposed "or-equal" item. Engineer will be the sole judge of acceptability. No "or-equal" item will be ordered, furnished, installed, or utilized until Engineer's review is complete and Engineer determines that the proposed item is an "or-equal", which will be evidenced by an approved Shop Drawing or other written communication. Engineer will advise Contractor in writing of any negative determination.

D. *Effect of Engineer's Determination*: Neither approval nor denial of an "or-equal" request shall result in any change in Contract Price. The Engineer's denial of an "or-equal" request shall be final and binding, and may not be reversed through an appeal under any provision of the Contract Documents.

E. *Treatment as a Substitution Request*: If Engineer determines that an item of material or equipment proposed by Contractor does not qualify as an "or-equal" item, Contractor may request that Engineer considered the proposed item as a substitute pursuant to Paragraph 7.05.

7.05 *Substitutes*

A. Unless the specification or description of an item of material or equipment required to be furnished under the Contract Documents contains or is followed by words reading that no substitution is permitted, Contractor may request that Engineer authorize the use of other items of material or equipment under the circumstances described below. To the extent possible such requests shall be made before commencement of related construction at the Site.

1. Contractor shall submit sufficient information as provided below to allow Engineer to determine if the item of material or equipment proposed is functionally equivalent to that named and an acceptable substitute therefor. Engineer will not accept requests for review of proposed substitute items of material or equipment from anyone other than Contractor.

Copyright © 2013 National Society of Professional Engineers, American Council of Engineering Companies, and American Society of Civil Engineers. All rights reserved.

2. The requirements for review by Engineer will be as set forth in Paragraph 7.05.B, as supplemented by the Specifications, and as Engineer may decide is appropriate under the circumstances.

3. Contractor shall make written application to Engineer for review of a proposed substitute item of material or equipment that Contractor seeks to furnish or use. The application:

   a. shall certify that the proposed substitute item will:

      1) perform adequately the functions and achieve the results called for by the general design,

      2) be similar in substance to that specified, and

      3) be suited to the same use as that specified.

   b. will state:

      1) the extent, if any, to which the use of the proposed substitute item will necessitate a change in Contract Times,

      2) whether use of the proposed substitute item in the Work will require a change in any of the Contract Documents (or in the provisions of any other direct contract with Owner for other work on the Project) to adapt the design to the proposed substitute item, and

      3) whether incorporation or use of the proposed substitute item in connection with the Work is subject to payment of any license fee or royalty.

   c. will identify:

      1) all variations of the proposed substitute item from that specified, and

      2) available engineering, sales, maintenance, repair, and replacement services.

   d. shall contain an itemized estimate of all costs or credits that will result directly or indirectly from use of such substitute item, including but not limited to changes in Contract Price, shared savings, costs of redesign, and claims of other contractors affected by any resulting change.

B. *Engineer's Evaluation and Determination*: Engineer will be allowed a reasonable time to evaluate each substitute request, and to obtain comments and direction from Owner. Engineer may require Contractor to furnish additional data about the proposed substitute item. Engineer will be the sole judge of acceptability. No substitute will be ordered, furnished, installed, or utilized until Engineer's review is complete and Engineer determines that the proposed item is an acceptable substitute. Engineer's determination will be evidenced by a Field Order or a proposed Change Order accounting for the substitution itself and all related impacts, including changes in Contract Price or Contract Times. Engineer will advise Contractor in writing of any negative determination.

C. *Special Guarantee*: Owner may require Contractor to furnish at Contractor's expense a special performance guarantee or other surety with respect to any substitute.

D. *Reimbursement of Engineer's Cost*: Engineer will record Engineer's costs in evaluating a substitute proposed or submitted by Contractor. Whether or not Engineer approves a substitute so proposed or submitted by Contractor, Contractor shall reimburse Owner for the reasonable charges of Engineer for evaluating each such proposed substitute. Contractor shall also reimburse Owner for the reasonable charges of Engineer for making changes in the

Copyright © 2013 National Society of Professional Engineers, American Council of Engineering Companies, and American Society of Civil Engineers. All rights reserved.

Contract Documents (or in the provisions of any other direct contract with Owner) resulting from the acceptance of each proposed substitute.

E. *Contractor's Expense*: Contractor shall provide all data in support of any proposed substitute at Contractor's expense.

F. *Effect of Engineer's Determination*: If Engineer approves the substitution request, Contractor shall execute the proposed Change Order and proceed with the substitution. The Engineer's denial of a substitution request shall be final and binding, and may not be reversed through an appeal under any provision of the Contract Documents. Contractor may challenge the scope of reimbursement costs imposed under Paragraph 7.05.D, by timely submittal of a Change Proposal.

7.06 *Concerning Subcontractors, Suppliers, and Others*

A. Contractor may retain Subcontractors and Suppliers for the performance of parts of the Work. Such Subcontractors and Suppliers must be acceptable to Owner.

B. Contractor shall retain specific Subcontractors, Suppliers, or other individuals or entities for the performance of designated parts of the Work if required by the Contract to do so.

C. Subsequent to the submittal of Contractor's Bid or final negotiation of the terms of the Contract, Owner may not require Contractor to retain any Subcontractor, Supplier, or other individual or entity to furnish or perform any of the Work against which Contractor has reasonable objection.

D. Prior to entry into any binding subcontract or purchase order, Contractor shall submit to Owner the identity of the proposed Subcontractor or Supplier (unless Owner has already deemed such proposed Subcontractor or Supplier acceptable, during the bidding process or otherwise). Such proposed Subcontractor or Supplier shall be deemed acceptable to Owner unless Owner raises a substantive, reasonable objection within five days.

E. Owner may require the replacement of any Subcontractor, Supplier, or other individual or entity retained by Contractor to perform any part of the Work. Owner also may require Contractor to retain specific replacements; provided, however, that Owner may not require a replacement to which Contractor has a reasonable objection. If Contractor has submitted the identity of certain Subcontractors, Suppliers, or other individuals or entities for acceptance by Owner, and Owner has accepted it (either in writing or by failing to make written objection thereto), then Owner may subsequently revoke the acceptance of any such Subcontractor, Supplier, or other individual or entity so identified solely on the basis of substantive, reasonable objection after due investigation. Contractor shall submit an acceptable replacement for the rejected Subcontractor, Supplier, or other individual or entity.

F. If Owner requires the replacement of any Subcontractor, Supplier, or other individual or entity retained by Contractor to perform any part of the Work, then Contractor shall be entitled to an adjustment in Contract Price or Contract Times, or both, with respect to the replacement; and Contractor shall initiate a Change Proposal for such adjustment within 30 days of Owner's requirement of replacement.

G. No acceptance by Owner of any such Subcontractor, Supplier, or other individual or entity, whether initially or as a replacement, shall constitute a waiver of the right of Owner to the completion of the Work in accordance with the Contract Documents.

Copyright © 2013 National Society of Professional Engineers, American Council of Engineering Companies, and American Society of Civil Engineers. All rights reserved.

H. On a monthly basis Contractor shall submit to Engineer a complete list of all Subcontractors and Suppliers having a direct contract with Contractor, and of all other Subcontractors and Suppliers known to Contractor at the time of submittal.

I. Contractor shall be fully responsible to Owner and Engineer for all acts and omissions of the Subcontractors, Suppliers, and other individuals or entities performing or furnishing any of the Work just as Contractor is responsible for Contractor's own acts and omissions.

J. Contractor shall be solely responsible for scheduling and coordinating the work of Subcontractors, Suppliers, and all other individuals or entities performing or furnishing any of the Work.

K. Contractor shall restrict all Subcontractors, Suppliers, and such other individuals or entities performing or furnishing any of the Work from communicating with Engineer or Owner, except through Contractor or in case of an emergency, or as otherwise expressly allowed herein.

L. The divisions and sections of the Specifications and the identifications of any Drawings shall not control Contractor in dividing the Work among Subcontractors or Suppliers or delineating the Work to be performed by any specific trade.

M. All Work performed for Contractor by a Subcontractor or Supplier shall be pursuant to an appropriate contractual agreement that specifically binds the Subcontractor or Supplier to the applicable terms and conditions of the Contract Documents for the benefit of Owner and Engineer.

N. Owner may furnish to any Subcontractor or Supplier, to the extent practicable, information about amounts paid to Contractor on account of Work performed for Contractor by the particular Subcontractor or Supplier.

O. Nothing in the Contract Documents:

1. shall create for the benefit of any such Subcontractor, Supplier, or other individual or entity any contractual relationship between Owner or Engineer and any such Subcontractor, Supplier, or other individual or entity; nor

2. shall create any obligation on the part of Owner or Engineer to pay or to see to the payment of any money due any such Subcontractor, Supplier, or other individual or entity except as may otherwise be required by Laws and Regulations.

7.07 *Patent Fees and Royalties*

A. Contractor shall pay all license fees and royalties and assume all costs incident to the use in the performance of the Work or the incorporation in the Work of any invention, design, process, product, or device which is the subject of patent rights or copyrights held by others. If a particular invention, design, process, product, or device is specified in the Contract Documents for use in the performance of the Work and if, to the actual knowledge of Owner or Engineer, its use is subject to patent rights or copyrights calling for the payment of any license fee or royalty to others, the existence of such rights shall be disclosed by Owner in the Contract Documents.

B. To the fullest extent permitted by Laws and Regulations, Owner shall indemnify and hold harmless Contractor, and its officers, directors, members, partners, employees, agents, consultants, and subcontractors from and against all claims, costs, losses, and damages (including but not limited to all fees and charges of engineers, architects, attorneys, and other professionals, and all court or arbitration or other dispute resolution costs) arising out of or relating to any infringement of patent rights or copyrights incident to the use in the

Copyright © 2013 National Society of Professional Engineers, American Council of Engineering Companies, and American Society of Civil Engineers. All rights reserved.

performance of the Work or resulting from the incorporation in the Work of any invention, design, process, product, or device specified in the Contract Documents, but not identified as being subject to payment of any license fee or royalty to others required by patent rights or copyrights.

C. To the fullest extent permitted by Laws and Regulations, Contractor shall indemnify and hold harmless Owner and Engineer, and the officers, directors, members, partners, employees, agents, consultants and subcontractors of each and any of them from and against all claims, costs, losses, and damages (including but not limited to all fees and charges of engineers, architects, attorneys, and other professionals and all court or arbitration or other dispute resolution costs) arising out of or relating to any infringement of patent rights or copyrights incident to the use in the performance of the Work or resulting from the incorporation in the Work of any invention, design, process, product, or device not specified in the Contract Documents.

7.08 *Permits*

A. Unless otherwise provided in the Contract Documents, Contractor shall obtain and pay for all construction permits and licenses. Owner shall assist Contractor, when necessary, in obtaining such permits and licenses. Contractor shall pay all governmental charges and inspection fees necessary for the prosecution of the Work which are applicable at the time of the submission of Contractor's Bid (or when Contractor became bound under a negotiated contract). Owner shall pay all charges of utility owners for connections for providing permanent service to the Work

7.09 *Taxes*

A. Contractor shall pay all sales, consumer, use, and other similar taxes required to be paid by Contractor in accordance with the Laws and Regulations of the place of the Project which are applicable during the performance of the Work.

7.10 *Laws and Regulations*

A. Contractor shall give all notices required by and shall comply with all Laws and Regulations applicable to the performance of the Work. Except where otherwise expressly required by applicable Laws and Regulations, neither Owner nor Engineer shall be responsible for monitoring Contractor's compliance with any Laws or Regulations.

B. If Contractor performs any Work or takes any other action knowing or having reason to know that it is contrary to Laws or Regulations, Contractor shall bear all resulting costs and losses, and shall indemnify and hold harmless Owner and Engineer, and the officers, directors, members, partners, employees, agents, consultants, and subcontractors of each and any of them from and against all claims, costs, losses, and damages (including but not limited to all fees and charges of engineers, architects, attorneys, and other professionals and all court or arbitration or other dispute resolution costs) arising out of or relating to such Work or other action. It shall not be Contractor's responsibility to make certain that the Work described in the Contract Documents is in accordance with Laws and Regulations, but this shall not relieve Contractor of Contractor's obligations under Paragraph 3.03.

C. Owner or Contractor may give notice to the other party of any changes after the submission of Contractor's Bid (or after the date when Contractor became bound under a negotiated contract) in Laws or Regulations having an effect on the cost or time of performance of the Work, including but not limited to changes in Laws or Regulations having an effect on procuring permits and on sales, use, value-added, consumption, and other similar taxes. If Owner and Contractor are unable to agree on entitlement to or on the amount or extent, if

Copyright © 2013 National Society of Professional Engineers, American Council of Engineering Companies, and American Society of Civil Engineers. All rights reserved.

any, of any adjustment in Contract Price or Contract Times resulting from such changes, then within 30 days of such notice Contractor may submit a Change Proposal, or Owner may initiate a Claim.

7.11 *Record Documents*

A. Contractor shall maintain in a safe place at the Site one printed record copy of all Drawings, Specifications, Addenda, Change Orders, Work Change Directives, Field Orders, written interpretations and clarifications, and approved Shop Drawings. Contractor shall keep such record documents in good order and annotate them to show changes made during construction. These record documents, together with all approved Samples, will be available to Engineer for reference. Upon completion of the Work, Contractor shall deliver these record documents to Engineer.

7.12 *Safety and Protection*

A. Contractor shall be solely responsible for initiating, maintaining, and supervising all safety precautions and programs in connection with the Work. Such responsibility does not relieve Subcontractors of their responsibility for the safety of persons or property in the performance of their work, nor for compliance with applicable safety Laws and Regulations. Contractor shall take all necessary precautions for the safety of, and shall provide the necessary protection to prevent damage, injury, or loss to:

1. all persons on the Site or who may be affected by the Work;
2. all the Work and materials and equipment to be incorporated therein, whether in storage on or off the Site; and
3. other property at the Site or adjacent thereto, including trees, shrubs, lawns, walks, pavements, roadways, structures, other work in progress, utilities, and Underground Facilities not designated for removal, relocation, or replacement in the course of construction.

B. Contractor shall comply with all applicable Laws and Regulations relating to the safety of persons or property, or to the protection of persons or property from damage, injury, or loss; and shall erect and maintain all necessary safeguards for such safety and protection. Contractor shall notify Owner; the owners of adjacent property, Underground Facilities, and other utilities; and other contractors and utility owners performing work at or adjacent to the Site, when prosecution of the Work may affect them, and shall cooperate with them in the protection, removal, relocation, and replacement of their property or work in progress.

C. Contractor shall comply with the applicable requirements of Owner's safety programs, if any. The Supplementary Conditions identify any Owner's safety programs that are applicable to the Work.

D. Contractor shall inform Owner and Engineer of the specific requirements of Contractor's safety program with which Owner's and Engineer's employees and representatives must comply while at the Site.

E. All damage, injury, or loss to any property referred to in Paragraph 7.12.A.2 or 7.12.A.3 caused, directly or indirectly, in whole or in part, by Contractor, any Subcontractor, Supplier, or any other individual or entity directly or indirectly employed by any of them to perform any of the Work, or anyone for whose acts any of them may be liable, shall be remedied by Contractor at its expense (except damage or loss attributable to the fault of Drawings or Specifications or to the acts or omissions of Owner or Engineer or anyone employed by any of them, or anyone for whose acts any of them may be liable, and not attributable, directly

Copyright © 2013 National Society of Professional Engineers, American Council of Engineering Companies, and American Society of Civil Engineers. All rights reserved.

or indirectly, in whole or in part, to the fault or negligence of Contractor or any Subcontractor, Supplier, or other individual or entity directly or indirectly employed by any of them).

F. Contractor's duties and responsibilities for safety and protection shall continue until such time as all the Work is completed and Engineer has issued a notice to Owner and Contractor in accordance with Paragraph 15.06.B that the Work is acceptable (except as otherwise expressly provided in connection with Substantial Completion).

G. Contractor's duties and responsibilities for safety and protection shall resume whenever Contractor or any Subcontractor or Supplier returns to the Site to fulfill warranty or correction obligations, or to conduct other tasks arising from the Contract Documents.

7.13 *Safety Representative*

A. Contractor shall designate a qualified and experienced safety representative at the Site whose duties and responsibilities shall be the prevention of accidents and the maintaining and supervising of safety precautions and programs.

7.14 *Hazard Communication Programs*

A. Contractor shall be responsible for coordinating any exchange of material safety data sheets or other hazard communication information required to be made available to or exchanged between or among employers at the Site in accordance with Laws or Regulations.

7.15 *Emergencies*

A. In emergencies affecting the safety or protection of persons or the Work or property at the Site or adjacent thereto, Contractor is obligated to act to prevent threatened damage, injury, or loss. Contractor shall give Engineer prompt written notice if Contractor believes that any significant changes in the Work or variations from the Contract Documents have been caused thereby or are required as a result thereof. If Engineer determines that a change in the Contract Documents is required because of the action taken by Contractor in response to such an emergency, a Work Change Directive or Change Order will be issued.

7.16 *Shop Drawings, Samples, and Other Submittals*

A. *Shop Drawing and Sample Submittal Requirements*:

1. Before submitting a Shop Drawing or Sample, Contractor shall have:

a. reviewed and coordinated the Shop Drawing or Sample with other Shop Drawings and Samples and with the requirements of the Work and the Contract Documents;

b. determined and verified all field measurements, quantities, dimensions, specified performance and design criteria, installation requirements, materials, catalog numbers, and similar information with respect thereto;

c. determined and verified the suitability of all materials and equipment offered with respect to the indicated application, fabrication, shipping, handling, storage, assembly, and installation pertaining to the performance of the Work; and

d. determined and verified all information relative to Contractor's responsibilities for means, methods, techniques, sequences, and procedures of construction, and safety precautions and programs incident thereto.

2. Each submittal shall bear a stamp or specific written certification that Contractor has satisfied Contractor's obligations under the Contract Documents with respect to Contractor's review of that submittal, and that Contractor approves the submittal.

Copyright © 2013 National Society of Professional Engineers, American Council of Engineering Companies, and American Society of Civil Engineers. All rights reserved.

3. With each submittal, Contractor shall give Engineer specific written notice of any variations that the Shop Drawing or Sample may have from the requirements of the Contract Documents. This notice shall be set forth in a written communication separate from the Shop Drawings or Sample submittal; and, in addition, in the case of Shop Drawings by a specific notation made on each Shop Drawing submitted to Engineer for review and approval of each such variation.

B. *Submittal Procedures for Shop Drawings and Samples*: Contractor shall submit Shop Drawings and Samples to Engineer for review and approval in accordance with the accepted Schedule of Submittals. Each submittal will be identified as Engineer may require.

1. *Shop Drawings*:

a. Contractor shall submit the number of copies required in the Specifications.

b. Data shown on the Shop Drawings will be complete with respect to quantities, dimensions, specified performance and design criteria, materials, and similar data to show Engineer the services, materials, and equipment Contractor proposes to provide and to enable Engineer to review the information for the limited purposes required by Paragraph 7.16.D.

2. *Samples*:

a. Contractor shall submit the number of Samples required in the Specifications.

b. Contractor shall clearly identify each Sample as to material, Supplier, pertinent data such as catalog numbers, the use for which intended and other data as Engineer may require to enable Engineer to review the submittal for the limited purposes required by Paragraph 7.16.D.

3. Where a Shop Drawing or Sample is required by the Contract Documents or the Schedule of Submittals, any related Work performed prior to Engineer's review and approval of the pertinent submittal will be at the sole expense and responsibility of Contractor.

C. *Other Submittals*: Contractor shall submit other submittals to Engineer in accordance with the accepted Schedule of Submittals, and pursuant to the applicable terms of the Specifications.

D. *Engineer's Review*:

1. Engineer will provide timely review of Shop Drawings and Samples in accordance with the Schedule of Submittals acceptable to Engineer. Engineer's review and approval will be only to determine if the items covered by the submittals will, after installation or incorporation in the Work, conform to the information given in the Contract Documents and be compatible with the design concept of the completed Project as a functioning whole as indicated by the Contract Documents.

2. Engineer's review and approval will not extend to means, methods, techniques, sequences, or procedures of construction or to safety precautions or programs incident thereto.

3. Engineer's review and approval of a separate item as such will not indicate approval of the assembly in which the item functions.

4. Engineer's review and approval of a Shop Drawing or Sample shall not relieve Contractor from responsibility for any variation from the requirements of the Contract Documents unless Contractor has complied with the requirements of Paragraph 7.16.A.3 and

Copyright © 2013 National Society of Professional Engineers, American Council of Engineering Companies, and American Society of Civil Engineers. All rights reserved.

Engineer has given written approval of each such variation by specific written notation thereof incorporated in or accompanying the Shop Drawing or Sample. Engineer will document any such approved variation from the requirements of the Contract Documents in a Field Order.

5. Engineer's review and approval of a Shop Drawing or Sample shall not relieve Contractor from responsibility for complying with the requirements of Paragraph 7.16.A and B.

6. Engineer's review and approval of a Shop Drawing or Sample, or of a variation from the requirements of the Contract Documents, shall not, under any circumstances, change the Contract Times or Contract Price, unless such changes are included in a Change Order.

7. Neither Engineer's receipt, review, acceptance or approval of a Shop Drawing, Sample, or other submittal shall result in such item becoming a Contract Document.

8. Contractor shall perform the Work in compliance with the requirements and commitments set forth in approved Shop Drawings and Samples, subject to the provisions of Paragraph 7.16.D.4.

E. *Resubmittal Procedures*:

1. Contractor shall make corrections required by Engineer and shall return the required number of corrected copies of Shop Drawings and submit, as required, new Samples for review and approval. Contractor shall direct specific attention in writing to revisions other than the corrections called for by Engineer on previous submittals.

2. Contractor shall furnish required submittals with sufficient information and accuracy to obtain required approval of an item with no more than three submittals. Engineer will record Engineer's time for reviewing a fourth or subsequent submittal of a Shop Drawings, sample, or other item requiring approval, and Contractor shall be responsible for Engineer's charges to Owner for such time. Owner may impose a set-off against payments due to Contractor to secure reimbursement for such charges.

3. If Contractor requests a change of a previously approved submittal item, Contractor shall be responsible for Engineer's charges to Owner for its review time, and Owner may impose a set-off against payments due to Contractor to secure reimbursement for such charges, unless the need for such change is beyond the control of Contractor.

7.17 *Contractor's General Warranty and Guarantee*

A. Contractor warrants and guarantees to Owner that all Work will be in accordance with the Contract Documents and will not be defective. Engineer and its officers, directors, members, partners, employees, agents, consultants, and subcontractors shall be entitled to rely on Contractor's warranty and guarantee.

B. Contractor's warranty and guarantee hereunder excludes defects or damage caused by:

1. abuse, modification, or improper maintenance or operation by persons other than Contractor, Subcontractors, Suppliers, or any other individual or entity for whom Contractor is responsible; or

2. normal wear and tear under normal usage.

C. Contractor's obligation to perform and complete the Work in accordance with the Contract Documents shall be absolute. None of the following will constitute an acceptance of Work that is not in accordance with the Contract Documents or a release of Contractor's obligation to perform the Work in accordance with the Contract Documents:

Copyright © 2013 National Society of Professional Engineers, American Council of Engineering Companies, and American Society of Civil Engineers. All rights reserved.

1. observations by Engineer;
2. recommendation by Engineer or payment by Owner of any progress or final payment;
3. the issuance of a certificate of Substantial Completion by Engineer or any payment related thereto by Owner;
4. use or occupancy of the Work or any part thereof by Owner;
5. any review and approval of a Shop Drawing or Sample submittal;
6. the issuance of a notice of acceptability by Engineer;
7. any inspection, test, or approval by others; or
8. any correction of defective Work by Owner.

D. If the Contract requires the Contractor to accept the assignment of a contract entered into by Owner, then the specific warranties, guarantees, and correction obligations contained in the assigned contract shall govern with respect to Contractor's performance obligations to Owner for the Work described in the assigned contract.

7.18 *Indemnification*

A. To the fullest extent permitted by Laws and Regulations, and in addition to any other obligations of Contractor under the Contract or otherwise, Contractor shall indemnify and hold harmless Owner and Engineer, and the officers, directors, members, partners, employees, agents, consultants and subcontractors of each and any of them from and against all claims, costs, losses, and damages (including but not limited to all fees and charges of engineers, architects, attorneys, and other professionals and all court or arbitration or other dispute resolution costs) arising out of or relating to the performance of the Work, provided that any such claim, cost, loss, or damage is attributable to bodily injury, sickness, disease, or death, or to injury to or destruction of tangible property (other than the Work itself), including the loss of use resulting therefrom but only to the extent caused by any negligent act or omission of Contractor, any Subcontractor, any Supplier, or any individual or entity directly or indirectly employed by any of them to perform any of the Work or anyone for whose acts any of them may be liable.

B. In any and all claims against Owner or Engineer or any of their officers, directors, members, partners, employees, agents, consultants, or subcontractors by any employee (or the survivor or personal representative of such employee) of Contractor, any Subcontractor, any Supplier, or any individual or entity directly or indirectly employed by any of them to perform any of the Work, or anyone for whose acts any of them may be liable, the indemnification obligation under Paragraph 7.18.A shall not be limited in any way by any limitation on the amount or type of damages, compensation, or benefits payable by or for Contractor or any such Subcontractor, Supplier, or other individual or entity under workers' compensation acts, disability benefit acts, or other employee benefit acts.

C. The indemnification obligations of Contractor under Paragraph 7.18.A shall not extend to the liability of Engineer and Engineer's officers, directors, members, partners, employees, agents, consultants and subcontractors arising out of:

1. the preparation or approval of, or the failure to prepare or approve maps, Drawings, opinions, reports, surveys, Change Orders, designs, or Specifications; or
2. giving directions or instructions, or failing to give them, if that is the primary cause of the injury or damage.

Copyright © 2013 National Society of Professional Engineers, American Council of Engineering Companies, and American Society of Civil Engineers. All rights reserved.

7.19 *Delegation of Professional Design Services*

A. Contractor will not be required to provide professional design services unless such services are specifically required by the Contract Documents for a portion of the Work or unless such services are required to carry out Contractor's responsibilities for construction means, methods, techniques, sequences and procedures. Contractor shall not be required to provide professional services in violation of applicable Laws and Regulations.

B. If professional design services or certifications by a design professional related to systems, materials, or equipment are specifically required of Contractor by the Contract Documents, Owner and Engineer will specify all performance and design criteria that such services must satisfy. Contractor shall cause such services or certifications to be provided by a properly licensed professional, whose signature and seal shall appear on all drawings, calculations, specifications, certifications, and other submittals prepared by such professional. Shop Drawings and other submittals related to the Work designed or certified by such professional, if prepared by others, shall bear such professional's written approval when submitted to Engineer.

C. Owner and Engineer shall be entitled to rely upon the adequacy, accuracy, and completeness of the services, certifications, or approvals performed by such design professionals, provided Owner and Engineer have specified to Contractor all performance and design criteria that such services must satisfy.

D. Pursuant to this paragraph, Engineer's review and approval of design calculations and design drawings will be only for the limited purpose of checking for conformance with performance and design criteria given and the design concept expressed in the Contract Documents. Engineer's review and approval of Shop Drawings and other submittals (except design calculations and design drawings) will be only for the purpose stated in Paragraph 7.16.D.1.

E. Contractor shall not be responsible for the adequacy of the performance or design criteria specified by Owner or Engineer.

ARTICLE 8 – OTHER WORK AT THE SITE

8.01 *Other Work*

A. In addition to and apart from the Work under the Contract Documents, the Owner may perform other work at or adjacent to the Site. Such other work may be performed by Owner's employees, or through contracts between the Owner and third parties. Owner may also arrange to have third-party utility owners perform work on their utilities and facilities at or adjacent to the Site.

B. If Owner performs other work at or adjacent to the Site with Owner's employees, or through contracts for such other work, then Owner shall give Contractor written notice thereof prior to starting any such other work. If Owner has advance information regarding the start of any utility work at or adjacent to the Site, Owner shall provide such information to Contractor.

C. Contractor shall afford each other contractor that performs such other work, each utility owner performing other work, and Owner, if Owner is performing other work with Owner's employees, proper and safe access to the Site, and provide a reasonable opportunity for the introduction and storage of materials and equipment and the execution of such other work. Contractor shall do all cutting, fitting, and patching of the Work that may be required to properly connect or otherwise make its several parts come together and properly integrate with such other work. Contractor shall not endanger any work of others by cutting, excavating, or otherwise altering such work; provided, however, that Contractor may cut or

Copyright © 2013 National Society of Professional Engineers, American Council of Engineering Companies, and American Society of Civil Engineers. All rights reserved.

alter others' work with the written consent of Engineer and the others whose work will be affected.

D. If the proper execution or results of any part of Contractor's Work depends upon work performed by others under this Article 8, Contractor shall inspect such other work and promptly report to Engineer in writing any delays, defects, or deficiencies in such other work that render it unavailable or unsuitable for the proper execution and results of Contractor's Work. Contractor's failure to so report will constitute an acceptance of such other work as fit and proper for integration with Contractor's Work except for latent defects and deficiencies in such other work.

8.02 *Coordination*

A. If Owner intends to contract with others for the performance of other work at or adjacent to the Site, to perform other work at or adjacent to the Site with Owner's employees, or to arrange to have utility owners perform work at or adjacent to the Site, the following will be set forth in the Supplementary Conditions or provided to Contractor prior to the start of any such other work:

1. the identity of the individual or entity that will have authority and responsibility for coordination of the activities among the various contractors;
2. an itemization of the specific matters to be covered by such authority and responsibility; and
3. the extent of such authority and responsibilities.

B. Unless otherwise provided in the Supplementary Conditions, Owner shall have sole authority and responsibility for such coordination.

8.03 *Legal Relationships*

A. If, in the course of performing other work at or adjacent to the Site for Owner, the Owner's employees, any other contractor working for Owner, or any utility owner causes damage to the Work or to the property of Contractor or its Subcontractors, or delays, disrupts, interferes with, or increases the scope or cost of the performance of the Work, through actions or inaction, then Contractor shall be entitled to an equitable adjustment in the Contract Price or the Contract Times, or both. Contractor must submit any Change Proposal seeking an equitable adjustment in the Contract Price or the Contract Times under this paragraph within 30 days of the damaging, delaying, disrupting, or interfering event. The entitlement to, and extent of, any such equitable adjustment shall take into account information (if any) regarding such other work that was provided to Contractor in the Contract Documents prior to the submittal of the Bid or the final negotiation of the terms of the Contract. When applicable, any such equitable adjustment in Contract Price shall be conditioned on Contractor assigning to Owner all Contractor's rights against such other contractor or utility owner with respect to the damage, delay, disruption, or interference that is the subject of the adjustment. Contractor's entitlement to an adjustment of the Contract Times is conditioned on such adjustment being essential to Contractor's ability to complete the Work within the Contract Times.

B. Contractor shall take reasonable and customary measures to avoid damaging, delaying, disrupting, or interfering with the work of Owner, any other contractor, or any utility owner performing other work at or adjacent to the Site. If Contractor fails to take such measures and as a result damages, delays, disrupts, or interferes with the work of any such other contractor or utility owner, then Owner may impose a set-off against payments due to Contractor, and assign to such other contractor or utility owner the Owner's contractual

Copyright © 2013 National Society of Professional Engineers, American Council of Engineering Companies, and American Society of Civil Engineers. All rights reserved.

rights against Contractor with respect to the breach of the obligations set forth in this paragraph.

C. When Owner is performing other work at or adjacent to the Site with Owner's employees, Contractor shall be liable to Owner for damage to such other work, and for the reasonable direct delay, disruption, and interference costs incurred by Owner as a result of Contractor's failure to take reasonable and customary measures with respect to Owner's other work. In response to such damage, delay, disruption, or interference, Owner may impose a set-off against payments due to Contractor.

D. If Contractor damages, delays, disrupts, or interferes with the work of any other contractor, or any utility owner performing other work at or adjacent to the Site, through Contractor's failure to take reasonable and customary measures to avoid such impacts, or if any claim arising out of Contractor's actions, inactions, or negligence in performance of the Work at or adjacent to the Site is made by any such other contractor or utility owner against Contractor, Owner, or Engineer, then Contractor shall (1) promptly attempt to settle the claim as to all parties through negotiations with such other contractor or utility owner, or otherwise resolve the claim by arbitration or other dispute resolution proceeding or at law, and (2) indemnify and hold harmless Owner and Engineer, and the officers, directors, members, partners, employees, agents, consultants and subcontractors of each and any of them from and against any such claims, and against all costs, losses, and damages (including but not limited to all fees and charges of engineers, architects, attorneys, and other professionals and all court or arbitration or other dispute resolution costs) arising out of or relating to such damage, delay, disruption, or interference.

ARTICLE 9 – OWNER'S RESPONSIBILITIES

9.01 *Communications to Contractor*

A. Except as otherwise provided in these General Conditions, Owner shall issue all communications to Contractor through Engineer.

9.02 *Replacement of Engineer*

A. Owner may at its discretion appoint an engineer to replace Engineer, provided Contractor makes no reasonable objection to the replacement engineer. The replacement engineer's status under the Contract Documents shall be that of the former Engineer.

9.03 *Furnish Data*

A. Owner shall promptly furnish the data required of Owner under the Contract Documents.

9.04 *Pay When Due*

A. Owner shall make payments to Contractor when they are due as provided in the Agreement.

9.05 *Lands and Easements; Reports, Tests, and Drawings*

A. Owner's duties with respect to providing lands and easements are set forth in Paragraph 5.01.

B. Owner's duties with respect to providing engineering surveys to establish reference points are set forth in Paragraph 4.03.

C. Article 5 refers to Owner's identifying and making available to Contractor copies of reports of explorations and tests of conditions at the Site, and drawings of physical conditions relating to existing surface or subsurface structures at the Site.

Copyright © 2013 National Society of Professional Engineers, American Council of Engineering Companies, and American Society of Civil Engineers. All rights reserved.

9.06 *Insurance*

A. Owner's responsibilities, if any, with respect to purchasing and maintaining liability and property insurance are set forth in Article 6.

9.07 *Change Orders*

A. Owner's responsibilities with respect to Change Orders are set forth in Article 11.

9.08 *Inspections, Tests, and Approvals*

A. Owner's responsibility with respect to certain inspections, tests, and approvals is set forth in Paragraph 14.02.B.

9.09 *Limitations on Owner's Responsibilities*

A. The Owner shall not supervise, direct, or have control or authority over, nor be responsible for, Contractor's means, methods, techniques, sequences, or procedures of construction, or the safety precautions and programs incident thereto, or for any failure of Contractor to comply with Laws and Regulations applicable to the performance of the Work. Owner will not be responsible for Contractor's failure to perform the Work in accordance with the Contract Documents.

9.10 *Undisclosed Hazardous Environmental Condition*

A. Owner's responsibility in respect to an undisclosed Hazardous Environmental Condition is set forth in Paragraph 5.06.

9.11 *Evidence of Financial Arrangements*

A. Upon request of Contractor, Owner shall furnish Contractor reasonable evidence that financial arrangements have been made to satisfy Owner's obligations under the Contract Documents (including obligations under proposed changes in the Work).

9.12 *Safety Programs*

A. While at the Site, Owner's employees and representatives shall comply with the specific applicable requirements of Contractor's safety programs of which Owner has been informed.

B. Owner shall furnish copies of any applicable Owner safety programs to Contractor.

ARTICLE 10 – ENGINEER'S STATUS DURING CONSTRUCTION

10.01 *Owner's Representative*

A. Engineer will be Owner's representative during the construction period. The duties and responsibilities and the limitations of authority of Engineer as Owner's representative during construction are set forth in the Contract.

10.02 *Visits to Site*

A. Engineer will make visits to the Site at intervals appropriate to the various stages of construction as Engineer deems necessary in order to observe as an experienced and qualified design professional the progress that has been made and the quality of the various aspects of Contractor's executed Work. Based on information obtained during such visits and observations, Engineer, for the benefit of Owner, will determine, in general, if the Work is proceeding in accordance with the Contract Documents. Engineer will not be required to make exhaustive or continuous inspections on the Site to check the quality or quantity of the Work. Engineer's efforts will be directed toward providing for Owner a greater degree of confidence that the completed Work will conform generally to the Contract Documents. On

Copyright © 2013 National Society of Professional Engineers, American Council of Engineering Companies, and American Society of Civil Engineers. All rights reserved.

the basis of such visits and observations, Engineer will keep Owner informed of the progress of the Work and will endeavor to guard Owner against defective Work.

B. Engineer's visits and observations are subject to all the limitations on Engineer's authority and responsibility set forth in Paragraph 10.08. Particularly, but without limitation, during or as a result of Engineer's visits or observations of Contractor's Work, Engineer will not supervise, direct, control, or have authority over or be responsible for Contractor's means, methods, techniques, sequences, or procedures of construction, or the safety precautions and programs incident thereto, or for any failure of Contractor to comply with Laws and Regulations applicable to the performance of the Work.

10.03 *Project Representative*

A. If Owner and Engineer have agreed that Engineer will furnish a Resident Project Representative to represent Engineer at the Site and assist Engineer in observing the progress and quality of the Work, then the authority and responsibilities of any such Resident Project Representative will be as provided in the Supplementary Conditions, and limitations on the responsibilities thereof will be as provided in Paragraph 10.08. If Owner designates another representative or agent to represent Owner at the Site who is not Engineer's consultant, agent, or employee, the responsibilities and authority and limitations thereon of such other individual or entity will be as provided in the Supplementary Conditions.

10.04 *Rejecting Defective Work*

A. Engineer has the authority to reject Work in accordance with Article 14.

10.05 *Shop Drawings, Change Orders and Payments*

A. Engineer's authority, and limitations thereof, as to Shop Drawings and Samples, are set forth in Paragraph 7.16.

B. Engineer's authority, and limitations thereof, as to design calculations and design drawings submitted in response to a delegation of professional design services, if any, are set forth in Paragraph 7.19.

C. Engineer's authority as to Change Orders is set forth in Article 11.

D. Engineer's authority as to Applications for Payment is set forth in Article 15.

10.06 *Determinations for Unit Price Work*

A. Engineer will determine the actual quantities and classifications of Unit Price Work performed by Contractor as set forth in Paragraph 13.03.

10.07 *Decisions on Requirements of Contract Documents and Acceptability of Work*

A. Engineer will render decisions regarding the requirements of the Contract Documents, and judge the acceptability of the Work, pursuant to the specific procedures set forth herein for initial interpretations, Change Proposals, and acceptance of the Work. In rendering such decisions and judgments, Engineer will not show partiality to Owner or Contractor, and will not be liable to Owner, Contractor, or others in connection with any proceedings, interpretations, decisions, or judgments conducted or rendered in good faith.

10.08 *Limitations on Engineer's Authority and Responsibilities*

A. Neither Engineer's authority or responsibility under this Article 10 or under any other provision of the Contract, nor any decision made by Engineer in good faith either to exercise or not exercise such authority or responsibility or the undertaking, exercise, or performance of any authority or responsibility by Engineer, shall create, impose, or give rise to any duty in

Copyright © 2013 National Society of Professional Engineers, American Council of Engineering Companies, and American Society of Civil Engineers. All rights reserved.

contract, tort, or otherwise owed by Engineer to Contractor, any Subcontractor, any Supplier, any other individual or entity, or to any surety for or employee or agent of any of them.

B. Engineer will not supervise, direct, control, or have authority over or be responsible for Contractor's means, methods, techniques, sequences, or procedures of construction, or the safety precautions and programs incident thereto, or for any failure of Contractor to comply with Laws and Regulations applicable to the performance of the Work. Engineer will not be responsible for Contractor's failure to perform the Work in accordance with the Contract Documents.

C. Engineer will not be responsible for the acts or omissions of Contractor or of any Subcontractor, any Supplier, or of any other individual or entity performing any of the Work.

D. Engineer's review of the final Application for Payment and accompanying documentation and all maintenance and operating instructions, schedules, guarantees, bonds, certificates of inspection, tests and approvals, and other documentation required to be delivered by Paragraph 15.06.A will only be to determine generally that their content complies with the requirements of, and in the case of certificates of inspections, tests, and approvals, that the results certified indicate compliance with the Contract Documents.

E. The limitations upon authority and responsibility set forth in this Paragraph 10.08 shall also apply to the Resident Project Representative, if any.

10.09 *Compliance with Safety Program*

A. While at the Site, Engineer's employees and representatives will comply with the specific applicable requirements of Owner's and Contractor's safety programs (if any) of which Engineer has been informed.

ARTICLE 11 – AMENDING THE CONTRACT DOCUMENTS; CHANGES IN THE WORK

11.01 *Amending and Supplementing Contract Documents*

A. The Contract Documents may be amended or supplemented by a Change Order, a Work Change Directive, or a Field Order.

1. *Change Orders*:

a. If an amendment or supplement to the Contract Documents includes a change in the Contract Price or the Contract Times, such amendment or supplement must be set forth in a Change Order. A Change Order also may be used to establish amendments and supplements of the Contract Documents that do not affect the Contract Price or Contract Times.

b. Owner and Contractor may amend those terms and conditions of the Contract Documents that do not involve (1) the performance or acceptability of the Work, (2) the design (as set forth in the Drawings, Specifications, or otherwise), or (3) other engineering or technical matters, without the recommendation of the Engineer. Such an amendment shall be set forth in a Change Order.

2. *Work Change Directives*: A Work Change Directive will not change the Contract Price or the Contract Times but is evidence that the parties expect that the modification ordered or documented by a Work Change Directive will be incorporated in a subsequently issued Change Order, following negotiations by the parties as to the Work Change Directive's effect, if any, on the Contract Price and Contract Times; or, if negotiations are unsuccessful, by a determination under the terms of the Contract Documents

Copyright © 2013 National Society of Professional Engineers, American Council of Engineering Companies, and American Society of Civil Engineers. All rights reserved.

governing adjustments, expressly including Paragraph 11.04 regarding change of Contract Price. Contractor must submit any Change Proposal seeking an adjustment of the Contract Price or the Contract Times, or both, no later than 30 days after the completion of the Work set out in the Work Change Directive. Owner must submit any Claim seeking an adjustment of the Contract Price or the Contract Times, or both, no later than 60 days after issuance of the Work Change Directive.

3. *Field Orders*: Engineer may authorize minor changes in the Work if the changes do not involve an adjustment in the Contract Price or the Contract Times and are compatible with the design concept of the completed Project as a functioning whole as indicated by the Contract Documents. Such changes will be accomplished by a Field Order and will be binding on Owner and also on Contractor, which shall perform the Work involved promptly. If Contractor believes that a Field Order justifies an adjustment in the Contract Price or Contract Times, or both, then before proceeding with the Work at issue, Contractor shall submit a Change Proposal as provided herein.

11.02 *Owner-Authorized Changes in the Work*

A. Without invalidating the Contract and without notice to any surety, Owner may, at any time or from time to time, order additions, deletions, or revisions in the Work. Such changes shall be supported by Engineer's recommendation, to the extent the change involves the design (as set forth in the Drawings, Specifications, or otherwise), or other engineering or technical matters. Such changes may be accomplished by a Change Order, if Owner and Contractor have agreed as to the effect, if any, of the changes on Contract Times or Contract Price; or by a Work Change Directive. Upon receipt of any such document, Contractor shall promptly proceed with the Work involved; or, in the case of a deletion in the Work, promptly cease construction activities with respect to such deleted Work. Added or revised Work shall be performed under the applicable conditions of the Contract Documents. Nothing in this paragraph shall obligate Contractor to undertake work that Contractor reasonably concludes cannot be performed in a manner consistent with Contractor's safety obligations under the Contract Documents or Laws and Regulations.

11.03 *Unauthorized Changes in the Work*

A. Contractor shall not be entitled to an increase in the Contract Price or an extension of the Contract Times with respect to any work performed that is not required by the Contract Documents, as amended, modified, or supplemented, except in the case of an emergency as provided in Paragraph 7.15 or in the case of uncovering Work as provided in Paragraph 14.05.

11.04 *Change of Contract Price*

A. The Contract Price may only be changed by a Change Order. Any Change Proposal for an adjustment in the Contract Price shall comply with the provisions of Paragraph 11.06. Any Claim for an adjustment of Contract Price shall comply with the provisions of Article 12.

B. An adjustment in the Contract Price will be determined as follows:

1. where the Work involved is covered by unit prices contained in the Contract Documents, then by application of such unit prices to the quantities of the items involved (subject to the provisions of Paragraph 13.03); or

2. where the Work involved is not covered by unit prices contained in the Contract Documents, then by a mutually agreed lump sum (which may include an allowance for overhead and profit not necessarily in accordance with Paragraph 11.04.C.2); or

Copyright © 2013 National Society of Professional Engineers, American Council of Engineering Companies, and American Society of Civil Engineers. All rights reserved.

3. where the Work involved is not covered by unit prices contained in the Contract Documents and the parties do not reach mutual agreement to a lump sum, then on the basis of the Cost of the Work (determined as provided in Paragraph 13.01) plus a Contractor's fee for overhead and profit (determined as provided in Paragraph 11.04.C).

C. *Contractor's Fee*: When applicable, the Contractor's fee for overhead and profit shall be determined as follows:

1. a mutually acceptable fixed fee; or

2. if a fixed fee is not agreed upon, then a fee based on the following percentages of the various portions of the Cost of the Work:

a. for costs incurred under Paragraphs 13.01.B.1 and 13.01.B.2, the Contractor's fee shall be 15 percent;

b. for costs incurred under Paragraph 13.01.B.3, the Contractor's fee shall be five percent;

c. where one or more tiers of subcontracts are on the basis of Cost of the Work plus a fee and no fixed fee is agreed upon, the intent of Paragraphs 11.01.C.2.a and 11.01.C.2.b is that the Contractor's fee shall be based on: (1) a fee of 15 percent of the costs incurred under Paragraphs 13.01.A.1 and 13.01.A.2 by the Subcontractor that actually performs the Work, at whatever tier, and (2) with respect to Contractor itself and to any Subcontractors of a tier higher than that of the Subcontractor that actually performs the Work, a fee of five percent of the amount (fee plus underlying costs incurred) attributable to the next lower tier Subcontractor; provided, however, that for any such subcontracted work the maximum total fee to be paid by Owner shall be no greater than 27 percent of the costs incurred by the Subcontractor that actually performs the work;

d. no fee shall be payable on the basis of costs itemized under Paragraphs 13.01.B.4, 13.01.B.5, and 13.01.C;

e. the amount of credit to be allowed by Contractor to Owner for any change which results in a net decrease in cost will be the amount of the actual net decrease in cost plus a deduction in Contractor's fee by an amount equal to five percent of such net decrease; and

f. when both additions and credits are involved in any one change, the adjustment in Contractor's fee shall be computed on the basis of the net change in accordance with Paragraphs 11.04.C.2.a through 11.04.C.2.e, inclusive.

11.05 *Change of Contract Times*

A. The Contract Times may only be changed by a Change Order. Any Change Proposal for an adjustment in the Contract Times shall comply with the provisions of Paragraph 11.06. Any Claim for an adjustment in the Contract Times shall comply with the provisions of Article 12.

B. An adjustment of the Contract Times shall be subject to the limitations set forth in Paragraph 4.05, concerning delays in Contractor's progress.

11.06 *Change Proposals*

A. Contractor shall submit a Change Proposal to Engineer to request an adjustment in the Contract Times or Contract Price; appeal an initial decision by Engineer concerning the requirements of the Contract Documents or relating to the acceptability of the Work under the Contract Documents; contest a set-off against payment due; or seek other relief under

Copyright © 2013 National Society of Professional Engineers, American Council of Engineering Companies, and American Society of Civil Engineers. All rights reserved.

the Contract. The Change Proposal shall specify any proposed change in Contract Times or Contract Price, or both, or other proposed relief, and explain the reason for the proposed change, with citations to any governing or applicable provisions of the Contract Documents.

1. *Procedures*: Contractor shall submit each Change Proposal to Engineer promptly (but in no event later than 30 days) after the start of the event giving rise thereto, or after such initial decision. The Contractor shall submit supporting data, including the proposed change in Contract Price or Contract Time (if any), to the Engineer and Owner within 15 days after the submittal of the Change Proposal. The supporting data shall be accompanied by a written statement that the supporting data are accurate and complete, and that any requested time or price adjustment is the entire adjustment to which Contractor believes it is entitled as a result of said event. Engineer will advise Owner regarding the Change Proposal, and consider any comments or response from Owner regarding the Change Proposal.

2. *Engineer's Action*: Engineer will review each Change Proposal and, within 30 days after receipt of the Contractor's supporting data, either deny the Change Proposal in whole, approve it in whole, or deny it in part and approve it in part. Such actions shall be in writing, with a copy provided to Owner and Contractor. If Engineer does not take action on the Change Proposal within 30 days, then either Owner or Contractor may at any time thereafter submit a letter to the other party indicating that as a result of Engineer's inaction the Change Proposal is deemed denied, thereby commencing the time for appeal of the denial under Article 12.

3. *Binding Decision*: Engineer's decision will be final and binding upon Owner and Contractor, unless Owner or Contractor appeals the decision by filing a Claim under Article 12.

B. *Resolution of Certain Change Proposals*: If the Change Proposal does not involve the design (as set forth in the Drawings, Specifications, or otherwise), the acceptability of the Work, or other engineering or technical matters, then Engineer will notify the parties that the Engineer is unable to resolve the Change Proposal. For purposes of further resolution of such a Change Proposal, such notice shall be deemed a denial, and Contractor may choose to seek resolution under the terms of Article 12.

11.07 *Execution of Change Orders*

A. Owner and Contractor shall execute appropriate Change Orders covering:

1. changes in the Contract Price or Contract Times which are agreed to by the parties, including any undisputed sum or amount of time for Work actually performed in accordance with a Work Change Directive;

2. changes in Contract Price resulting from an Owner set-off, unless Contractor has duly contested such set-off;

3. changes in the Work which are: (a) ordered by Owner pursuant to Paragraph 11.02, (b) required because of Owner's acceptance of defective Work under Paragraph 14.04 or Owner's correction of defective Work under Paragraph 14.07, or (c) agreed to by the parties, subject to the need for Engineer's recommendation if the change in the Work involves the design (as set forth in the Drawings, Specifications, or otherwise), or other engineering or technical matters; and

4. changes in the Contract Price or Contract Times, or other changes, which embody the substance of any final and binding results under Paragraph 11.06, or Article 12.

Copyright © 2013 National Society of Professional Engineers, American Council of Engineering Companies, and American Society of Civil Engineers. All rights reserved.

B. If Owner or Contractor refuses to execute a Change Order that is required to be executed under the terms of this Paragraph 11.07, it shall be deemed to be of full force and effect, as if fully executed.

11.08 *Notification to Surety*

A. If the provisions of any bond require notice to be given to a surety of any change affecting the general scope of the Work or the provisions of the Contract Documents (including, but not limited to, Contract Price or Contract Times), the giving of any such notice will be Contractor's responsibility. The amount of each applicable bond will be adjusted to reflect the effect of any such change.

ARTICLE 12 – CLAIMS

12.01 *Claims*

A. *Claims Process*: The following disputes between Owner and Contractor shall be submitted to the Claims process set forth in this Article:

1. Appeals by Owner or Contractor of Engineer's decisions regarding Change Proposals;

2. Owner demands for adjustments in the Contract Price or Contract Times, or other relief under the Contract Documents; and

3. Disputes that Engineer has been unable to address because they do not involve the design (as set forth in the Drawings, Specifications, or otherwise), the acceptability of the Work, or other engineering or technical matters.

B. *Submittal of Claim*: The party submitting a Claim shall deliver it directly to the other party to the Contract promptly (but in no event later than 30 days) after the start of the event giving rise thereto; in the case of appeals regarding Change Proposals within 30 days of the decision under appeal. The party submitting the Claim shall also furnish a copy to the Engineer, for its information only. The responsibility to substantiate a Claim shall rest with the party making the Claim. In the case of a Claim by Contractor seeking an increase in the Contract Times or Contract Price, or both, Contractor shall certify that the Claim is made in good faith, that the supporting data are accurate and complete, and that to the best of Contractor's knowledge and belief the amount of time or money requested accurately reflects the full amount to which Contractor is entitled.

C. *Review and Resolution*: The party receiving a Claim shall review it thoroughly, giving full consideration to its merits. The two parties shall seek to resolve the Claim through the exchange of information and direct negotiations. The parties may extend the time for resolving the Claim by mutual agreement. All actions taken on a Claim shall be stated in writing and submitted to the other party, with a copy to Engineer.

D. *Mediation*:

1. At any time after initiation of a Claim, Owner and Contractor may mutually agree to mediation of the underlying dispute. The agreement to mediate shall stay the Claim submittal and response process.

2. If Owner and Contractor agree to mediation, then after 60 days from such agreement, either Owner or Contractor may unilaterally terminate the mediation process, and the Claim submittal and decision process shall resume as of the date of the termination. If the mediation proceeds but is unsuccessful in resolving the dispute, the Claim submittal

Copyright © 2013 National Society of Professional Engineers, American Council of Engineering Companies, and American Society of Civil Engineers. All rights reserved.

and decision process shall resume as of the date of the conclusion of the mediation, as determined by the mediator.

3. Owner and Contractor shall each pay one-half of the mediator's fees and costs.

E. *Partial Approval*: If the party receiving a Claim approves the Claim in part and denies it in part, such action shall be final and binding unless within 30 days of such action the other party invokes the procedure set forth in Article 17 for final resolution of disputes.

F. *Denial of Claim*: If efforts to resolve a Claim are not successful, the party receiving the Claim may deny it by giving written notice of denial to the other party. If the receiving party does not take action on the Claim within 90 days, then either Owner or Contractor may at any time thereafter submit a letter to the other party indicating that as a result of the inaction, the Claim is deemed denied, thereby commencing the time for appeal of the denial. A denial of the Claim shall be final and binding unless within 30 days of the denial the other party invokes the procedure set forth in Article 17 for the final resolution of disputes.

G. *Final and Binding Results*: If the parties reach a mutual agreement regarding a Claim, whether through approval of the Claim, direct negotiations, mediation, or otherwise; or if a Claim is approved in part and denied in part, or denied in full, and such actions become final and binding; then the results of the agreement or action on the Claim shall be incorporated in a Change Order to the extent they affect the Contract, including the Work, the Contract Times, or the Contract Price.

ARTICLE 13 – COST OF THE WORK; ALLOWANCES; UNIT PRICE WORK

13.01 *Cost of the Work*

A. *Purposes for Determination of Cost of the Work*: The term Cost of the Work means the sum of all costs necessary for the proper performance of the Work at issue, as further defined below. The provisions of this Paragraph 13.01 are used for two distinct purposes:

1. To determine Cost of the Work when Cost of the Work is a component of the Contract Price, under cost-plus-fee, time-and-materials, or other cost-based terms; or

2. To determine the value of a Change Order, Change Proposal, Claim, set-off, or other adjustment in Contract Price. When the value of any such adjustment is determined on the basis of Cost of the Work, Contractor is entitled only to those additional or incremental costs required because of the change in the Work or because of the event giving rise to the adjustment.

B. *Costs Included*: Except as otherwise may be agreed to in writing by Owner, costs included in the Cost of the Work shall be in amounts no higher than those prevailing in the locality of the Project, shall not include any of the costs itemized in Paragraph 13.01.C, and shall include only the following items:

1. Payroll costs for employees in the direct employ of Contractor in the performance of the Work under schedules of job classifications agreed upon by Owner and Contractor. Such employees shall include, without limitation, superintendents, foremen, and other personnel employed full time on the Work. Payroll costs for employees not employed full time on the Work shall be apportioned on the basis of their time spent on the Work. Payroll costs shall include, but not be limited to, salaries and wages plus the cost of fringe benefits, which shall include social security contributions, unemployment, excise, and payroll taxes, workers' compensation, health and retirement benefits, bonuses, sick leave, and vacation and holiday pay applicable thereto. The expenses of performing

Copyright © 2013 National Society of Professional Engineers, American Council of Engineering Companies, and American Society of Civil Engineers. All rights reserved.

Work outside of regular working hours, on Saturday, Sunday, or legal holidays, shall be included in the above to the extent authorized by Owner.

2. Cost of all materials and equipment furnished and incorporated in the Work, including costs of transportation and storage thereof, and Suppliers' field services required in connection therewith. All cash discounts shall accrue to Contractor unless Owner deposits funds with Contractor with which to make payments, in which case the cash discounts shall accrue to Owner. All trade discounts, rebates, and refunds and returns from sale of surplus materials and equipment shall accrue to Owner, and Contractor shall make provisions so that they may be obtained.

3. Payments made by Contractor to Subcontractors for Work performed by Subcontractors. If required by Owner, Contractor shall obtain competitive bids from subcontractors acceptable to Owner and Contractor and shall deliver such bids to Owner, who will then determine, with the advice of Engineer, which bids, if any, will be acceptable. If any subcontract provides that the Subcontractor is to be paid on the basis of Cost of the Work plus a fee, the Subcontractor's Cost of the Work and fee shall be determined in the same manner as Contractor's Cost of the Work and fee as provided in this Paragraph 13.01.

4. Costs of special consultants (including but not limited to engineers, architects, testing laboratories, surveyors, attorneys, and accountants) employed for services specifically related to the Work.

5. Supplemental costs including the following:

    a. The proportion of necessary transportation, travel, and subsistence expenses of Contractor's employees incurred in discharge of duties connected with the Work.

    b. Cost, including transportation and maintenance, of all materials, supplies, equipment, machinery, appliances, office, and temporary facilities at the Site, and hand tools not owned by the workers, which are consumed in the performance of the Work, and cost, less market value, of such items used but not consumed which remain the property of Contractor.

    c. Rentals of all construction equipment and machinery, and the parts thereof, whether rented from Contractor or others in accordance with rental agreements approved by Owner with the advice of Engineer, and the costs of transportation, loading, unloading, assembly, dismantling, and removal thereof. All such costs shall be in accordance with the terms of said rental agreements. The rental of any such equipment, machinery, or parts shall cease when the use thereof is no longer necessary for the Work.

    d. Sales, consumer, use, and other similar taxes related to the Work, and for which Contractor is liable, as imposed by Laws and Regulations.

    e. Deposits lost for causes other than negligence of Contractor, any Subcontractor, or anyone directly or indirectly employed by any of them or for whose acts any of them may be liable, and royalty payments and fees for permits and licenses.

    f. Losses and damages (and related expenses) caused by damage to the Work, not compensated by insurance or otherwise, sustained by Contractor in connection with the performance of the Work (except losses and damages within the deductible amounts of property insurance established in accordance with Paragraph 6.05), provided such losses and damages have resulted from causes other than the negligence of Contractor, any Subcontractor, or anyone directly or

Copyright © 2013 National Society of Professional Engineers, American Council of Engineering Companies, and American Society of Civil Engineers. All rights reserved.

indirectly employed by any of them or for whose acts any of them may be liable. Such losses shall include settlements made with the written consent and approval of Owner. No such losses, damages, and expenses shall be included in the Cost of the Work for the purpose of determining Contractor's fee.

g. The cost of utilities, fuel, and sanitary facilities at the Site.

h. Minor expenses such as communication service at the Site, express and courier services, and similar petty cash items in connection with the Work.

i. The costs of premiums for all bonds and insurance that Contractor is required by the Contract Documents to purchase and maintain.

C. *Costs Excluded*: The term Cost of the Work shall not include any of the following items:

1. Payroll costs and other compensation of Contractor's officers, executives, principals (of partnerships and sole proprietorships), general managers, safety managers, engineers, architects, estimators, attorneys, auditors, accountants, purchasing and contracting agents, expediters, timekeepers, clerks, and other personnel employed by Contractor, whether at the Site or in Contractor's principal or branch office for general administration of the Work and not specifically included in the agreed upon schedule of job classifications referred to in Paragraph 13.01.B.1 or specifically covered by Paragraph 13.01.B.4. The payroll costs and other compensation excluded here are to be considered administrative costs covered by the Contractor's fee.

2. Expenses of Contractor's principal and branch offices other than Contractor's office at the Site.

3. Any part of Contractor's capital expenses, including interest on Contractor's capital employed for the Work and charges against Contractor for delinquent payments.

4. Costs due to the negligence of Contractor, any Subcontractor, or anyone directly or indirectly employed by any of them or for whose acts any of them may be liable, including but not limited to, the correction of defective Work, disposal of materials or equipment wrongly supplied, and making good any damage to property.

5. Other overhead or general expense costs of any kind and the costs of any item not specifically and expressly included in Paragraph 13.01.B.

D. *Contractor's Fee*: When the Work as a whole is performed on the basis of cost-plus, Contractor's fee shall be determined as set forth in the Agreement. When the value of any Work covered by a Change Order, Change Proposal, Claim, set-off, or other adjustment in Contract Price is determined on the basis of Cost of the Work, Contractor's fee shall be determined as set forth in Paragraph 11.04.C.

E. *Documentation*: Whenever the Cost of the Work for any purpose is to be determined pursuant to this Article 13, Contractor will establish and maintain records thereof in accordance with generally accepted accounting practices and submit in a form acceptable to Engineer an itemized cost breakdown together with supporting data.

13.02 *Allowances*

A. It is understood that Contractor has included in the Contract Price all allowances so named in the Contract Documents and shall cause the Work so covered to be performed for such sums and by such persons or entities as may be acceptable to Owner and Engineer.

Copyright © 2013 National Society of Professional Engineers, American Council of Engineering Companies, and American Society of Civil Engineers. All rights reserved.

B. *Cash Allowances*: Contractor agrees that:

1. the cash allowances include the cost to Contractor (less any applicable trade discounts) of materials and equipment required by the allowances to be delivered at the Site, and all applicable taxes; and

2. Contractor's costs for unloading and handling on the Site, labor, installation, overhead, profit, and other expenses contemplated for the cash allowances have been included in the Contract Price and not in the allowances, and no demand for additional payment on account of any of the foregoing will be valid.

C. *Contingency Allowance*: Contractor agrees that a contingency allowance, if any, is for the sole use of Owner to cover unanticipated costs.

D. Prior to final payment, an appropriate Change Order will be issued as recommended by Engineer to reflect actual amounts due Contractor on account of Work covered by allowances, and the Contract Price shall be correspondingly adjusted.

13.03 *Unit Price Work*

A. Where the Contract Documents provide that all or part of the Work is to be Unit Price Work, initially the Contract Price will be deemed to include for all Unit Price Work an amount equal to the sum of the unit price for each separately identified item of Unit Price Work times the estimated quantity of each item as indicated in the Agreement.

B. The estimated quantities of items of Unit Price Work are not guaranteed and are solely for the purpose of comparison of Bids and determining an initial Contract Price. Payments to Contractor for Unit Price Work will be based on actual quantities.

C. Each unit price will be deemed to include an amount considered by Contractor to be adequate to cover Contractor's overhead and profit for each separately identified item.

D. Engineer will determine the actual quantities and classifications of Unit Price Work performed by Contractor. Engineer will review with Contractor the Engineer's preliminary determinations on such matters before rendering a written decision thereon (by recommendation of an Application for Payment or otherwise). Engineer's written decision thereon will be final and binding (except as modified by Engineer to reflect changed factual conditions or more accurate data) upon Owner and Contractor, subject to the provisions of the following paragraph.

E. Within 30 days of Engineer's written decision under the preceding paragraph, Contractor may submit a Change Proposal, or Owner may file a Claim, seeking an adjustment in the Contract Price if:

1. the quantity of any item of Unit Price Work performed by Contractor differs materially and significantly from the estimated quantity of such item indicated in the Agreement;

2. there is no corresponding adjustment with respect to any other item of Work; and

3. Contractor believes that it is entitled to an increase in Contract Price as a result of having incurred additional expense or Owner believes that Owner is entitled to a decrease in Contract Price, and the parties are unable to agree as to the amount of any such increase or decrease.

Copyright © 2013 National Society of Professional Engineers, American Council of Engineering Companies, and American Society of Civil Engineers. All rights reserved.

ARTICLE 14 – TESTS AND INSPECTIONS; CORRECTION, REMOVAL OR ACCEPTANCE OF DEFECTIVE WORK

14.01 *Access to Work*

A. Owner, Engineer, their consultants and other representatives and personnel of Owner, independent testing laboratories, and authorities having jurisdiction will have access to the Site and the Work at reasonable times for their observation, inspection, and testing. Contractor shall provide them proper and safe conditions for such access and advise them of Contractor's safety procedures and programs so that they may comply therewith as applicable.

14.02 *Tests, Inspections, and Approvals*

A. Contractor shall give Engineer timely notice of readiness of the Work (or specific parts thereof) for all required inspections and tests, and shall cooperate with inspection and testing personnel to facilitate required inspections and tests.

B. Owner shall retain and pay for the services of an independent inspector, testing laboratory, or other qualified individual or entity to perform all inspections and tests expressly required by the Contract Documents to be furnished and paid for by Owner, except that costs incurred in connection with tests or inspections of covered Work shall be governed by the provisions of Paragraph 14.05.

C. If Laws or Regulations of any public body having jurisdiction require any Work (or part thereof) specifically to be inspected, tested, or approved by an employee or other representative of such public body, Contractor shall assume full responsibility for arranging and obtaining such inspections, tests, or approvals, pay all costs in connection therewith, and furnish Engineer the required certificates of inspection or approval.

D. Contractor shall be responsible for arranging, obtaining, and paying for all inspections and tests required:

1. by the Contract Documents, unless the Contract Documents expressly allocate responsibility for a specific inspection or test to Owner;

2. to attain Owner's and Engineer's acceptance of materials or equipment to be incorporated in the Work;

3. by manufacturers of equipment furnished under the Contract Documents;

4. for testing, adjusting, and balancing of mechanical, electrical, and other equipment to be incorporated into the Work; and

5. for acceptance of materials, mix designs, or equipment submitted for approval prior to Contractor's purchase thereof for incorporation in the Work.

Such inspections and tests shall be performed by independent inspectors, testing laboratories, or other qualified individuals or entities acceptable to Owner and Engineer.

E. If the Contract Documents require the Work (or part thereof) to be approved by Owner, Engineer, or another designated individual or entity, then Contractor shall assume full responsibility for arranging and obtaining such approvals.

F. If any Work (or the work of others) that is to be inspected, tested, or approved is covered by Contractor without written concurrence of Engineer, Contractor shall, if requested by Engineer, uncover such Work for observation. Such uncovering shall be at Contractor's expense unless Contractor had given Engineer timely notice of Contractor's intention to

Copyright © 2013 National Society of Professional Engineers, American Council of Engineering Companies, and American Society of Civil Engineers. All rights reserved.

cover the same and Engineer had not acted with reasonable promptness in response to such notice.

14.03 *Defective Work*

A. *Contractor's Obligation*: It is Contractor's obligation to assure that the Work is not defective.

B. *Engineer's Authority*: Engineer has the authority to determine whether Work is defective, and to reject defective Work.

C. *Notice of Defects*: Prompt notice of all defective Work of which Owner or Engineer has actual knowledge will be given to Contractor.

D. *Correction, or Removal and Replacement*: Promptly after receipt of written notice of defective Work, Contractor shall correct all such defective Work, whether or not fabricated, installed, or completed, or, if Engineer has rejected the defective Work, remove it from the Project and replace it with Work that is not defective.

E. *Preservation of Warranties*: When correcting defective Work, Contractor shall take no action that would void or otherwise impair Owner's special warranty and guarantee, if any, on said Work.

F. *Costs and Damages*: In addition to its correction, removal, and replacement obligations with respect to defective Work, Contractor shall pay all claims, costs, losses, and damages arising out of or relating to defective Work, including but not limited to the cost of the inspection, testing, correction, removal, replacement, or reconstruction of such defective Work, fines levied against Owner by governmental authorities because the Work is defective, and the costs of repair or replacement of work of others resulting from defective Work. Prior to final payment, if Owner and Contractor are unable to agree as to the measure of such claims, costs, losses, and damages resulting from defective Work, then Owner may impose a reasonable set-off against payments due under Article 15.

14.04 *Acceptance of Defective Work*

A. If, instead of requiring correction or removal and replacement of defective Work, Owner prefers to accept it, Owner may do so (subject, if such acceptance occurs prior to final payment, to Engineer's confirmation that such acceptance is in general accord with the design intent and applicable engineering principles, and will not endanger public safety). Contractor shall pay all claims, costs, losses, and damages attributable to Owner's evaluation of and determination to accept such defective Work (such costs to be approved by Engineer as to reasonableness), and for the diminished value of the Work to the extent not otherwise paid by Contractor. If any such acceptance occurs prior to final payment, the necessary revisions in the Contract Documents with respect to the Work shall be incorporated in a Change Order. If the parties are unable to agree as to the decrease in the Contract Price, reflecting the diminished value of Work so accepted, then Owner may impose a reasonable set-off against payments due under Article 15. If the acceptance of defective Work occurs after final payment, Contractor shall pay an appropriate amount to Owner.

14.05 *Uncovering Work*

A. Engineer has the authority to require special inspection or testing of the Work, whether or not the Work is fabricated, installed, or completed.

B. If any Work is covered contrary to the written request of Engineer, then Contractor shall, if requested by Engineer, uncover such Work for Engineer's observation, and then replace the covering, all at Contractor's expense.

Copyright © 2013 National Society of Professional Engineers, American Council of Engineering Companies, and American Society of Civil Engineers. All rights reserved.

C. If Engineer considers it necessary or advisable that covered Work be observed by Engineer or inspected or tested by others, then Contractor, at Engineer's request, shall uncover, expose, or otherwise make available for observation, inspection, or testing as Engineer may require, that portion of the Work in question, and provide all necessary labor, material, and equipment.

1. If it is found that the uncovered Work is defective, Contractor shall be responsible for all claims, costs, losses, and damages arising out of or relating to such uncovering, exposure, observation, inspection, and testing, and of satisfactory replacement or reconstruction (including but not limited to all costs of repair or replacement of work of others); and pending Contractor's full discharge of this responsibility the Owner shall be entitled to impose a reasonable set-off against payments due under Article 15.

2. If the uncovered Work is not found to be defective, Contractor shall be allowed an increase in the Contract Price or an extension of the Contract Times, or both, directly attributable to such uncovering, exposure, observation, inspection, testing, replacement, and reconstruction. If the parties are unable to agree as to the amount or extent thereof, then Contractor may submit a Change Proposal within 30 days of the determination that the Work is not defective.

14.06 *Owner May Stop the Work*

A. If the Work is defective, or Contractor fails to supply sufficient skilled workers or suitable materials or equipment, or fails to perform the Work in such a way that the completed Work will conform to the Contract Documents, then Owner may order Contractor to stop the Work, or any portion thereof, until the cause for such order has been eliminated; however, this right of Owner to stop the Work shall not give rise to any duty on the part of Owner to exercise this right for the benefit of Contractor, any Subcontractor, any Supplier, any other individual or entity, or any surety for, or employee or agent of any of them.

14.07 *Owner May Correct Defective Work*

A. If Contractor fails within a reasonable time after written notice from Engineer to correct defective Work, or to remove and replace rejected Work as required by Engineer, or if Contractor fails to perform the Work in accordance with the Contract Documents, or if Contractor fails to comply with any other provision of the Contract Documents, then Owner may, after seven days written notice to Contractor, correct or remedy any such deficiency.

B. In exercising the rights and remedies under this Paragraph 14.07, Owner shall proceed expeditiously. In connection with such corrective or remedial action, Owner may exclude Contractor from all or part of the Site, take possession of all or part of the Work and suspend Contractor's services related thereto, and incorporate in the Work all materials and equipment stored at the Site or for which Owner has paid Contractor but which are stored elsewhere. Contractor shall allow Owner, Owner's representatives, agents and employees, Owner's other contractors, and Engineer and Engineer's consultants access to the Site to enable Owner to exercise the rights and remedies under this paragraph.

C. All claims, costs, losses, and damages incurred or sustained by Owner in exercising the rights and remedies under this Paragraph 14.07 will be charged against Contractor as set-offs against payments due under Article 15. Such claims, costs, losses and damages will include but not be limited to all costs of repair, or replacement of work of others destroyed or damaged by correction, removal, or replacement of Contractor's defective Work.

Copyright © 2013 National Society of Professional Engineers, American Council of Engineering Companies, and American Society of Civil Engineers. All rights reserved.

D. Contractor shall not be allowed an extension of the Contract Times because of any delay in the performance of the Work attributable to the exercise by Owner of Owner's rights and remedies under this Paragraph 14.07.

ARTICLE 15 – PAYMENTS TO CONTRACTOR; SET-OFFS; COMPLETION; CORRECTION PERIOD

15.01 *Progress Payments*

A. *Basis for Progress Payments*: The Schedule of Values established as provided in Article 2 will serve as the basis for progress payments and will be incorporated into a form of Application for Payment acceptable to Engineer. Progress payments on account of Unit Price Work will be based on the number of units completed during the pay period, as determined under the provisions of Paragraph 13.03. Progress payments for cost-based Work will be based on Cost of the Work completed by Contractor during the pay period.

B. *Applications for Payments*:

1. At least 20 days before the date established in the Agreement for each progress payment (but not more often than once a month), Contractor shall submit to Engineer for review an Application for Payment filled out and signed by Contractor covering the Work completed as of the date of the Application and accompanied by such supporting documentation as is required by the Contract Documents. If payment is requested on the basis of materials and equipment not incorporated in the Work but delivered and suitably stored at the Site or at another location agreed to in writing, the Application for Payment shall also be accompanied by a bill of sale, invoice, or other documentation warranting that Owner has received the materials and equipment free and clear of all Liens, and evidence that the materials and equipment are covered by appropriate property insurance, a warehouse bond, or other arrangements to protect Owner's interest therein, all of which must be satisfactory to Owner.

2. Beginning with the second Application for Payment, each Application shall include an affidavit of Contractor stating that all previous progress payments received on account of the Work have been applied on account to discharge Contractor's legitimate obligations associated with prior Applications for Payment.

3. The amount of retainage with respect to progress payments will be as stipulated in the Agreement.

C. *Review of Applications*:

1. Engineer will, within 10 days after receipt of each Application for Payment, including each resubmittal, either indicate in writing a recommendation of payment and present the Application to Owner, or return the Application to Contractor indicating in writing Engineer's reasons for refusing to recommend payment. In the latter case, Contractor may make the necessary corrections and resubmit the Application.

2. Engineer's recommendation of any payment requested in an Application for Payment will constitute a representation by Engineer to Owner, based on Engineer's observations of the executed Work as an experienced and qualified design professional, and on Engineer's review of the Application for Payment and the accompanying data and schedules, that to the best of Engineer's knowledge, information and belief:

a. the Work has progressed to the point indicated;

b. the quality of the Work is generally in accordance with the Contract Documents (subject to an evaluation of the Work as a functioning whole prior to or upon

Copyright © 2013 National Society of Professional Engineers, American Council of Engineering Companies, and American Society of Civil Engineers. All rights reserved.

Substantial Completion, the results of any subsequent tests called for in the Contract Documents, a final determination of quantities and classifications for Unit Price Work under Paragraph 13.03, and any other qualifications stated in the recommendation); and

c. the conditions precedent to Contractor's being entitled to such payment appear to have been fulfilled in so far as it is Engineer's responsibility to observe the Work.

3. By recommending any such payment Engineer will not thereby be deemed to have represented that:

   a. inspections made to check the quality or the quantity of the Work as it has been performed have been exhaustive, extended to every aspect of the Work in progress, or involved detailed inspections of the Work beyond the responsibilities specifically assigned to Engineer in the Contract; or

   b. there may not be other matters or issues between the parties that might entitle Contractor to be paid additionally by Owner or entitle Owner to withhold payment to Contractor.

4. Neither Engineer's review of Contractor's Work for the purposes of recommending payments nor Engineer's recommendation of any payment, including final payment, will impose responsibility on Engineer:

   a. to supervise, direct, or control the Work, or

   b. for the means, methods, techniques, sequences, or procedures of construction, or the safety precautions and programs incident thereto, or

   c. for Contractor's failure to comply with Laws and Regulations applicable to Contractor's performance of the Work, or

   d. to make any examination to ascertain how or for what purposes Contractor has used the money paid on account of the Contract Price, or

   e. to determine that title to any of the Work, materials, or equipment has passed to Owner free and clear of any Liens.

5. Engineer may refuse to recommend the whole or any part of any payment if, in Engineer's opinion, it would be incorrect to make the representations to Owner stated in Paragraph 15.01.C.2.

6. Engineer will recommend reductions in payment (set-offs) necessary in Engineer's opinion to protect Owner from loss because:

   a. the Work is defective, requiring correction or replacement;

   b. the Contract Price has been reduced by Change Orders;

   c. Owner has been required to correct defective Work in accordance with Paragraph 14.07, or has accepted defective Work pursuant to Paragraph 14.04;

   d. Owner has been required to remove or remediate a Hazardous Environmental Condition for which Contractor is responsible; or

   e. Engineer has actual knowledge of the occurrence of any of the events that would constitute a default by Contractor and therefore justify termination for cause under the Contract Documents.

Copyright © 2013 National Society of Professional Engineers, American Council of Engineering Companies, and American Society of Civil Engineers. All rights reserved.

D. *Payment Becomes Due*:

1. Ten days after presentation of the Application for Payment to Owner with Engineer's recommendation, the amount recommended (subject to any Owner set-offs) will become due, and when due will be paid by Owner to Contractor.

E. *Reductions in Payment by Owner*:

1. In addition to any reductions in payment (set-offs) recommended by Engineer, Owner is entitled to impose a set-off against payment based on any of the following:

   a. claims have been made against Owner on account of Contractor's conduct in the performance or furnishing of the Work, or Owner has incurred costs, losses, or damages on account of Contractor's conduct in the performance or furnishing of the Work, including but not limited to claims, costs, losses, or damages from workplace injuries, adjacent property damage, non-compliance with Laws and Regulations, and patent infringement;

   b. Contractor has failed to take reasonable and customary measures to avoid damage, delay, disruption, and interference with other work at or adjacent to the Site;

   c. Contractor has failed to provide and maintain required bonds or insurance;

   d. Owner has been required to remove or remediate a Hazardous Environmental Condition for which Contractor is responsible;

   e. Owner has incurred extra charges or engineering costs related to submittal reviews, evaluations of proposed substitutes, tests and inspections, or return visits to manufacturing or assembly facilities;

   f. the Work is defective, requiring correction or replacement;

   g. Owner has been required to correct defective Work in accordance with Paragraph 14.07, or has accepted defective Work pursuant to Paragraph 14.04;

   h. the Contract Price has been reduced by Change Orders;

   i. an event that would constitute a default by Contractor and therefore justify a termination for cause has occurred;

   j. liquidated damages have accrued as a result of Contractor's failure to achieve Milestones, Substantial Completion, or final completion of the Work;

   k. Liens have been filed in connection with the Work, except where Contractor has delivered a specific bond satisfactory to Owner to secure the satisfaction and discharge of such Liens;

   l. there are other items entitling Owner to a set off against the amount recommended.

2. If Owner imposes any set-off against payment, whether based on its own knowledge or on the written recommendations of Engineer, Owner will give Contractor immediate written notice (with a copy to Engineer) stating the reasons for such action and the specific amount of the reduction, and promptly pay Contractor any amount remaining after deduction of the amount so withheld. Owner shall promptly pay Contractor the amount so withheld, or any adjustment thereto agreed to by Owner and Contractor, if Contractor remedies the reasons for such action. The reduction imposed shall be binding on Contractor unless it duly submits a Change Proposal contesting the reduction.

Copyright © 2013 National Society of Professional Engineers, American Council of Engineering Companies, and American Society of Civil Engineers. All rights reserved.

3. Upon a subsequent determination that Owner's refusal of payment was not justified, the amount wrongfully withheld shall be treated as an amount due as determined by Paragraph 15.01.C.1 and subject to interest as provided in the Agreement.

15.02 *Contractor's Warranty of Title*

A. Contractor warrants and guarantees that title to all Work, materials, and equipment furnished under the Contract will pass to Owner free and clear of (1) all Liens and other title defects, and (2) all patent, licensing, copyright, or royalty obligations, no later than seven days after the time of payment by Owner.

15.03 *Substantial Completion*

A. When Contractor considers the entire Work ready for its intended use Contractor shall notify Owner and Engineer in writing that the entire Work is substantially complete and request that Engineer issue a certificate of Substantial Completion. Contractor shall at the same time submit to Owner and Engineer an initial draft of punch list items to be completed or corrected before final payment.

B. Promptly after Contractor's notification, Owner, Contractor, and Engineer shall make an inspection of the Work to determine the status of completion. If Engineer does not consider the Work substantially complete, Engineer will notify Contractor in writing giving the reasons therefor.

C. If Engineer considers the Work substantially complete, Engineer will deliver to Owner a preliminary certificate of Substantial Completion which shall fix the date of Substantial Completion. Engineer shall attach to the certificate a punch list of items to be completed or corrected before final payment. Owner shall have seven days after receipt of the preliminary certificate during which to make written objection to Engineer as to any provisions of the certificate or attached punch list. If, after considering the objections to the provisions of the preliminary certificate, Engineer concludes that the Work is not substantially complete, Engineer will, within 14 days after submission of the preliminary certificate to Owner, notify Contractor in writing that the Work is not substantially complete, stating the reasons therefor. If Owner does not object to the provisions of the certificate, or if despite consideration of Owner's objections Engineer concludes that the Work is substantially complete, then Engineer will, within said 14 days, execute and deliver to Owner and Contractor a final certificate of Substantial Completion (with a revised punch list of items to be completed or corrected) reflecting such changes from the preliminary certificate as Engineer believes justified after consideration of any objections from Owner.

D. At the time of receipt of the preliminary certificate of Substantial Completion, Owner and Contractor will confer regarding Owner's use or occupancy of the Work following Substantial Completion, review the builder's risk insurance policy with respect to the end of the builder's risk coverage, and confirm the transition to coverage of the Work under a permanent property insurance policy held by Owner. Unless Owner and Contractor agree otherwise in writing, Owner shall bear responsibility for security, operation, protection of the Work, property insurance, maintenance, heat, and utilities upon Owner's use or occupancy of the Work.

E. After Substantial Completion the Contractor shall promptly begin work on the punch list of items to be completed or corrected prior to final payment. In appropriate cases Contractor may submit monthly Applications for Payment for completed punch list items, following the progress payment procedures set forth above.

Copyright © 2013 National Society of Professional Engineers, American Council of Engineering Companies, and American Society of Civil Engineers. All rights reserved.

F. Owner shall have the right to exclude Contractor from the Site after the date of Substantial Completion subject to allowing Contractor reasonable access to remove its property and complete or correct items on the punch list.

15.04 *Partial Use or Occupancy*

A. Prior to Substantial Completion of all the Work, Owner may use or occupy any substantially completed part of the Work which has specifically been identified in the Contract Documents, or which Owner, Engineer, and Contractor agree constitutes a separately functioning and usable part of the Work that can be used by Owner for its intended purpose without significant interference with Contractor's performance of the remainder of the Work, subject to the following conditions:

1. At any time Owner may request in writing that Contractor permit Owner to use or occupy any such part of the Work that Owner believes to be substantially complete. If and when Contractor agrees that such part of the Work is substantially complete, Contractor, Owner, and Engineer will follow the procedures of Paragraph 15.03.A through E for that part of the Work.

2. At any time Contractor may notify Owner and Engineer in writing that Contractor considers any such part of the Work substantially complete and request Engineer to issue a certificate of Substantial Completion for that part of the Work.

3. Within a reasonable time after either such request, Owner, Contractor, and Engineer shall make an inspection of that part of the Work to determine its status of completion. If Engineer does not consider that part of the Work to be substantially complete, Engineer will notify Owner and Contractor in writing giving the reasons therefor. If Engineer considers that part of the Work to be substantially complete, the provisions of Paragraph 15.03 will apply with respect to certification of Substantial Completion of that part of the Work and the division of responsibility in respect thereof and access thereto.

4. No use or occupancy or separate operation of part of the Work may occur prior to compliance with the requirements of Paragraph 6.05 regarding builder's risk or other property insurance.

15.05 *Final Inspection*

A. Upon written notice from Contractor that the entire Work or an agreed portion thereof is complete, Engineer will promptly make a final inspection with Owner and Contractor and will notify Contractor in writing of all particulars in which this inspection reveals that the Work, or agreed portion thereof, is incomplete or defective. Contractor shall immediately take such measures as are necessary to complete such Work or remedy such deficiencies.

15.06 *Final Payment*

A. *Application for Payment*:

1. After Contractor has, in the opinion of Engineer, satisfactorily completed all corrections identified during the final inspection and has delivered, in accordance with the Contract Documents, all maintenance and operating instructions, schedules, guarantees, bonds, certificates or other evidence of insurance, certificates of inspection, annotated record documents (as provided in Paragraph 7.11), and other documents, Contractor may make application for final payment.

Copyright © 2013 National Society of Professional Engineers, American Council of Engineering Companies, and American Society of Civil Engineers. All rights reserved.

2. The final Application for Payment shall be accompanied (except as previously delivered) by:

   a. all documentation called for in the Contract Documents;

   b. consent of the surety, if any, to final payment;

   c. satisfactory evidence that all title issues have been resolved such that title to all Work, materials, and equipment has passed to Owner free and clear of any Liens or other title defects, or will so pass upon final payment.

   d. a list of all disputes that Contractor believes are unsettled; and

   e. complete and legally effective releases or waivers (satisfactory to Owner) of all Lien rights arising out of the Work, and of Liens filed in connection with the Work.

3. In lieu of the releases or waivers of Liens specified in Paragraph 15.06.A.2 and as approved by Owner, Contractor may furnish receipts or releases in full and an affidavit of Contractor that: (a) the releases and receipts include all labor, services, material, and equipment for which a Lien could be filed; and (b) all payrolls, material and equipment bills, and other indebtedness connected with the Work for which Owner might in any way be responsible, or which might in any way result in liens or other burdens on Owner's property, have been paid or otherwise satisfied. If any Subcontractor or Supplier fails to furnish such a release or receipt in full, Contractor may furnish a bond or other collateral satisfactory to Owner to indemnify Owner against any Lien, or Owner at its option may issue joint checks payable to Contractor and specified Subcontractors and Suppliers.

B. *Engineer's Review of Application and Acceptance*:

1. If, on the basis of Engineer's observation of the Work during construction and final inspection, and Engineer's review of the final Application for Payment and accompanying documentation as required by the Contract Documents, Engineer is satisfied that the Work has been completed and Contractor's other obligations under the Contract have been fulfilled, Engineer will, within ten days after receipt of the final Application for Payment, indicate in writing Engineer's recommendation of final payment and present the Application for Payment to Owner for payment. Such recommendation shall account for any set-offs against payment that are necessary in Engineer's opinion to protect Owner from loss for the reasons stated above with respect to progress payments. At the same time Engineer will also give written notice to Owner and Contractor that the Work is acceptable, subject to the provisions of Paragraph 15.07. Otherwise, Engineer will return the Application for Payment to Contractor, indicating in writing the reasons for refusing to recommend final payment, in which case Contractor shall make the necessary corrections and resubmit the Application for Payment.

C. *Completion of Work*: The Work is complete (subject to surviving obligations) when it is ready for final payment as established by the Engineer's written recommendation of final payment.

D. *Payment Becomes Due*: Thirty days after the presentation to Owner of the final Application for Payment and accompanying documentation, the amount recommended by Engineer (less any further sum Owner is entitled to set off against Engineer's recommendation, including but not limited to set-offs for liquidated damages and set-offs allowed under the provisions above with respect to progress payments) will become due and shall be paid by Owner to Contractor.

Copyright © 2013 National Society of Professional Engineers, American Council of Engineering Companies, and American Society of Civil Engineers. All rights reserved.

15.07 *Waiver of Claims*

A. The making of final payment will not constitute a waiver by Owner of claims or rights against Contractor. Owner expressly reserves claims and rights arising from unsettled Liens, from defective Work appearing after final inspection pursuant to Paragraph 15.05, from Contractor's failure to comply with the Contract Documents or the terms of any special guarantees specified therein, from outstanding Claims by Owner, or from Contractor's continuing obligations under the Contract Documents.

B. The acceptance of final payment by Contractor will constitute a waiver by Contractor of all claims and rights against Owner other than those pending matters that have been duly submitted or appealed under the provisions of Article 17.

15.08 *Correction Period*

A. If within one year after the date of Substantial Completion (or such longer period of time as may be prescribed by the terms of any applicable special guarantee required by the Contract Documents, or by any specific provision of the Contract Documents), any Work is found to be defective, or if the repair of any damages to the Site, adjacent areas that Contractor has arranged to use through construction easements or otherwise, and other adjacent areas used by Contractor as permitted by Laws and Regulations, is found to be defective, then Contractor shall promptly, without cost to Owner and in accordance with Owner's written instructions:

1. correct the defective repairs to the Site or such other adjacent areas;
2. correct such defective Work;
3. if the defective Work has been rejected by Owner, remove it from the Project and replace it with Work that is not defective, and
4. satisfactorily correct or repair or remove and replace any damage to other Work, to the work of others, or to other land or areas resulting therefrom.

B. If Contractor does not promptly comply with the terms of Owner's written instructions, or in an emergency where delay would cause serious risk of loss or damage, Owner may have the defective Work corrected or repaired or may have the rejected Work removed and replaced. Contractor shall pay all claims, costs, losses, and damages (including but not limited to all fees and charges of engineers, architects, attorneys, and other professionals and all court or arbitration or other dispute resolution costs) arising out of or relating to such correction or repair or such removal and replacement (including but not limited to all costs of repair or replacement of work of others).

C. In special circumstances where a particular item of equipment is placed in continuous service before Substantial Completion of all the Work, the correction period for that item may start to run from an earlier date if so provided in the Specifications.

D. Where defective Work (and damage to other Work resulting therefrom) has been corrected or removed and replaced under this paragraph, the correction period hereunder with respect to such Work will be extended for an additional period of one year after such correction or removal and replacement has been satisfactorily completed.

E. Contractor's obligations under this paragraph are in addition to all other obligations and warranties. The provisions of this paragraph shall not be construed as a substitute for, or a waiver of, the provisions of any applicable statute of limitation or repose.

Copyright © 2013 National Society of Professional Engineers, American Council of Engineering Companies, and American Society of Civil Engineers. All rights reserved.

ARTICLE 16 – SUSPENSION OF WORK AND TERMINATION

16.01 *Owner May Suspend Work*

A. At any time and without cause, Owner may suspend the Work or any portion thereof for a period of not more than 90 consecutive days by written notice to Contractor and Engineer. Such notice will fix the date on which Work will be resumed. Contractor shall resume the Work on the date so fixed. Contractor shall be entitled to an adjustment in the Contract Price or an extension of the Contract Times, or both, directly attributable to any such suspension. Any Change Proposal seeking such adjustments shall be submitted no later than 30 days after the date fixed for resumption of Work.

16.02 *Owner May Terminate for Cause*

A. The occurrence of any one or more of the following events will constitute a default by Contractor and justify termination for cause:

1. Contractor's persistent failure to perform the Work in accordance with the Contract Documents (including, but not limited to, failure to supply sufficient skilled workers or suitable materials or equipment or failure to adhere to the Progress Schedule);

2. Failure of Contractor to perform or otherwise to comply with a material term of the Contract Documents;

3. Contractor's disregard of Laws or Regulations of any public body having jurisdiction; or

4. Contractor's repeated disregard of the authority of Owner or Engineer.

B. If one or more of the events identified in Paragraph 16.02.A occurs, then after giving Contractor (and any surety) ten days written notice that Owner is considering a declaration that Contractor is in default and termination of the contract, Owner may proceed to:

1. declare Contractor to be in default, and give Contractor (and any surety) notice that the Contract is terminated; and

2. enforce the rights available to Owner under any applicable performance bond.

C. Subject to the terms and operation of any applicable performance bond, if Owner has terminated the Contract for cause, Owner may exclude Contractor from the Site, take possession of the Work, incorporate in the Work all materials and equipment stored at the Site or for which Owner has paid Contractor but which are stored elsewhere, and complete the Work as Owner may deem expedient.

D. Owner may not proceed with termination of the Contract under Paragraph 16.02.B if Contractor within seven days of receipt of notice of intent to terminate begins to correct its failure to perform and proceeds diligently to cure such failure.

E. If Owner proceeds as provided in Paragraph 16.02.B, Contractor shall not be entitled to receive any further payment until the Work is completed. If the unpaid balance of the Contract Price exceeds the cost to complete the Work, including all related claims, costs, losses, and damages (including but not limited to all fees and charges of engineers, architects, attorneys, and other professionals) sustained by Owner, such excess will be paid to Contractor. If the cost to complete the Work including such related claims, costs, losses, and damages exceeds such unpaid balance, Contractor shall pay the difference to Owner. Such claims, costs, losses, and damages incurred by Owner will be reviewed by Engineer as to their reasonableness and, when so approved by Engineer, incorporated in a Change Order. When

Copyright © 2013 National Society of Professional Engineers, American Council of Engineering Companies, and American Society of Civil Engineers. All rights reserved.

exercising any rights or remedies under this paragraph, Owner shall not be required to obtain the lowest price for the Work performed.

F. Where Contractor's services have been so terminated by Owner, the termination will not affect any rights or remedies of Owner against Contractor then existing or which may thereafter accrue, or any rights or remedies of Owner against Contractor or any surety under any payment bond or performance bond. Any retention or payment of money due Contractor by Owner will not release Contractor from liability.

G. If and to the extent that Contractor has provided a performance bond under the provisions of Paragraph 6.01.A, the provisions of that bond shall govern over any inconsistent provisions of Paragraphs 16.02.B and 16.02.D.

16.03 *Owner May Terminate For Convenience*

A. Upon seven days written notice to Contractor and Engineer, Owner may, without cause and without prejudice to any other right or remedy of Owner, terminate the Contract. In such case, Contractor shall be paid for (without duplication of any items):

1. completed and acceptable Work executed in accordance with the Contract Documents prior to the effective date of termination, including fair and reasonable sums for overhead and profit on such Work;

2. expenses sustained prior to the effective date of termination in performing services and furnishing labor, materials, or equipment as required by the Contract Documents in connection with uncompleted Work, plus fair and reasonable sums for overhead and profit on such expenses; and

3. other reasonable expenses directly attributable to termination, including costs incurred to prepare a termination for convenience cost proposal.

B. Contractor shall not be paid on account of loss of anticipated overhead, profits, or revenue, or other economic loss arising out of or resulting from such termination.

16.04 *Contractor May Stop Work or Terminate*

A. If, through no act or fault of Contractor, (1) the Work is suspended for more than 90 consecutive days by Owner or under an order of court or other public authority, or (2) Engineer fails to act on any Application for Payment within 30 days after it is submitted, or (3) Owner fails for 30 days to pay Contractor any sum finally determined to be due, then Contractor may, upon seven days written notice to Owner and Engineer, and provided Owner or Engineer do not remedy such suspension or failure within that time, terminate the contract and recover from Owner payment on the same terms as provided in Paragraph 16.03.

B. In lieu of terminating the Contract and without prejudice to any other right or remedy, if Engineer has failed to act on an Application for Payment within 30 days after it is submitted, or Owner has failed for 30 days to pay Contractor any sum finally determined to be due, Contractor may, seven days after written notice to Owner and Engineer, stop the Work until payment is made of all such amounts due Contractor, including interest thereon. The provisions of this paragraph are not intended to preclude Contractor from submitting a Change Proposal for an adjustment in Contract Price or Contract Times or otherwise for expenses or damage directly attributable to Contractor's stopping the Work as permitted by this paragraph.

Copyright © 2013 National Society of Professional Engineers, American Council of Engineering Companies, and American Society of Civil Engineers. All rights reserved.

ARTICLE 17 – FINAL RESOLUTION OF DISPUTES

17.01 *Methods and Procedures*

A. *Disputes Subject to Final Resolution*: The following disputed matters are subject to final resolution under the provisions of this Article:

1. A timely appeal of an approval in part and denial in part of a Claim, or of a denial in full; and

2. Disputes between Owner and Contractor concerning the Work or obligations under the Contract Documents, and arising after final payment has been made.

B. *Final Resolution of Disputes*: For any dispute subject to resolution under this Article, Owner or Contractor may:

1. elect in writing to invoke the dispute resolution process provided for in the Supplementary Conditions; or

2. agree with the other party to submit the dispute to another dispute resolution process; or

3. if no dispute resolution process is provided for in the Supplementary Conditions or mutually agreed to, give written notice to the other party of the intent to submit the dispute to a court of competent jurisdiction.

ARTICLE 18 – MISCELLANEOUS

18.01 *Giving Notice*

A. Whenever any provision of the Contract Documents requires the giving of written notice, it will be deemed to have been validly given if:

1. delivered in person, by a commercial courier service or otherwise, to the individual or to a member of the firm or to an officer of the corporation for which it is intended; or

2. delivered at or sent by registered or certified mail, postage prepaid, to the last business address known to the sender of the notice.

18.02 *Computation of Times*

A. When any period of time is referred to in the Contract by days, it will be computed to exclude the first and include the last day of such period. If the last day of any such period falls on a Saturday or Sunday or on a day made a legal holiday by the law of the applicable jurisdiction, such day will be omitted from the computation.

18.03 *Cumulative Remedies*

A. The duties and obligations imposed by these General Conditions and the rights and remedies available hereunder to the parties hereto are in addition to, and are not to be construed in any way as a limitation of, any rights and remedies available to any or all of them which are otherwise imposed or available by Laws or Regulations, by special warranty or guarantee, or by other provisions of the Contract. The provisions of this paragraph will be as effective as if repeated specifically in the Contract Documents in connection with each particular duty, obligation, right, and remedy to which they apply.

Copyright © 2013 National Society of Professional Engineers, American Council of Engineering Companies, and American Society of Civil Engineers. All rights reserved.

18.04 *Limitation of Damages*

A. With respect to any and all Change Proposals, Claims, disputes subject to final resolution, and other matters at issue, neither Owner nor Engineer, nor any of their officers, directors, members, partners, employees, agents, consultants, or subcontractors, shall be liable to Contractor for any claims, costs, losses, or damages sustained by Contractor on or in connection with any other project or anticipated project.

18.05 *No Waiver*

A. A party's non-enforcement of any provision shall not constitute a waiver of that provision, nor shall it affect the enforceability of that provision or of the remainder of this Contract.

18.06 *Survival of Obligations*

A. All representations, indemnifications, warranties, and guarantees made in, required by, or given in accordance with the Contract, as well as all continuing obligations indicated in the Contract, will survive final payment, completion, and acceptance of the Work or termination or completion of the Contract or termination of the services of Contractor.

18.07 *Controlling Law*

A. This Contract is to be governed by the law of the state in which the Project is located.

18.08 *Headings*

A. Article and paragraph headings are inserted for convenience only and do not constitute parts of these General Conditions.

Copyright © 2013 National Society of Professional Engineers, American Council of Engineering Companies, and American Society of Civil Engineers. All rights reserved.

SECTION 00 73 00

SUPPLEMENTARY CONDITIONS

TABLE OF CONTENTS

Article Number	Title
1	DEFINITIONS AND TERMINOLOGY
2	PRELIMINARY MATTERS
3	DOCUMENTS: INTENT, REQUIREMENTS, REUSE
4	COMMENCEMENT AND PROGRESS OF THE WORK
5	AVAILABILITY OF LANDS; SUBSURFACE AND PHYSICAL CONDITIONS; HAZARDOUS ENVIRONMENTAL CONDITIONS
6	BONDS AND INSURANCE
7	CONTRACTOR'S RESPONSIBILITIES
8	OTHER WORK AT THE SITE
9	OWNER'S RESPONSIBILITIES
10	ENGINEER'S STATUS DURING CONSTRUCTION
11	AMENDING THE CONTRACT DOCUMENTS; CHANGES IN THE WORK
12	CLAIMS
13	COST OF THE WORK; ALLOWANCES; UNIT PRICE WORK
14	TESTS AND INSPECTIONS; CORRECTION, REMOVAL OR ACCEPTANCE OF DEFECTIVE WORK
15	PAYMENTS TO CONTRACTOR; SET-OFFS; COMPLETION; CORRECTION PERIOD
16	SUSPENSION OF WORK AND TERMINATION
17	FINAL RESOLUTION OF DISPUTES
18	MISCELLANEOUS

SUPPLEMENTARY CONDITIONS

AMENDMENTS TO GENERAL CONDITIONS

These Supplementary Conditions amend or supplement the Standard General Conditions of the Construction Contract (EJCDC C-700, 2013 edition) and other provisions of the Contract Documents as indicated below. All provisions which are not so amended or supplemented remain in full force and effect.

ARTICLE 1. DEFINITIONS AND TERMINOLOGY

Delete the words "The individual or entity named as such in the Agreement" in 1.01.A.20 of the General Conditions, “Engineer”, and insert the following in their place:

> "The individual or entity duly appointed by the Owner to undertake the duties and powers herein assigned to the Engineer, acting either directly or through duly appointed representatives."

ARTICLE 2. PRELIMINARY MATTERS

SC-2.02

Delete paragraph 2.02A of the General Conditions in its entirety.

ARTICLE 3. DOCUMENTS: INTENT, REQUIREMENTS, REUSE

SC-3.01

Add the following sentence at the end of Paragraph 3.01A of the General Conditions:

"...by all. Each and every provision of law and clause required by law to be inserted in these Contract Documents shall be deemed to be inserted herein, and they shall be read and enforced as though it were included herein, and if through mistake or otherwise, any such provision is not inserted, or if not correctly inserted, then upon the application of either party, the Contract Documents shall forthwith be physically amended to make such insertion."

SC-3.03

Delete the last phrase of paragraph 3.03 A.3 of the General Conditions starting with "had", and substitute the following:

"knew or reasonably should have known thereof."

ARTICLE 4. COMMENCEMENT AND PROGRESS OF THE WORK

SC-4.01

Add a new paragraph immediately after paragraph 4.01A of the General Conditions which is to read as follows:

"B. Notwithstanding the time limitations provided in paragraph 4.01A, the OWNER may desire to commence the Contract Times later than the sixtieth day after the bid opening. The OWNER and CONTRACTOR, upon mutual agreement, may extend the commencement of the Contract Times to any date that they elect. OWNER must obtain CONTRACTOR's approval for extending the time beyond the dates/times stated in the Contract Documents."

SC-4.03

Add a new paragraph immediately after paragraph 4.03A of the General Conditions which is to read as follows:

"B. Engineer may check the lines, elevations and reference marks set by Contractor, and Contractor shall correct any errors disclosed by such check. Such a check shall not be considered as approval of Contractor's work and shall not relieve Contractor of the responsibility for construction of the entire Work in accordance with the Contract Documents. Contractor shall furnish personnel to assist Engineer in checking lines and grades."

SC-4.05

Delete Article 4.05A in its entirety and replace with the following:

"A. The Contractor hereby agrees that the Contractor shall have no claim for damages of any kind against the Owner or the Designer on account of any delay in the commencement or

performance of any of the work or any delay or suspension of any portion of the work, whether such delay is caused by the Owner, the Designer, or otherwise except as provided for within the prevailing statutes. The Contractor acknowledges that the Contractor's sole remedy for any such delay and/or suspension will be an extension of time as provided in the Contract Documents. The Contractor will under no circumstances be eligible for additional compensation on account of any delay even if an extension of time is granted by the Owner.

Delete Article 4.05G in its entirety and replace it with the following:

"G. Change Order requests for an extension of time under this paragraph must be submitted no later than 14 calendar days from the commencement of the event giving rise to the claimed delay, and must be accompanied by a detailed analysis identifying each action(s) or additional work item(s) which caused the delay and identifying exactly which items along the critical path were impacted or delayed. Accumulating the amount of time required to complete a series of additional work items or delays and adding this time to the original Contract Time will not be considered justification for an extension of time. To justify an extension of Contract Time, the Contractor must prove clearly and convincingly that the critical path for construction has been impacted by circumstances beyond the control of the Contractor and that the CPM schedule cannot be revised to eliminate the need for the requested time extension."

Add the following new paragraphs after paragraph 4.05G of the General Conditions:

"4.06 Liquidated Damages:

A. If the Contractor shall neglect, fail or refuse to complete the work within the time herein specified, or any proper extension thereof granted by the Owner, then the Contractor does hereby agree, as a part consideration for the awarding of this Contract, to pay to the Owner the amount specified in the Contract, not as a penalty but as liquidated damages for such breach of contract as hereinafter set forth, for each and every calendar day that the Contract shall be in default after the time stipulated in the Contract for completing the work. Such damages may be retained from time to time by the Owner from progress payments or any amounts owing to the Contractor, or otherwise collected.

B. The said amount is fixed and agreed upon by and between the Contractor and the Owner because of the impracticability and extreme difficulty of fixing and ascertaining the actual damages the Owner would in such event sustain, and said amount is agreed to be the amount of damages which the Owner would sustain and said amount shall be retained from time to time by the Owner from current periodical estimates.

C. It is further agreed that time is of the essence of each and every portion of this Contract and of the specifications wherein as definite and certain length of times if fixed for the performance of any act whatsoever; and where under the Contract an additional time is allowed for the completion of any work, the new time limit fixed by such extension shall be of the essence of this Contract. Provided that the Contractor shall not be charged with liquidated damages of any excess cost when the Owner determines that the Contractor is without fault and the Contractor's reasons for the time extension are acceptable to the Owner;

Provided, further, that the Contractor shall not be charged with liquidated damages or any excess cost when the delay in completion of the work is due:

1) to any preference, priority or allocation order duly issued by the Government;

2) to unforeseeable cause beyond the control and without the fault or negligence of the Contractor, including, but not restricted to, acts of God, or of the public enemy, acts of the Owner, acts of another Contractor in the performance of a contract with the Owner, fires, floods, epidemics, quarantine restrictions, strikes, freight embargoes, and severe weather; and

3) to any delays of subcontractors or suppliers occasioned by any of the causes specified in subsections C (1) and C (2) above;

D. Provided, further, that the Contractor shall, within thirty (30) days from the beginning of such delay, unless the Owner shall grant a further period of time prior to the date of final settlement of the Contract, notify the Owner, in writing, of the causes of the delay, who shall ascertain the facts and extent of the delay and notify the Contractor within a reasonable time of its decision in the matter."

ARTICLE 5. AVAILABILITY OF LANDS; SUBSURFACE AND PHYSICAL CONDITIONS; HAZARDOUS ENVIRONMENTAL CONDITIONS

SC-5.03

Delete the term “Supplementary Conditions” of paragraph 5.03A of the General Conditions and replace it with “Contract Documents”.

Delete the term “Supplementary Conditions” of paragraph 5.03B line 2 of the General Conditions and replace it with “Contract Documents”.

SC-5.05

Delete the following words from lines 3 and 4 of paragraph 5.05 E.1 of the General Conditions:

“...or was not shown or indicated with reasonable accuracy”

SC-5.06

Delete the term Supplementary Conditions in paragraph 5.06A of the General Conditions and replace it with “Contract Documents”.

ARTICLE 6. BONDS AND INSURANCE

NOTICE TO CONTRACTOR:

1. Proof of Insurance coverage shall be furnished to the Owner in accordance with the schedule for submittal of Bonds and Agreements.

2. Additionally, refer to Article 2. PRELIMINARY MATTERS, Paragraph SC-2.01 B of the General Conditions.

SC-6.01

Insert these sentences following SC-6.01.A of the General Conditions: The Surety Company providing the bonds shall have a rating of A or better within the Best Key Rating Guide and be licensed by the Rhode Island Department of Business Regulation Insurance Division**.** The CONTRACTOR shall pay the premiums for such Bonds.

SC-6.02

Delete paragraph 6.02D of the General Conditions in its entirety if Owner is not providing insurance policies, coverages or endorsements for the Work.

SC-6.03

Add the following to paragraph 6.03C:

"9. Independent Contractors Coverage."

The limits of liability for the insurance required by paragraph 6.03 of the General Conditions shall provide coverage for not less than the following amounts or greater where required by law:

6.03AWorkers' Compensation.

(1)	Worker's Compensation per	Statutory Requirements
(2)	Coverage B - Employer's Liability	$100,000/$500,000/$100,000

6.03B and 6.03C Commercial General Liability Limits shall include coverage for Independent Contractors, explosion, collapse and underground hazard coverage (XCU), broad form property damage, blanket contractual liability and products/completed operations. The general aggregate limits shall be endorsed so that they respond on a per project and per location basis.

Limits:

$1,000,000 each occurrence

$2,000,000 general aggregate

$2,000,000 products/completed operations aggregate

6.03D Automobile Liability for owned, hired and non-owned vehicles:

$1,000,000 Bodily Injury and Property Damage combined single limit

6.03E Umbrella or Excess Liability

Combined single limit of not less than $5,000,000 per occurrence and in the aggregate

6.03F Contractor's Pollution Liability

$2,000,000 each occurrence and $2,000,000 in the aggregate

6.03H Contractor's Professional Liability

$1,000,000 per claim and $1,000,000 in the aggregate

Delete paragraph 6.03.I.3 of the General Conditions in its entirety and insert the following in its place:

"3. contain a provision that notice of cancellation of insurance be delivered in accordance with policy provisions. In addition, the Contractor and/or its insurance broker/agent shall immediately notify the Owner and Engineer should any insurance coverage be cancelled. The Contractor shall immediately stop work on the Project and shall not resume work until the Contractor provides evidence, to the Owner and Engineer, in the form of an acceptable insurance certificate, of new insurance coverage that replaces all cancelled coverage that is required for the Project."

Add the following paragraphs to SC-6.03I of the General Conditions:

"6. If the aggregate limits of liability indicated in Contractor's insurance provided in accordance with paragraph 6.03 are not sufficient to cover all claims for damages arising from its operations under this Contract and from any other work performed by it or if the commercial general liability insurance policy of insurance does not provide that the general aggregate limits apply on a per project and per location basis, Contractor shall have the policy amended so that the aggregate limits of liability required by this Contract will be available to cover all claims for damages due to operations under this Contract.

7. Include by endorsement that the insurer shall waive all rights of subrogation in favor of the Owner, Engineer and any other party named in the written contract against whom the insurer must agree to waive rights of subrogation."

SC-6.04

Delete paragraph 6.04 of the General Conditions in its entirety.

SC-6.05

Delete paragraph 6.05 of the General Conditions in its entirety.

SC-6.06

Amend the last sentence of paragraph 6.06A of the General Conditions by striking out the words "held by Owner or Contractor as trustee or fiduciary, or." As so amended, paragraph 6.06A remains in effect.

SC-6.08

Add the following paragraph 6.08 after paragraph 6.07 of the General Conditions:

"A. If Owner has any objection to the coverage afforded by or other provisions of the insurance required to be purchased and maintained by Contractor in accordance with this Article 6 on the basis of its not complying with the Contract Documents, Owner will notify Contractor in writing thereof within thirty days of the date of delivery of such certificates to Owner in accordance with paragraph 6.02C. Contractor will provide such additional information in respect of insurance provided by him as Owner may reasonably request."

ARTICLE 7. CONTRACTOR'S RESPONSIBILITIES

SC-7.01

Delete paragraph 7.01B of the General Conditions in its entirety and replace with the following:

"B. At the site of the Work the Contractor shall employ a full-time construction superintendent or foreman who shall have full authority to act for the Contractor. It is understood that such representative shall be acceptable to the Engineer and shall be one who will be continued in the capacity for the particular job involved unless the representative ceases to be on the Contractor's payroll. If at any time during the Work the representative is deemed by the Engineer to be no longer acceptable, the representative shall be promptly replaced by the Contractor. All communications to the superintendent or foreman shall be as binding as if given to the Contractor."

SC-7.07

Delete the second sentence in paragraph 7.07A of the General Conditions.

SC-7.12

In line 2 of paragraph 7.12C of the General Conditions change “Supplementary Conditions” to “Contract Documents”.

SC-7.13

Delete the text in parentheses at the end of the third sentence of paragraph 7.13B of the General Conditions.

SC-7.16

In paragraph 7.16D.1 of the General Conditions, delete the word “timely” from the first line.

SC-7.18

Change the phrase “negligent act or omission” to “negligent or wrongful act or omission” in line 11 of paragraph 7.18A of the General Conditions.
Add the following to the end of paragraph 7.18A of the General Conditions:

> “The Contractor hereby acknowledges its obligation under the foregoing paragraph to indemnify the Engineer and Owner against judgments suffered because of the contractor's work and to assume the cost of defending the Engineer and Owner against claims as described in the foregoing paragraph."

Delete paragraph 7.18C of the General Conditions in its entirety.

ARTICLE 9. OWNER'S RESPONSIBILITIES

SC-9.02

Delete the phrase “provided Contractor makes no reasonable objection to the replacement engineer” in paragraph 9.02A of the General Conditions.

SC-9.06

Delete paragraph 9.06A of the General Conditions in its entirety.

SC-9.09

Insert the following after the first sentence of paragraph 9.09A of the General Conditions:

“However, the Owner shall have the right to direct the Contractor to perform the Work according to any sequence schedule set forth in the Contract Documents or established pursuant thereto.”

ARTICLE 10. ENGINEER'S STATUS DURING CONSTRUCTION

SC-10.01

Add a new paragraph 10.01B after paragraph 10.01A of the General Conditions, which is to read as follows:

"B. Nothing contained in the Contract Documents shall be construed to create a contractual relationship of any kind (1) between the Engineer and Contractor, (2) between the Owner and a Subcontractor or Subcontractors, or (3) between any person or entities other than the Owner and Contractor. The Engineer shall, however, be entitled to performance and enforcement of obligations under the Contract Documents intended to facilitate performance of the Engineer's duties."

SC-10.02

Insert the following at the end of paragraph 10.02B of the General Conditions:

“However, the Engineer shall have the right to direct the Contractor to perform the Work according to any sequence schedule set forth in the Contract Documents or established pursuant thereto.”

SC-10.03

Delete the last sentence of paragraph 10.03A.

SC-10.08

Insert the following after the first sentence of paragraph 10.08B of the General Conditions:

“However, the Engineer shall have the right to direct the Contractor to perform the Work according to any sequence schedule set forth in the Contract Documents or established pursuant thereto.”

ARTICLE 13. COST OF THE WORK; ALLOWANCES; UNIT PRICE WORK

Delete Article 13 of the General Conditions in its entirety and replace with the following:

"A. The unit price of an item of Unit Price work shall be subject to reevaluation and adjustment under the following conditions:

(1) If the total extended bid price [Estimated Quantity times the Bid Unit Price] of a particular item of Unit Price Work amounts to 5 percent or more of the Original Contract Price and the variation in the quantity of the particular item of Unit Price Work performed by Contractor differs by more than 15 percent from the estimated quantity of such item indicated in the Agreement; and

(2) If there is no corresponding adjustment with respect to any other item of work; and

(3) If Contractor believes that Contractor has incurred additional expense as a result thereof, Contractor may make a claim for an adjustment in the Contract Price in accordance with Article 12 if the parties are unable to agree as to the effect of any such variations in the quantity of Unit Price Work performed. If Owner believes that the quantity variation entitles Owner to an adjustment in the unit price, Owner shall be entitled to an adjustment in the unit price in an amount determined by the Engineer. Engineer shall not be liable in connection with any determination relating to adjustments which is rendered in good faith."

ARTICLE 14. TESTS AND INSPECTIONS; CORRECTION, REMOVAL OR ACCEPTANCE OF DEFECTIVE WORK

SC-14.03

Delete the word “Prompt” at the beginning of paragraph 14.03C of the General Conditions.

SC-14.07

Revise paragraph 14.07A of the General Conditions as follows:

A. Delete the word “seven” and replace it with the word “ten” so that it reads “after ten days’ written notice to Contractor.”

ARTICLE 15. PAYMENTS TO CONTRACTOR; SET-OFFS; COMPLETION; CORRECTION PERIOD

SC-15.01

Delete paragraph 15.01B.3 of the General Conditions and insert the following in its place:

"3. Retainage with respect to progress payments will be five percent or, if stipulated, the maximum allowed by law."

Delete the word “immediate” from subparagraph 15.01E.2 of the General Conditions.

Delete subparagraph 15.01E.3 of the General Conditions in its entirety.

SC-15.02

Delete paragraph 15.02A in its entirety and insert the following in its place:

"A. Contractor warrants and guarantees that title to all work, material and equipment covered by any Application for Payment, whether incorporated in the Project or not, will pass to Owner no later than at the time of Application for Payment free and clear of all liens. Contractor shall provide written transfer of title and a certified paid invoice provided by the supplier."

SC-15.03

Delete the third sentence of paragraph 15.03C of the General conditions and replace it with the following:

> “Owner shall review the preliminary certificate and make written objection to Engineer as to any provisions of the certificate or attached punch list.”

In the same paragraph, delete the phrase “within 14 days after submission of the preliminary certificate to Owner” in the fourth sentence; delete the phrase “within said 14 days” in the fifth sentence.

SC-15.06

Delete from paragraph 15.06B.1 of the General Conditions the phrase “within 10 days after receipt of the final Application for Payment,” in the first sentence.

SC-15.08

Delete paragraph 15.08A of the General Conditions and insert the following in its place:

"A. If within one year after the date of Substantial Completion or such longer period of time as may be prescribed by Laws or Regulations or by the terms of any applicable special guarantee required by the Contract Documents or by any specific provision of the Contract Documents, any work is found to be defective, Contractor shall promptly, without cost to Owner and in accordance with Owner's written instructions: (i) correct such defective work, or, if it has been rejected by Owner, remove it from the site and replace it with work that is not defective, and (ii) satisfactorily correct or remove and replace any damage to other work or the work of others therefrom. If Contractor does not begin the repairs within ten (10) days of receipt of written notification and promptly comply with the terms of Owner's written instructions, or in an emergency where delay would cause serious risk, loss or damage, Owner may have the defective work corrected or the rejected work removed and replaced, and all claims, costs, losses and damages caused by or resulting from such removal and replacement (including but not limited to all costs of repair or replacement of work of others) will be paid by Contractor."

ARTICLE 16. SUSPENSION OF WORK AND TERMINATION

SC-16.02

Add a new paragraph immediately after paragraph 16.02 A.4 of the General Conditions which is to read as follows:

"5. If the Work to be done under this Contract shall be abandoned, or if this Contract or any part thereof shall be sublet, without the previous written consent of Owner, or if the contract or any claim thereunder shall be assigned by Contractor otherwise than as herein specified."

ARTICLE 18. MISCELLANEOUS

SC-18.09, 18.10, 18.11, 18.12

Add the following new paragraphs after paragraph 18.08 of the General Conditions:

"18.09 Assignment:

A. The Contractor shall not assign the whole or any part of this Contract or any moneys due or to become due hereunder until thirty (30) days prior notice in writing has been given to the Owner of the intention to assign, which notice shall state the identity and address of the prospective assignee. No assignment shall be made without the Owner's prior written consent. Such consent shall not be unreasonably withheld. In case the Contractor assigns all or any part of the moneys due or to become due under this Contract, the instrument of assignment shall contain a clause substantially to the effect that it is agreed that the right of the assignee in and to any moneys due or to become due to the Contractor shall be subject to prior claims of all persons, firms and corporations of services rendered or materials supplied for the performance of the work called for in this Contract.

18.10 Liability

It is understood and agreed that members of the Owner or any agent or employees of the Owner signing this Agreement shall not be personally liable hereunder for any action incurred in connection with this Agreement.

18.11 State Statutes and Regulations

See Section 00830 of these Specifications for further modifications of the General Conditions due to state statutes and regulations.

18.12 Severability

If any provision of this Agreement shall be invalid or unenforceable to any extent or in any application, then the remainder of this Agreement and of such terms and conditions, except to such extent or in such application, shall not be affected thereby, and each and every term and condition of this Agreement shall be valid and enforced to the fullest extent and in the broadest application permitted by law."

END OF SECTION

.P:\RI\Woonsocket, RI\ENG23-0204 - WWTF GT Internal Upgrades\Specifications\1 - Editing for This Project\00 73 00.00 - SUPPLEMENTARY CONDITIONS.docx

SECTION 01 11 00

CONTROL OF WORK AND MATERIALS

PART 1 – GENERAL

Not Used.

PART 2 – PRODUCTS

Not Used

PART 3 - EXECUTION

3.01 HAULING, HANDLING AND STORAGE OF MATERIALS:

A. The Contractor shall, at its own expense, handle and haul all materials furnished by it and shall remove any of its surplus materials at the completion of the work.

B. The Contractor shall provide suitable and adequate storage for equipment and materials furnished by it that are liable to injury and shall be responsible for any loss of or damage to any equipment or materials by theft, breakage, or otherwise.

C. All excavated materials and equipment to be incorporated in the Work shall be placed so as not to injure any part of the Work or existing facilities and so that free access can be had at all times to all parts of the Work and to all public utility installations in the vicinity of the work. Materials and equipment shall be kept neatly piled and compactly stored in such location as will cause a minimum of inconvenience to public travel and adjoining owners, tenants and occupants.

D. The Contractor shall be responsible for all damages to the work under construction during its progress and until final completion and acceptance even though partial payments have been made under the Contract.

E. If the Gravity Thickener mechanism arrives to the site prior to the Notice to Proceed being executed, the City will maintain proper storage of the mechanism until the Notice to Proceed is executed, at which point the Contractor shall take responsibility of storing the materials per recommended conditions by the manufacturer. If the Notice to Proceed is executed prior to the arrival of the mechanism components, the Contractor shall take responsibility of storing the materials per recommended conditions by the manufacturer.

3.02 OPEN EXCAVATIONS:

A. All open excavations shall be adequately safeguarded by providing temporary barricades, caution signs, lights and other means to prevent accidents to persons, and damage to property. The Contractor shall, at its own expense, provide suitable and safe means for completely covering all open excavations and for accommodating travel when work is

not in progress.

B. Bridges provided for access to private property during construction shall be removed when no longer required.

C. The length of open trench will be controlled by the particular surrounding conditions but shall always be confined to the limits prescribed by the Engineer.

D. If the excavation becomes a hazard, or if it excessively restricts traffic at any point, then special construction procedures shall be taken, such as limiting the length of trench and prohibiting stocking excavated material in the street.

E. All street excavations shall be completely closed at the end of each work day. Backfilling or use of steel plates of adequate strength to carry traffic shall be used.

3.03 MAINTENANCE OF TRAFFIC:

A. Unless permission to close the street is received in writing from the proper authority, all excavated materials and equipment shall be placed so that vehicular and pedestrian traffic may be safely maintained at all times.

B. Should the Chief of Police deem it necessary, uniformed officers will be assigned to direct traffic. The Contractor shall make all arrangements in obtaining uniformed officers required.

C. The Contractor shall at its own expense, as directed by the Police Traffic Control/Safety Officer, provide and erect acceptable barricades, barrier fences, traffic signs, and all other traffic devices not specifically covered in a bid item, to protect the work from traffic, pedestrians, and animals. It shall provide sufficient temporary lighting such as lanterns/flashers (electric battery operated) or other approved illuminated traffic signs and devices to afford adequate protection to the traveling public, at no additional cost to the Owner.

D. The Contractor shall furnish all construction signs that are deemed necessary by and in accordance with Part VI of the Manual on Uniform Traffic Control Devices as published by the U.S. Department of Transportation. In addition, the Contractor may be required to furnish up to 128 square feet of additional special construction warning signs. Size and exact wording of signs shall be determined by the Engineer during construction.

E. The intent of policing is to ensure public safety by direction of traffic. Police officers are not to serve as watchmen to protect the Contractor's equipment and materials.

F. Nothing contained herein shall be construed as relieving the Contractor of any of its responsibilities for protection of persons and property under the terms of the Contract.

3.04 CARE AND PROTECTION OF PROPERTY:

The Contractor shall be responsible for the preservation of all public and private property,

and shall use every precaution necessary to prevent damage thereto. If any direct or indirect damage is done to public or private property by or on account of any act, omission, neglect, or misconduct in the execution of the work on the part of the Contractor, such property shall be promptly restored by the Contractor, at its expense, to a condition similar or equal to that existing before the damage was done, to the satisfaction of the Engineer.

3.05 PROTECTION AND RELOCATION OF EXISTING STRUCTURES AND UTILITIES:

A. All existing buildings, utilities, pipes, poles, wires fences, curbs, property line markers and other structures which the Engineer decides must be preserved in place without being temporarily or permanently relocated, shall be carefully supported and protected from damage by the contractor. Should such property be damaged, it shall be restored by the Contractor, at no additional cost to the Owner.

B. The Contractor shall determine the location of all underground structures and utilities (including existing water services, drain lines, electrical lines, and sewers). Services to buildings shall be maintained, and all costs or charges resulting from damage thereto shall be paid by Contractor.

C. When fences interfere with the Contractor's operations, it shall remove and (unless otherwise specified) promptly restore them to match existing conditions. Fences shall not be removed unless written consent from the Owner is given.

D. On paved surfaces the Contractor shall not use or operate tractors, bulldozers, or other power-operated equipment with treads or wheels which are shaped so as to cut or otherwise damage such surfaces.

E. All property damaged by the Contractor's operations shall be restored to a condition at least equal to that in which it was found immediately before work was begun. Suitable materials and methods shall be used for such restoration.

F. Restoration of existing property and structures shall be carried out as promptly as practicable and shall not be left until the end of the construction period.

3.06 MAINTENANCE OF FLOW:

A. The Contractor shall at its own cost, provide for the flow of sewers and drains interrupted during the progress of the work, and shall immediately cart away and dispose of all offensive matter. The entire procedure of maintaining existing flow shall be fully discussed with the Engineer well in advance of the interruption of any flow.

B. All existing drainage facilities including, but not limited to; brooks, streams, canals, channels, ditches, culverts, catch basins and drainage piping shall be adequately safeguarded so as not to impede drainage or to cause siltation of downstream areas in any manner whatsoever. If the Contractor damages or impairs any of the aforesaid drainage

facilities, it shall repair the same within the same day.

C. At the conclusion of the work, the Contractor shall remove all silt in drainage structures caused by its operations as described in Section 01 74 13, CLEANING UP.

3.07 REJECTED MATERIALS AND DEFECTIVE WORK:

A. Materials furnished by the Contractor and condemned by the Engineer as unsuitable or not in conformity with the specifications shall forthwith be removed from the work by the Contractor, and shall not be made use of elsewhere in the work.

B. Any errors, defects or omissions in the execution of the work or in the materials furnished by the Contractor, even though they may have been passed or overlooked or have appeared after the completion of the work, discovered at any time before the final payment is made hereunder, shall be forthwith rectified and made good by and at the expense of the Contractor and in a manner satisfactory to the Engineer.

C. The Contractor shall reimburse the Owner for any expense, losses or damages incurred in consequence of any defect, error, omission or act of the Contractor or his employees, as determined by the Engineer, occurring previous to the final payment.

3.08 SANITARY REGULATIONS:

Sanitary conveniences for the use of all persons employed on the work, properly screened from public observation, shall be provided in sufficient numbers in such manner and at such locations as may be approved. The contents shall be removed and disposed of in a satisfactory manner as the occasion requires. The Contractor shall rigorously prohibit the committing of nuisances within, on or about the work. Any employees found violating these provisions shall be discharged and not again employed on the work without the written consent of the Engineer. The sanitary conveniences specified above shall be the obligation and responsibility of the Contractor.

3.09 SAFETY AND HEALTH REGULATIONS:

This project is subject to the Safety and Health regulations of the U.S. Department of Labor set forth in 29 CFR, Part 1926. Contractors shall be familiar with the requirements of these regulations.

3.10 SITE INVESTIGATION:

The Contractor acknowledges that it has satisfied itself as to the conditions existing at the site of the work, the type of equipment required to perform this work, the quality and quantity of the materials furnished insofar as this information is reasonably ascertainable from an inspection of the site, as well as from information presented by the drawings and specifications made a part of this contract. Any failure of the Contractor to acquaint itself with available information will not relieve it from the responsibility for estimating properly the difficulty or cost of successfully performing the work. The Owner assumes

no responsibility for any conclusion or interpretation made by the Contractor on the basis of the information made available by the Owner.

3.11 HANGERS, PADS, AND SUPPORTS:

A. Unless otherwise indicated, hangers and supports shall be by the trade providing the supported item.

B. Except where detailed or specified, design of hangers and supports shall be the responsibility of the Contractor. All parts of such hangers or supports shall be designed in accordance with accepted engineering practice, using a factor of safety of at least 2½.

C. When proprietary hangers, etc., are supplied, satisfactory evidence of the strength of such items shall be furnished.

D. Hangers for items hung from steel and concrete shall be centered on the vertical center of gravity of the beam.

E. Locations and sizes of openings, sleeves, concrete pads, steel frames, and other equipment supports are indicated on the drawings for bidding purposes only. Final sizes and locations of such items shall be obtained from the shop drawings.

3.12 SLEEVES, HOLES, HANGERS, INSERTS, ETC.:

A. Except where holes and openings are dimensioned, and hangers, inserts, and supports are fully called for on the architectural and structural drawings (or reference is made thereon to drawings containing such information) to accommodate mechanical or electrical items, they shall be by the mechanical or electrical trade concerned.

B. Sleeves, inserts, anchors, etc., supplied under the mechanical and electrical contracts in sufficient time to so permit, shall be set in concrete, masonry, etc., or fastened to steel deck, etc., by the respective architectural or structural trade. Where not supplied in sufficient time, installation of such items shall be the responsibility of the mechanical or electrical trade involved.

C. Nothing shall be suspended from the steel roof deck and no fastenings made to it, except with the prior permission of the Engineer. Request for permission shall be accompanied by full details of the hanger or fastener, including the weight of the item to be suspended.

D. Nailers and other wood members attached to steel or masonry, for which fasteners are not indicated on the design drawings or in the specification, shall be fastened with the equivalent of ½-inch diameter bolts at 3 feet o.c.

E. Openings for mechanical and electrical items in finished areas of the building shall be closed off with near escutcheon plates or similar closures. These closures shall be by the mechanical or electrical trade involved.

3.13 ROOF PROTECTION:

Where work must be performed over completed roofing, the roofing shall be protected by 2 layers of ½-inch thick plywood, laid with joints in the second layer offset 1/2 sheet width and length from joints in the first layer. No material shall be stored or work performed on areas of roof which are not so protected.

3.14 WEATHER PROTECTION:

The General Contractor shall install weather protection and shall furnish adequate heat in the area so protected during the months of November through March.

3.15 ELECTRIC SERVICE:

A. The Contractor shall make all necessary applications and arrangements and pay for all fees and charges for electrical energy for power and light necessary for the proper completion of this contract during its entire progress. The Contractor shall provide and pay for all temporary wiring, switches, connections, and meters.

B. There shall be sufficient electric lighting so that all work may be done in a workmanlike manner where there is not sufficient daylight.

END OF SECTION

P:\RI\Woonsocket, RI\ENG23-0204 - WWTF GT Internal Upgrades\Specifications\1 - Editing for This Project\01 11 00.00 - CONTROL OF WORK AND MATERIALS.docx

SECTION 01 12 16

SCOPE AND SEQUENCE OF WORK

PART 1 – GENERAL

1.01 WORK INCLUDED:

A. Removal and replacement of the existing gravity thickener mechanism will include the demolition and removal of all metallic components within the tank. The City has pre-purchased the replacement mechanism, including the feed well, center column, sludge collector arms, scum skimmer arms, scum collector trough, effluent weirs and launder, walkway, grating, drive, drive platform, handrail, and control panel. All other work not included in the pre-purchasing scope is the responsibility of the Contractor, including the demolition and removal of all components, any concrete coating and patch work, off-loading, storage, and installation of the new mechanism and all components included, removal and replacement of the aluminum cover with a cover provided by the Contractor, installation of a new scum line connected to the overflow pipe, removal and replacement of influent sludge piping, and any other activities pertinent to the work involved within the scope of these documents.

1.02 RELATED WORK:

A. SECTION 01 11 00 – CONTROL OF WORK AND MATERIALS

PART 2 - PRODUCTS (NOT APPLICABLE)

PART 3 - EXECUTION

3.01 GENERAL:

A. Coordinate with the City's operations staff (Jacobs Engineering) and the Solids Handling Facility Staff (Synagro Technologies) for the duration of the project. Ensure continuous access for these personnel to their equipment and processes on

site. Any and all shutdowns of existing equipment, tankage, piping, etc. must be coordinated with all parties involved with at least 24 hours notice.

B. The gravity thickener tank will remain out of commission for the duration of the mechanism installation.

C. Aside from the gravity thickener tank itself, provide for continuous uninterrupted service of all equipment, piping, and tankage during construction.

D. Refer to drawings for details of anticipated construction sequence and associated submittal requirements.

E. The Contractor shall be responsible for scheduling its activities and the activities of any subcontractors involved, to meet the completion date, or milestones, established for the contract. Scheduling of the work shall be coordinated with the Owner and Engineer.

F. The Construction Sequence Requirements shall be used by the Contractor to form a complete schedule for the project, which shall be coordinated with the Owner and Engineer. Prior to performing any work at the site, the Contractor shall submit a detailed plan to the Engineer for review. The plan shall describe the proposed sequence, methods, and timing of the work.

END OF SECTION

P:\RI\Woonsocket, RI\ENG23-0204 - WWTF GT Internal Upgrades\Specifications\1 - Editing for This Project\01 12 16.00 - SCOPE AND SEQUENCE OF WORK.docx

SECTION 01 22 00

MEASUREMENT AND PAYMENT

1. General

A. The following subsections describe the measurement of and payment for the work to be done under the items listed in Section 00 41 13, FORM OF GENERAL BID.

B. All work performed as described in these contract documents will be paid for under one or more of the items listed in the FORM OF GENERAL BID. All other activities required in connection with performance of the work, including all work required under Division 1, GENERAL REQUIREMENTS, whether described in the contract documents or mandated by applicable codes, permits and laws, will not be separately paid for unless specifically provided for in the form of general bid, but will be considered incidental to performance of the overall project.

C. Each unit or lump-sum price stated in the FORM OF GENERAL BID shall constitute full compensation as herein specified for each item of work completed in accordance with the drawings and specifications, including cleanup.

D. The payment items listed herein and in the FORM OF GENERAL BID are intended to provide full payment for the work shown on the drawings and specified herein. Any work called for or implied in the documents but not listed as a payment item shall be considered incidental to the overall project.

E. Unless otherwise noted, each item shall be furnished and installed in accordance with the technical section whether a specific applicable payment item exists or not.

2. Item 1: Gravity Thickener Internal Improvements.

A. The lump sum for this item shall constitute full compensation to the Contractor for all labor, materials, and equipment to perform the construction of the project, complete, as shown in the drawings and called for in the specifications.

END OF SECTION

P:\RI\Woonsocket, RI\ENG23-0204 - WWTF GT Internal Upgrades\Specifications\3 - Final Specs for Review\01 22 00.00 - MEASUREMENT AND PAYMENT.docx

SECTION 01 33 23

SUBMITTALS

PART 1 - GENERAL

1.01 WORK INCLUDED:

A. The Contractor shall provide the Engineer with submittals as required by the contract documents. Anticipated submittals include the following sections:
   a. 05 51 36.19 – Extruded Flat Aluminum Covers
   b. 09 90 00.00 – Painting
   c. 26 00 00.00 – Electrical
   d. 33 31 13.19 – Ductile Iron Pipe

B. Submittals for the Gravity Thickener Mechanism will be provided to the Owner and Engineer by others. Refer to Section 46 71 13.01 – Gravity Thickener Mechanism Supply for details regarding this equipment. These shop drawings will be provided to the Contractor as soon as they are available.

1.02 RELATED WORK:

A. Divisions 1 – 46 of these specifications that require submittals.

PART 2 - PRODUCTS

NOT USED

PART 3 - EXECUTION

3.01 GENERAL:

A. As required by the General Conditions, Contractor shall submit a schedule of shop and working drawing submittals.

B. The Contractor shall submit the shop and working drawing submittals either electronically or hard copy.

3.02 ELECTRONIC SUBMITTALS:

A. In accordance with the accepted schedule, the Contractor shall submit promptly to the Engineer by email (Stuyvesant.jarod@wseinc.com & Mahoney.Carolyn@wseinc.com) one electronic copy in Portable Document Format (PDF) of shop or working drawings required as noted in the specifications, of equipment, structural details and materials fabricated especially for this Contract.

B. Each electronic copy of the shop or working drawing shall be accompanied by the Engineer's standard shop drawing transmittal form, included as Exhibit 1 of this section

(use only for electronic submittals), on which is a list of the drawings, descriptions and numbers and the names of the Owner, Project, Contractor and building, equipment or structure.

C. The Contractor shall receive a shop drawing memorandum with the Engineer's approval or comments via email.

3.03 HARD COPY SUBMITTALS:

A. If instructed, in accordance with the accepted schedule, the Contractor shall submit promptly to the Engineer, by mail (to Weston & Sampson Engineers, attention: CSD), six (6) copies each of shop or working drawings required as noted in the specifications, of equipment, structural details and materials fabricated especially for this Contract.

B. Each shipment of drawings shall be accompanied by the Engineer's (if applicable) standard shop drawing transmittal form on which is a list of the drawings, descriptions and numbers and the names of the Owner, Project, Contractor and building, equipment or structure.

3.04 SHOP AND WORKING DRAWINGS:

A. Shop and working drawings shall show the principal dimensions, weight, structural and operating features, space required, clearances, type and/or brand of finish of shop coat, grease fittings, etc., depending on the subject of the drawings. When it is customary to do so, when the dimensions are of particular importance, or when so specified, the drawings shall be certified by the manufacturer or fabricator as correct for this Contract.

B. All shop and working drawings shall be submitted to the Engineer by and/or through the Contractor, who shall be responsible for obtaining shop and working drawings from his subcontractors and returning reviewed drawings to them. All shop and working drawings shall be prepared on standard size, 24-inch by 36-inch sheets, except those, which are made by changing existing standard shop or working drawings. All drawings shall be clearly marked with the names of the Owner, Project, Contractor and building, equipment or structure to which the drawing applies, and shall be suitably numbered. Each shipment of drawings shall be accompanied by the Engineer's (if applicable) standard shop drawing transmittal form on which is a list of the drawings, descriptions and numbers and the names mentioned above.

C. Only drawings that have been prepared, checked and corrected by the fabricator should be submitted to the Contractor by his subcontractors and vendors. Prior to submitting drawings to the Engineer, the Contractor shall check thoroughly all such drawings to satisfy himself that the subject matter thereof conforms to the Contract Documents in all respects. Shop drawings shall be reviewed and marked with the date, checker's name and indication of the Contractor's approval, and only then shall be submitted to the Engineer. Shop drawings unsatisfactory to the Contractor shall be returned directly to their source for correction, without submittal to the Engineer. Shop drawings submitted to the Engineer without the Contractor's approval stamp and signature will

be rejected. Any deviation from the Contract Documents indicated on the shop drawings must be identified on the drawings and in a separate submittal to the Engineer, as required in this section of the specifications and General Conditions.

D. The Contractor shall be responsible for the prompt submittal and resubmittal, as necessary, of all shop and working drawings so that there will be no delay in the work due to the absence of such drawings.

E. The Engineer will review the shop and working drawings as to their general conformance with the design concept of the project and general compliance with the information given in the Contract Documents. Corrections of comments made on the drawings during the review do not relieve the Contractor from compliance with requirements of the Contract Documents. The Contractor is responsible for: confirming and correlating all quantities and dimensions; selecting fabrication processes and techniques of construction; coordinating his work with that of all other trades; and performing his work in a safe and satisfactory manner. The review of the shop drawings is general and shall not relieve the Contractor of the responsibility for details of design, dimensions, code compliance, etc., necessary for interfacing with other components, proper fitting and construction of the work required by the Contract and for achieving the specified performance. The Engineer will review submittals two times: once upon original submission and a second time if the Engineer requires a revision or corrections. The Contractor shall reimburse the Owner amounts charged to the Owner by the Engineer for performing any review of a submittal for the third time or greater.

F. With few exceptions, shop drawings will be reviewed and returned to the Contractor within 30 days of submittal.

G. No material or equipment shall be purchased or fabricated especially for this Contract nor shall the Contractor proceed with any portion of the work, the design and details of which are dependent upon the design and details of equipment or other features for which review is required, until the required shop and working drawings have been submitted and reviewed by the Engineer as to their general conformance and compliance with the project and its Contract Documents. All materials and work involved in the construction shall then be as represented by said drawings.

H. Two copies of the shop and working drawings and/or catalog cuts will be returned to the Contractor. The Contractor shall furnish additional copies of such drawings or catalog cuts when he needs more than two copies or when so requested.

3.05 SAMPLES:

A. Samples specified in individual Sections include, but are not necessarily limited to, physical examples of the work such as sections of manufactured or fabricated work, small cuts or containers of materials, complete units of repetitively-used products, color/texture/pattern swatches and range sets, specimens for coordination of visual effect, graphic symbols, and units of work to be used by the Engineer or Owner for

independent inspection and testing, as applicable to the work.

B. The number of samples submitted shall be as specified. Submittal and processing of samples shall follow the procedures outlined for shop and working drawings unless the specifications call for a field submittal or mock-up.

C. Acceptance of samples will be acknowledged via a copy of the transmittal noting status. When samples are not acceptable, prompt resubmittal will be required.

END OF SECTION

P:\RI\Woonsocket, RI\ENG23-0204 - WWTF GT Internal Upgrades\Specifications\2 - First Draft Specs\01 33 23.00_ - SUBMITTALS.docx

EXHIBIT 1 TO SECTION 01 33 23 SUBMITTALS

SHOP DRAWING TRANSMITTAL FORM

Shop Drawing Transmittal

Weston & Sampson

Instruction for Preparing Transmittal

No action will be taken on any item unless accompanied by this form.
TRANSMITTAL NOS. to be consecutive (1, 2, 3, etc.).
Each resubmittal of same item shall use same number with suffix letter (A, B, etc.).
SPEC. SECT. NO: Only one spec. section no. to each transmittal.
DESCRIPTION: Complete identification of document or group of documents.
SOURCE: Originator of document(s) being submitted.

DRAWING NO: Identification of document(s).
CONTRACT DRAWING REFERENCE: Contract drawing number(s) showing details of document(s).
SPECIAL INSTRUCTIONS: Special cases and emergencies, changes in distribution and special handling requests, etc. should be entered here.
SIGNATURE OF CONTRACTOR: Signature of individual who reviews and approves material prior to submittal to engineer.

THIS SECTION TO BE COMPLETED BY CONTRACTOR

TRANSM. NO.	SPEC. SECT. NO.	DATE	CONTRACTORS JOB NO.	W&S JOB NO.

PROJECT NAME & CONTRACT NO.	LOCATION

TO	Attention: CSD (Mahoney.Carolyn@WSEInc.com) Weston & Sampson Engineers, Inc. 55 Walkers Brook Drive, Suite 100 Reading, MA 01867	FROM	

						BY W&S	
ITEM NO.	DESCRIPTION	SOURCE	DRAWING NO. CATALOG NO. BROUCHURE, ETC	NO. OF COPIES	CONTRACT DRAWING REF.	ACTION CODE	REVIEWED BY
1							
2							
3							
4							

THIS CERTIFIES THAT ALL ITEMS SUBMITTED HEREWITH HAVE BEEN CHECKED BY THE CONTRACTOR, ARE IN CONFORMANCE WITH THE REQUIREMENTS OF THE CONTRACT DOCUMENTS, EXCEPT AS NOTED, AND ARE APPROVED BY THE CONTRACTOR FOR THIS PROJECT.	SIGNATURE & TITLE	

THIS SECTION TO BE COMPLETED BY W&S

ACTION CODE:
1. FURNISH AS SUBMITTED
2. FURNISH AS NOTED
3. REVISE AND RESUBMIT
4. REJECTED- SEE REMARKS
5. ACKNOWLEDGEMENT
6. SUBMITTAL NOT REQUIRED, RETURNED WITHOUT REVIEW

a. INSTALLATION SHALL PROCEED ONLY WHEN ACTION CODE IS 1 OR 2
b. ACTION CODED 3 SHALL BE RESUBMITTED WITHIN TIME LIMIT SET IN CONTRACT
c. REVIEW DOES NOT RELIEVE CONTRACTOR FROM RESPONSIBILITY OF COMPLIANCE WITH ALL REQUIREMENTS OF THE CONTRACT DOCUMENTS

Weston & Sampson

SECTION 01 73 29

CUTTING, CORING AND PATCHING

PART 1 - GENERAL

1.01 WORK INCLUDED:

This Section covers the cutting, coring, rough and finish patching of holes and openings in existing structures. This includes the coring of an opening for the proposed 8" scum piping to be connected to the existing overflow line.

PART 2 - PRODUCTS

2.01 SEALING MATERIALS:

A. Mechanical seals shall be modular, adjustable, bolted, mechanical type consisting of interlocking synthetic rubber links shaped to continuously fill the annular space between the pipe and sleeve. The seal shall be rated by the manufacturer for 40 feet of head or 20 psig. Mechanical seals shall be Link-Seal, manufactured by Thunderline Corp., Wayne, MI., or approved equal.

B. Sealant shall be a two part foamed silicone elastomer as manufactured by Dow Corning Co., product No. 3-6548 silicone R.T.V.; 3M brand fire barrier products caulk C.P. 25 and 3M brand putty 303; Flame-Safe fire stop systems Fig. No. FS-500 by Thomas & Betts Corporation, or approved equal. Packing shall be a fire retardant pliable material, Fig. 310 by Sealtite Co.; White Oakum W.S.-600 by American Manufacturing Co., or approved equal. Sealant bead configuration, depth and width shall be in accordance with manufacturer's recommendations.

2.02 MISCELLANEOUS MATERIALS:

A. Bonding compound shall be Sikadur Hi-Mod epoxy by Sika Corporation, or equivalent by Euclid Chemical Corporation, Master Builders Company, or approved equal.

B. Non-shrink grout shall be Masterflow 713 by Master Builders Company; Euco N-S by Euclid Chemical Co.; Five Star Grout by U.S. Grout Corp. or approved equal.

C. Materials for finish patching shall be equal to those of adjacent construction.

PART 3 - EXECUTION

3.01 GENERAL:

A. The Contractor shall leave all chases or openings for the installation of his own or any other contractor's or subcontractor's work, or shall cut the same in existing work, and shall

see that all sleeves or forms are at the work and properly set in ample time to prevent delays. He shall see that all such chases, openings, and sleeves are located accurately and are of proper size and shape and shall consult with the Engineer and the contractors and subcontractors concerned in reference to this work.

B. In case of his failure to leave or cut all such openings or have all such sleeves provided and set in proper time, Contractor shall cut them or set them afterwards at his own expense, but in so doing he shall confine the cutting to the smallest extent possible consistent with the work to be done. In no case shall piers or structural members be cut without the written consent of the Engineer.

C. The Contractor shall not cut or alter the work of any subcontractor or any other contractor, nor permit any of his subcontractors to cut or alter the work of any other contractor or subcontractor, except with the written consent of the contractor or subcontractor whose work is to be cut or altered or with the written consent of the Engineer. All cutting and patching or repairing made necessary by the negligence, carelessness, or incompetence of the Contractor or any of his subcontractors shall be done by or at the expense of the Contractor and shall be the responsibility of the Contractor.

D. All cutting and coring shall be performed in such a manner as to limit the extent of patching.

E. All holes cut through concrete and masonry walls, slabs or arches shall be core drilled unless otherwise approved. No structural members shall be cut without the approval of the Engineer and all such cutting shall be done in a manner required by him. No holes may be drilled in beams or other structural members without obtaining prior approval. All work shall be performed by mechanics skilled in this type of work.

3.02 CORING:

A. Coring shall be performed with an approved non-impact rotary tool with diamond core drills. Size of holes shall be suitable for pipe, conduit, sleeves, equipment or mechanical seals to be installed.

B. If holes are cored through floor slabs they shall be drilled from below.

C. All equipment shall conform to OSHA standards and specifications pertaining to plugs, noise and fume pollution, wiring and maintenance.

D. Provide protection for existing equipment, utilities and critical areas against water or other damage caused by drilling operation.

E. Slurry or tailings resulting from coring operations shall be vacuumed or otherwise removed from the area following drilling.

3.03 CUTTING:

A. Cutting shall be performed with a concrete saw and diamond saw blades of proper size and application.

B. Provide for control of slurry generated by sawing operation on both sides of wall or slab.

C. When cutting a reinforced concrete wall, the cutting shall be done so as not to damage bond between the concrete and reinforcing steel left in the structure. Cut shall be made so that steel neither protrudes nor is recessed from the face of the cut.

D. Adequate bracing of area to be cut shall be installed prior to start of cutting. Check area during sawing operations for partial cracking and provide additional bracing as required to prevent a partial release of cut area during sawing operations.

E. Provide equipment of adequate size to remove cut panel.

F. For cutting a trench in a floor slab, a full-depth cut shall be made using a concrete saw for the desired width of the trench. A partial-depth cut shall be made to expose the reinforcing bars. The width of the partial cut shall be to the required lap length of the reinforcing bars. Care shall be taken not to cut exposed reinforcing bars but if any are cut, dowel holes shall be drilled and dowels epoxied in. Reinforcing of the same size, as the existing shall be tied to the existing exposed reinforcing and/or dowels with the proper lap length.

3.04 PATCHING:

Rough patching shall be such as to bring the cut or cored area flush with existing construction unless otherwise shown. Finish patching shall match existing surfaces as approved.

END OF SECTION

P:\RI\Woonsocket, RI\ENG23-0204 - WWTF GT Internal Upgrades\Specifications\1 - Editing for This Project\01 73 29.00 - CUTTING CORING AND PATCHING.docx

SECTION 01 74 13

CLEANING UP

PART 1 - GENERAL

1.01 DESCRIPTION:

The Contractor must employ at all times during the progress of its work adequate cleanup measures and safety precautions to prevent injuries to persons or damage to property. The Contractor shall immediately, upon request by the Engineer provide adequate material, equipment and labor to cleanup and make safe any and all areas deemed necessary by the Engineer.

1.02 RELATED WORK:

A. Section 00 72 00 GENERAL CONDITIONS

B. Section 01 11 00 CONTROL OF WORK AND MATERIALS

PART 2 - PRODUCTS

Not applicable

PART 3 - EXECUTION

3.01 DAILY CLEANUP:

A. The Contractor shall clean up, at least daily, all refuse, rubbish, scrap and surplus material, debris and unneeded construction equipment resulting from the construction operations and sweep the area. The site of the work and the adjacent areas affected thereby shall at all times present a neat, orderly and workmanlike appearance.

B. Upon written notification by the Engineer, the Contractor shall within 24 hours clean up those areas, which in the Engineer's opinion are in violation of this section and the above referenced sections of the specifications.

C. If in the opinion of the Engineer, the referenced areas are not satisfactorily cleaned up, all other work on the project shall stop until the cleanup is satisfactory.

3.02 MATERIAL OR DEBRIS IN DRAINAGE FACILITIES:

A. Where material or debris has washed or flowed into or has been placed in existing watercourses, ditches, gutters, drains, pipes, structures, such material or debris shall be entirely removed and satisfactorily disposed of during progress of the work, and the ditches, channels, drains, pipes, structures, and work shall, upon completion of the work,

be left in a clean and neat condition.

3.03 REMOVAL OF TEMPORARY BUILDINGS, STRUCTURES AND EQUIPMENT:

A. On or before completion of the work, the Contractor shall, unless otherwise specifically required or permitted in writing, tear down and remove all temporary buildings and structures it built; shall remove all temporary works, tools and machinery or other construction equipment it furnished; shall remove all rubbish from any grounds which it has occupied; shall remove silt fences and hay bales used for trapping sediment; and shall leave the roads and all parts of the property and adjacent property affected by its operations in a neat and satisfactory condition.

3.04 RESTORATION OF DAMAGED PROPERTY:

A. The Contractor shall restore or replace, when and as required, any property damaged by its work, equipment or employees, to a condition at least equal to that existing immediately prior to the beginning of operations. To this end the Contractor shall do as required all necessary highway or driveway, walk and landscaping work. Materials, equipment, and methods for such restoration shall be as approved by the Engineer.

3.05 FINAL CLEANUP:

A. Before acceptance by the Owner, the Contractor shall perform a final cleanup to bring the construction site to its original or specified condition. This cleanup shall include removing all trash and debris off of the premises. Before acceptance, the Engineer shall approve the condition of the site.

END OF SECTION

P:\RI\Woonsocket, RI\ENG23-0204 - WWTF GT Internal Upgrades\Specifications\1 - Editing for This Project\01 74 13.00 - CLEANING UP.docx

SECTION 01 75 13

EQUIPMENT CHECKOUT AND TESTING

PART 1 - GENERAL

1.01 DESCRIPTION:

A. The physical checkout and testing requirements in this Section are in addition to those requirements defined in the technical specifications.

1.02 RELATED WORK:

A. Section 46 71 13.02 – Gravity Thickener Mechanism Installation

1.03 DEFINITIONS:

A. Shop Testing is defined as testing that is performed by the manufacturer either at the place of manufacture, or the place of assembly, for the purpose of proving that the equipment meets the requirements of the technical specification(s).

B. Physical Checkout is defined as the process whereby the Contractor physically inspects products after they have been installed in the work, and certifies that the products have been properly and completely installed, and are ready for field testing.

C. Field Testing is defined as testing that is performed on products by the Contractor with the assistance of the manufacturer's representative, after the performance of physical checkout, for the purpose of proving that the tested products meet the specifications. While field testing can be described as "shop testing in the field", it may be required whether or not shop testing was performed on the product.

D. System Testing is defined as testing performed on a "system" normally comprised of two or more pieces of equipment, after physical checkout and field testing have been completed, for the purpose of proving that the system meets specifications. System testing is described in Section 46 71 13.02 Gravity Thickener Mechanism Installation.

E. Manufacturer's representative, sometimes referred to as the Factory-Trained Service Technician, is defined as a person provided by the manufacturer, who is qualified by training and experience to provide technical and process related advice, and/or assistance, relating to the installation or utilization of the products provided by the manufacturer. Minimum training and experience shall include not less than three years participation in similar work, including no less than three similar projects during this three year period.

1.04 SHOP TESTING:

A. When required by the specifications, shop testing shall be performed prior to delivery of

the equipment or material. If shop testing is not required by the technical specifications, provide shop testing as detailed in Paragraph 1.06. Provide a minimum of fifteen days written notice, indicating the time and place of testing. Submit the following to the Engineer for approval not less than fifteen days prior to this notice.

1. Description of the test - Outline how the tests will conform to the requirements of the specifications.

2. Testing devices that will be used in the tests - description must state how the devices will perform or what they will measure, and the device accuracy. Submit sample measurement results and catalog cuts.

3. Schedule for testing - schedule shall include frequency of measurements, personnel present, and contingency plans for equipment and/or test failure.

4. Test forms - submit samples of all forms used to record and report on shop test data. Forms shall include description of test, test date, equipment used, equipment tested, personnel present, equipment tag ID numbers, and measurements made. Forms shall have a place for signature by the chief testing person, and an officer of the manufacturer certifying that the tests results shown are true, accurate, have met the required criteria, and that the equipment will operate as indicated.

B. Submit the following to the Engineer within one week after completion of the tests.

1. Completed test forms for each device tested.

2. Completed certification.

3. A written summary of testing, reporting results.

4. A schedule for retesting, if necessary. Perform any retesting required to fulfill the specification test requirements at no additional cost to the Owner. Additional travel required by the Engineer and the Owner personnel to witness retesting shall be paid by the Contractor, at no additional cost to the Owner.

1.05 PHYSICAL CHECKOUT:

A. Physical checkout shall include the following, where applicable:

1. Verify exterior areas for backfill, grading, surfacing, drainage, landscaping, roadways, fencing, and gates.

2. Verify buildings for structure, masonry, architectural, mechanical systems, electrical/lighting, communications, and HVAC.

3. Verify concrete structures for structural integrity, finish tolerance, durability, appearance, embedded and inserted items, painting and surface applications.

4. Verify steel structures for member alignment, connection bolts torque, connection welds integrity, painting, fire proofing and surface applications.

5. Verify mechanical systems and items for setting, alignment and securing, check and adjust packing and seals, lubrication, drying out, drive connection and alignment including rotation and belt/chain tension, painting or surface applications, and tagging for project system.

6. Verify piping systems for material, size, components, direction, alignment of joints and bolts/welding, packing and seals, screens and filters and strainers, leak and pressure hydro tests, painting and color coding, hangers and anchors and expansion provision and supports, clean out of foreign matter and tagging for project system.

7. Verify electrical and control/instrumentation systems for conduit and tray installation, wire/cable material and size, circuit continuity and identification, voltage testing, ground continuity and testing, terminal installation and identification, jar switches and circuit breakers and transformers tested, substation operation tested, and tagging for project system.

8. Verify communication system including telephone, fire/smoke alarm, security, paging, closed circuit TV similar to electrical above.

9. Verify computer systems by station, function, network interface.

10. Each piece of equipment and system must be certified by the manufacturer's representative as described in subsection 1.07.

1.06 MINIMUM SHOP AND FIELD TESTING REQUIREMENTS:

If the technical specifications do not define shop and field testing requirements, the following requirements shall be acceptable.

A. Gear Drives and Reducers

1. Check gears for lash at no less than three points around the gear.

2. Rotate a full 360 degrees while checking alignment.

B. Measurement of Noise (dB)

1. Eliminate noise sources generated by adjacent construction activity prior to testing.

2. Establish a background noise level prior to testing.

3. Perform noise level testing on each installation device as required by the technical specifications.

4. The maximum acceptable noise level exposure is 85 dBA over eight hours continuous for office, shop, and other areas where the Owner's personnel will be performing their assigned duties.

C. Electrical Equipment

1. The testing standards for electrical components are those contained in Division 16 and in the pertinent technical specification(s).

1.07 SERVICES OF THE MANUFACTURER'S REPRESENTATIVE:

A. Services of manufacturer's representatives shall be provided for equipment and systems specified in Divisions 11 through 46.

1.08 CORRECTIONS TO THE WORK:

Correct any items of work failing to meet the specifications at no additional cost to the Owner. Correct the nonconforming items by re-work, modification, or replacement, at the option of the Engineer. Provide all required labor, materials, and retesting as specified herein, to verify that the equipment or system conforms to the specifications.

1.09 SAFETY:

Conduct all test procedures in compliance with all applicable safety standards and regulations.

END OF SECTION

P:\RI\Woonsocket, RI\ENG23-0204 - WWTF GT Internal Upgrades\Specifications\1 - Editing for This Project\01 75 13.00 - EQUIPMENT CHECKOUT AND TESTING.docx

SECTION 01 78 00

PROJECT CLOSEOUT

PART 1 - GENERAL

1.01 WORK INCLUDED:

A. This Section covers administrative and procedural requirements for closing out the project, including, but not limited to:

1. Checkout and Certification

2. Final Cleaning

3. Substantial Completion

4. Closeout Procedures

5. Final Completion

6. Correction/Warranty Period

B. Closeout checklist to be completed by the Engineer.

1.02 RELATED WORK:

A. General Requirements in their entirety.

B. Section 01 74 13 CLEANING UP

1.03 CHECKOUT AND CERTIFICATIONS:

A. Prior to checkout and certifications the following tasks shall be completed:

1. Construction shall be complete. For this purpose, completion of construction is defined as follows:

a. The Contractor has completed construction and erection of the work in conformance with the Contract Drawings and Specifications.

2. All shop drawings shall have final approval.

3. All shop tests shall be complete and approved test results submitted to the Engineer.

1.04 FINAL CLEANING:

A. Complete the following cleaning operations before requesting inspection for Certification of Substantial Completion.

1. Clean the site, including landscape development areas of rubbish, litter and other foreign substances. Sweep paved areas broom clean; remove stains, spills and other foreign deposits. Rake grounds that are neither paved nor planted, to smooth, even textured surfaces.

2. Remove waste and surplus materials, rubbish, fencing equipment, temporary utilities and construction facilities from the site, unless otherwise required by the Engineer.

3. Comply with requirements of Section 01 74 13 CLEANING UP.

1.05 SUBSTANTIAL COMPLETION:

A. Substantial Completion is officially defined in the General and Supplementary Conditions. The date of substantial completion will be certified by the Engineer. This date will not be certified until the following requirements have been satisfied by the Contractor:

1. All Contract requirements are coordinated into a fully complete system.

2. All field tests have been satisfactorily completed and reports forwarded to the Engineer.

1.06 CLOSEOUT PROCEDURES:

A. Submit written certification that Contract Documents have been reviewed, Work has been inspected, and is complete in accordance with Contract Documents and ready for Engineer's and Owner's inspection.

B. Accompany Engineer and Owner on inspection to verify conformance with the Contract Documents. Prepare a punch list of work items that have been determined by inspection to not conform to Contract Documents. Punch list items shall include work items that are missing, incomplete, damaged, incorrect items, or improperly installed or constructed. The Contractor shall correct the punch list deficiencies by re-work, modifications, or replacement, as appropriate, until the items conform to the Contract Documents. The initial punch list shall be produced by the Contractor, with copies to the Engineer and Owner. When the Contractor has reduced the number of deficient items to a reasonable level, the Engineer will develop a definitive punch list for the use of the Contractor.

C. Provide submittals to Engineer that are required by governing or other authorities.

D. Submit final Application for Payment identifying total adjusted Contract Sum, previous

payments, and sum remaining due. The Contractor shall submit the following documents with or prior to Final Application for Payment: Contract Completion and Acceptance Certificate, Consent of Surety to Final Payment, Affidavit of Payment of Debts and Claims, and remaining releases, waivers, warranties/guarantees, and all other data required by the Contract Documents.

1.09 FINAL COMPLETION:

A. Prior to final completion, the following tasks shall be completed:

1. All items in the punch list shall be completed.

2. All Contract closeout documentation shall be submitted to and accepted by the Engineer.

1.10 CORRECTION/WARRANTY PERIOD:

A. During the correction period, the Contractor shall correct all deficiencies in equipment and materials.

B. During the warranty period, the Contractor shall perform all corrective work on warranty deficiencies.

C. Corrective work will be identified by the Engineer or Owner, as appropriate. The Contractor will be notified of the item(s) requiring corrective work.

D. The Contractor shall begin work on all corrective work within ten days of being notified of the deficiency by the Engineer and shall then work continuously until the deficiency is corrected. Upon completion of the corrective work, the Contractor shall submit a letter report to the Engineer describing the deficiency and the corrective action that was taken.

E. The Contractor shall coordinate all corrective work with the Engineer and/or the Owner.

END OF SECTION

P:\RI\Woonsocket, RI\ENG23-0204 - WWTF GT Internal Upgrades\Specifications\1 - Editing for This Project\01 78 00.00 - PROJECT CLOSEOUT.docx

SECTION 01 78 39

PROJECT AS-BUILT RECORD DRAWINGS

PART 1 - GENERAL

1.01 WORK INCLUDED:

This Section covers the Contractors As-Built Record drawings for the project. The As-Built Record drawings for the project shall include, but are not limited to:

A. The Contractors construction coordination drawings for all the project disciplines. The Contractors construction coordination drawings for the project disciplines shall be submitted to the Engineer prior to Construction of the said discipline. The Contractors construction coordination drawings for the project disciplines shall include all disciplines. Any deviations from the manufacturers' shop drawings shall be recorded in the Contractor's version of the as-built documents. Contractor may use the shop drawings as a reference for creating as-built documents.

B. Draft Record Documents Review

Upon completion of the project construction the Contractor shall submit a complete full-size PDF copy of Record Drawings to the Owner and the Engineer for review. The Owner and the Engineer shall jointly review the Record Drawings and provide comments to the Contractor. The Contractor shall modify the Record Drawings as necessary based on the comments provided by the Owner and the Engineer.

C. Final Record Documents

Upon incorporation and acceptance of the Draft Record Drawings comments from the Owner and the Engineer, the Contractor shall submit the Final Record Drawings and documentation. The Contactor shall submit two sets of full-size, color-printed Record Drawings to the Owner for their records. The Contractor shall also submit to the Engineer and Owner the electronic Record Drawing files including a PDF of the final Record Drawings. The electronic Record Drawing files shall be obtained from the Owner (the Engineer shall provide on behalf of the Owner if the Engineer was the project designer) and developed in AutoCAD 2010 (or later) and the submittal shall include the Final AutoCAD DWG file documents, drawing line types, blocks, etc. The actual version of AutoCAD shall be coordinated with the Engineer.

1.02 RELATED WORK:

A. General Requirements in their entirety.

1.03 AS-BUILT DOCUMENTS:

A. Contractor shall maintain on site, separate from the documents used for construction, one complete set of the documents listed below, and as construction progresses, shall legibly record on these documents all changes made during construction.

1. Contract Drawings.
2. Specifications.
3. Addenda.
4. Change Orders and other Modifications to the Contract.
5. Reviewed shop drawings, product data, and samples.
6. Written interpretations and clarifications.
7. Field Orders.
8. Field test reports properly verified.

B. The completed set of documents shall include but are not limited to:

1. Significant deviations of any nature made during construction.

C. The completed set of as-built documents shall be submitted to the Engineer with the final Application for Payment.

PART 2 - MATERIALS

Not Used

PART 3 - EXECUTION

Not Used

END OF SECTION

P:\RI\Woonsocket, RI\ENG23-0204 - WWTF GT Internal Upgrades\Specifications\3 - Final Specs for Review\01 78 39.00 - PROJECT AS-BUILT RECORD DRAWINGS.docx

SECTION 02 41 19

SELECTIVE STRUCTURE DEMOLITION

PART 1 - GENERAL

1.01 WORK INCLUDED:

A. Refer to plans for detail of demolition/abandonment scope. Demolish designated interior structures and mechanical components; disconnect utilities; remove anchor bolts; grinding and sandblasting.

1.02 REGULATORY REQUIREMENTS:

A. Conform to applicable codes and requirements for demolition of structure, safety of adjacent structure, dust control, service utilities, and discovered hazards.

B. Dispose or recycle all demolition debris in accordance with all applicable regulations.

1.03 RELATED WORK:

A. Section 01 12 16 SCOPE AND SEQUENCING OF WORK
B. Section 09 90 00 PAINTING
C. Section 46 71 13.02 GRAVITY THICKENER MECHANISM INSTALLATION

1.04 SUBMITTALS: IN ACCORDANCE WITH REQUIREMENTS OF GENERAL SPECIFICATIONS, SUBMIT THE FOLLOWING:

A. In accordance with Section 01 33 23, SUBMITTALS, submit a demolition plan to the Engineer for review at least two weeks prior to the start of work, describing the proposed sequence, methods, and equipment required for the demolition and disposal. Also, indicate measures to be taken to protect new work, and structures and facilities to remain.

B. Do not proceed with the demolition until the Engineer has given written acceptance of the demolition plan. Also, no demolition work shall proceed until the new facility is complete, fully operational, and beneficial occupancy has been obtained by the Owner.

PART 2 - PRODUCTS (Not Used)

PART 3 - EXECUTION

3.01 PREPARATION:

A. Provide, erect, and maintain temporary barriers and security devices.

B. Notify Owner of procedures which may affect property, of potential noise, utility outage, or disruption. Coordinate with Owner.

C. Erect and maintain weatherproof airtight closures for exterior openings.

D. Erect and maintain temporary partitions to prevent spread of dust, odors and noise to permit continued Owner occupancy.

E. Protect existing items which are not indicated to be removed.

F. Arrange with, pay for all required fees, and perform work required by utility companies and municipal departments for discontinuance or interruptions of utility services due to demolition work.

3.02 DEMOLITION REQUIREMENTS:

A. Conduct demolition in accordance with approved plan, so as to minimize interference with adjacent building areas.

B. Under no circumstances shall explosives be used.

C. Conduct operations with minimum interference to public or private accesses.

D. Maintain protected access and egress at all times. Do not close or obstruct driveways or roadways without written consent from the City, Jacobs, and Synagro.

E. Cease operations immediately if adjacent structure appears to be in danger. Notify Engineer.

3.04 SELECTIVE DEMOLITION:

A. Demolish and remove components in an orderly and careful manner, in sequence as indicated on Drawings.

B. Protect existing supporting structural members and equipment.

C. Remove components without damaging the structural integrity of the tank walls or floor. Ensure the capability of prepping all surfaces for the installation of the proposed mechanism and painting systems as described in Sections 46 71 13.02 and 09 90 00, respectively.

D. Cut, remove, and dispose of the following items as described on the drawings:
    1. Existing mechanism and all components associated with it
    2. Existing aluminum cover and all components and anchorages associated with it.
    3. Existing bridge and walkway.
    4. Existing electrical conduit, wiring, and panels.
    5. Existing effluent weir.

6. Existing influent sludge piping.
7. Existing Plant Effluent Water piping.
8. Existing odor control piping.

3.05 CLEAN UP:

A. Remove demolished materials from site as work progresses.

B. Leave areas of work in clean condition.

3.06 SCHEDULE OF PRODUCTS TO BE REMOVED:

A. Remove the following materials and equipment to be retained by Owner. Deliver to agreed upon location by OWNER and ENGINEER.

1. All electrical and control equipment, motors, and other major equipment and appurtenances. Coordinate with Owner prior to related work.

END OF SECTION

P:\RI\Woonsocket, RI\ENG23-0204 - WWTF GT Internal Upgrades\Specifications\1 - Editing for This Project\02 41 19.00 - SELECTIVE STRUCTURE DEMOLITION.docx

SECTION 03 30 00

CAST-IN-PLACE CONCRETE

PART 1 - GENERAL

1.01 WORK INCLUDED:

This Section covers all concrete and all related items necessary to place and finish the concrete work.

1.02 RELATED WORK:

A. Section 09 90 00, PAINTING

B. Section 46 71 13.01, GRAVITY THICKENER MECHANISM SUPPLY (FOR REFERENCE)

C. Section 46 71 13.02, GRAVITY THICKENER MECHANISM INSTALLATION

D. Items furnished under other Sections and installed under this Section include, but are not limited to:

Items embedded in concrete, including anchors, sleeves, floor drains, castings, frames for hatches, angles, nosings, and other miscellaneous metals.

1.03 REFERENCES:

A. The following standards form a part of these specifications:

American Concrete Institute (ACI)

ACI	30l	Structural Concrete for Buildings
ACI	302	Recommended Practice for Concrete Floor and Slab Construction
ACI	304	Recommended Practice for Measuring, Mixing, Transporting, and Replacing Concrete
ACI	305	Recommended Practice for Hot Weather Concreting
ACI	306	Recommended Practice for Cold Weather Concreting
ACI	318	Building Code Requirements for Reinforced Concrete
ACI	347	Recommended Practice for Concrete Formwork

ACI 350 Code Requirements for Environmental Engineering Concrete Structures

ASTM International (ASTM)

ASTM	C33	Concrete Aggregates
ASTM	C39	Compressive Strength of Cylindrical Concrete Specimens
ASTM	C42	Obtaining and Testing Drilled Cores and Sawed Beams of Concrete
ASTM	C87	Effect of Organic Impurities in Fine Aggregate on Strength of Mortar
ASTM	C94	Ready-Mixed Concrete
ASTM	C109	Standard Method for Compressive Strength Testing on Grout Mortars
ASTM	C143	Standard Method for Slumps of Portland Cement Concrete
ASTM	C150	Portland Cement
ASTM	C171	Sheet Materials for Curing Concrete
ASTM	C231	Air Content of Freshly Mixed Concrete by the Pressure Method
ASTM	C260	Air-Entraining Admixtures for Concrete
ASTM	C309	Liquid Membrane-Forming Compounds for Curing Concrete
ASTM	C494	Chemical Admixtures for Concrete
ASTM	D1751	Preformed Expansion Joint Fillers for Concrete Paving and Structural Construction (Nonextruding and Resilient Bituminous Types)
ASTM	D1752	Preformed Sponge Rubber and Cork Expansion Joint Fillers for Concrete Paving and Structural Construction

1.04 SUBMITTALS: IN ACCORDANCE WITH REQUIREMENTS OF SECTION 01 33 23 SUBMITTALS, SUBMIT THE FOLLOWING:

A. Shop drawings of the materials specified herein.

B. Statement of materials constituting the design of mixes which satisfy the specified strength for each size aggregate as required by ASTM C94 shall be submitted to the Engineer within one week following award of the contract.

C. Provide one copy of the "Certificate of Delivery" for each load of concrete as it arrives on the site, under the provisions of ASTM C94.

PART 2 - PRODUCTS

2.01 CONCRETE:

A. Concrete conforming to the requirements listed below shall be used where indicated on the drawings. Unless otherwise indicated, concrete used as fill under foundations, and elsewhere approved by the Engineer, shall be the 3,000 psi mix.

TABLE

Minimum Comp. Strength at 28 days (psi)	Maximum Water/Cement ratio (gallons per bag of cement)*	Cement Factor: 94 lb. Bags per cubic yard minimum**
3000	0.59 (6.9)	5.5
4000	0.48 (5.6)	6.5
5000	0.40 (4.7)	7.4

* Based on air-entrained concrete. If non-air-entrained concrete is called for, the listed maximum water/cement ratios may be increased slightly, as approved by the Engineer. The water is the total water in the mix, including free water on the aggregate.

** These are minimum amounts; increase as necessary to meet mix requirements.

B. Concrete shall conform to ASTM C94. One copy of the Certificate of Delivery required by ASTM C94 shall be delivered to the Engineer immediately upon arrival of each load of concrete at the site. The Contractor shall be responsible for the design of the concrete mixtures.

C. Standard compression tests of all proposed mixes shall be made by the testing laboratory or other satisfactory evidence shall be presented that the design mixes will attain the minimum strengths listed on the design drawings or called for herein, within the limitations of the ACI Code. No concrete shall be delivered to the job site until the Engineer has approved the design mixes.

D. All concrete (unless otherwise directed) shall contain an air-entraining agent. Air entrained concrete shall have an air content by volume of 3 to 6 percent for l-l/2-inch

aggregate and 4 to 8 percent for 3/4-inch aggregate. The air content shall be the responsibility of the testing laboratory and in accordance with ASTM C23l.

E. All concrete shall contain a mid-range water reducer to minimize cement and water content of the mix, at the specified slump, in accordance with ASTM C494.

F. Slump for all concrete shall be from 3-inch to 4-inch, except for concrete using a superplasticizer, when the maximum slump shall be 8-inches. Any concrete having a slump greater than 4-inches (8-inches with superplasticizer) shall be promptly removed from the site.

G. No calcium chloride or admixtures containing calcium chloride shall be added to the concrete. No admixture other than those specified shall be used in concrete without the specific written permission of the Engineer in each case.

H. No additional water, except for the amount indicated by the design mix shall be added to the concrete without the prior permission of the Engineer.

2.02 CEMENT:

A. The cement shall be an approved brand of American manufactured Portland Cement, Type IIA conforming to ASTM Cl50. The brand name and type of cement proposed for use shall be submitted to the Engineer for approval immediately following award of

contract. Only one color of cement, all of the same manufacture, shall be used for the work.

B. When the use of high-early-strength Portland cement (Type IIIA) is permitted by the Engineer the same strength requirements shall apply, but the indicated strengths shall be attained in 7 days instead of 28 days.

2.03 ADMIXTURES:

A. Air entraining agent shall be in accordance with ASTM C260.

B. Water reducing agent shall be a mid-range water reducer meeting ASTM C494, Type A.

C. Water reducing agent-retarder shall be in accordance with ASTM C494, Type D.

D. Superplasticizer agent shall be in accordance with ASTM C494, Type F or Type G and contain no more than 0.1% chloride ions. Product may be plant added or field added based on the best application considering distance, temperature and time.

2.04 AGGREGATES:

A. Except as otherwise noted, the aggregate shall conform to the requirements of ASTM C33.

B. Fine aggregate shall consist of washed inert natural sand conforming to the requirements of ASTM C33.

C. Coarse aggregate shall consist of well-graded crushed stone or washed gravel conforming to the requirements of ASTM C33.

D. The following designated sizes of aggregate shall be the maximum employed in concrete.

2-inch for mass concrete
1½-inch for reinforced sections 18-inch and over in thickness
3/4-inch for reinforced and unreinforced sections less than 18-inch thickness.

2.05 WATER:

Water for concrete shall be potable, free from injurious amounts of oil, acid, alkali, organic matter and other deleterious substances.

2.06 NON-METALLIC SHRINKAGE RESISTANT GROUT:

Grout shall be mixed in the proportions of one part Portland Cement to 2 parts sand, by volume. Only sufficient water shall be used to enable grout to barely hold its shape when squeezed into a ball in the hand. Aggregate for grout shall conform to the requirements of the reference specification for concrete. Prior approval of the Engineer shall be

obtained for the use of proprietary grouts, and the instructions of the Engineer shall be followed in their use.

Grout: ASTM C 1107, factory-packaged, nonmetallic aggregate grout, noncorrosive, non-staining, mixed with water to consistency suitable for application and a 30-minute working time. The minimum ultimate compressive strength of the grout shall be 5000 psi at 7 days and 7500 psi at 28 days.

2.07 CURING MATERIALS:

A. Curing compound shall be a curing/hardener compound such as Acurion by AntiHydro, Sikaguard Cure/Hard by Sika, Super Diamond Clear by Euclid or approved equal.

B. Curing paper shall be a fiber-reinforced laminated Kraft bituminous product conforming to the requirements of ASTM Cl7l.

2.08 JOINT FILLER:

1. Preformed joint filler strip shall conform to ASTM Dl75l or Dl752, having a thickness as indicated on the drawings.

2. Fillers shall be provided in pieces of the full thickness required. Use of multiple layers of thin pieces to make-up the full thickness will not be permitted.

2.09 JOINT SEALANT:

Joint sealant for construction and control joints shall be a two-part polysulfide base sealant conforming to Thiokol's Building Trade Performance Specification, Class A (self-leveling), Type II (hardness: 35-45 Shore A).

PART 3 - EXECUTION

3.01 GENERAL:

Under no circumstances shall concrete that has set or partially set before placing be used; and no retempering of concrete or grout will be permitted.

3.02 PREPARATION:

A. Before placing concrete, forms and the space to be occupied by the concrete shall be thoroughly cleaned and reinforcing steel and embedded metal shall be free from dirt, oil, mill scale, loose rust, paint or other material which would tend to reduce the bond.

B. Unless otherwise indicated, a moisture barrier shall be used under all slabs placed on the ground in accordance with ACI 302.1R. The moisture barrier shall be fungi-resistant and shall have a vapor permeance rating not exceeding 0.01 perms per ASTM F1249 or ASTM E96) and 10 mils thickness (49 lbs/MSF). The moisture barrier shall be a high-

performance underslab vapor retarder made from polyethylene resins that exceed ASTM E1745, Class A. Sheets shall be lapped 6-inches at joints and sealed with 2-inch wide tape or as recommended by the manufacturer. The vapor barrier should have all laps, seams, penetrations and terminations sealed and should carry across footings.

C. When no moisture barrier is used, the earth, concrete, masonry, or other water-permeable material against which concrete is to be placed shall be thoroughly saturated with water immediately before concrete is placed. No concrete shall be placed until the consolidation of the ground and the arrangement and details of forms and reinforcing have been inspected and approved by the Engineer.

D. When joining fresh concrete to concrete which has attained full set, the latter shall be cleaned by chipping and washing off all dirt and scum and laitance. It then shall be moistened prior to placing new concrete.

E. Concrete surfaces that act as a seat for structural members (other than those resting on grout) shall be troweled to an extremely flat and level surface. If necessary, such surfaces shall be ground off to achieve the required flatness and level.

F. Fill concrete on top of concrete shall be placed in the locations indicated on the drawings or designated by the Engineer. Before fill concrete is placed, the following procedures shall be used to prepare surfaces; all dirt, scum and laitance shall be removed by chipping and washing. The clean, roughened base surface shall be saturated with water, but shall have no free water on the surface. A coat of 1:2 cement-sand grout, approximately 1/8-inch thick, shall be well scrubbed into the thoroughly dampened concrete base. The concrete fill shall be placed immediately, before the grout has dried or set. Fill concrete shall be brought to the lines and grades shown on the drawings or approved by the Engineer.

G. Concrete for thrust and anchor blocks shall be placed against undisturbed earth and wooden side forms shall be used to provide satisfactory lines and dimensions. Felt roofing paper shall be placed to protect joints. No concrete shall be placed so as to cover joints, bolts or nuts, or to interfere with the removal of the joints. Minimum bearing areas and dimensions shall be as shown on the drawings.

3.03 MIXING:

A. Concrete shall be ready-mixed, or transit-mixed, as produced by equipment acceptable to the Engineer. No hand-mixing will be permitted. Adding water in controlled amounts during the mixing cycle shall be done only with the express approval of, and in the presence of the Engineer.

B. Ready-mix or transit-mixed concrete shall be transported to the site in watertight agitator or mixer trucks loaded not in excess of rated capacities for the respective conditions as stated on the nameplate. Discharge at the site shall be within 1-1/2 hours after cement was first introduced into the mix. Central mixed concrete shall be plant-mixed a minimum of 1-1/2 minutes per batch and then shall be truck-mixed or agitated a minimum

of 8 minutes. Agitation shall begin immediately after the pre-mixed concrete is placed in the truck and shall continue without interruption until discharge. Transit-mixed concrete shall be mixed at mixing speed for at least 10 minutes immediately after charging the truck, followed by agitation without interruption until discharged.

C. All central plant and rolling stock equipment and methods shall conform to the latest Truck Mixer and Agitator Standards of the Truck Mixer Manufacturers' Bureau of the National Ready-Mixed Concrete Association, as well as ACI 304 and ASTM C94.

D. Attention is called to the importance of dispatching trucks from the batching plant so that they shall arrive at the site of the work just before the concrete is required, thus avoiding excessive mixing of concrete while waiting or delays in placing successive layers of concrete in the forms.

3.04 INSTALLATION/APPLICATION/ERECTION:

A. Placing

1. No concrete shall be placed by pumping methods without the prior written approval of the Engineer. Should the Contractor be allowed to place concrete by pumping methods, procedures, mix design of concrete, and all other precautions shall be in accordance with ACI 304.2R and as approved by the Engineer.

2. Concrete shall be placed in alternate areas, as defined by the construction and control joints indicated on the design drawings. A minimum of 3 days shall elapse between placement of adjacent sections.

3. Segregation of the concrete shall be prevented during handling; should any segregation occur, the concrete shall be remixed before it is placed. Concrete shall be placed in the forms in horizontal layers not over l to 2 feet thick. Concrete shall not be allowed to drop freely more than 4 feet. If the free drop to the point of placement must exceed 4 feet, the Contractor shall obtain the approval of the Engineer for the proposed method of depositing the concrete. The concrete shall not be required to flow over distances greater than 3 feet in any direction in the forms or on the ground, unless otherwise permitted by the Engineer.

4. Unless otherwise noted, the work begun on any day shall be completed in daylight of the same day.

5. "Cold Joints" are to be avoided, but if they occur, they are to be treated as bonded construction joints.

6. Chutes for conveying concrete shall be of U-shaped design and sized to insure a continuous flow of concrete. Flat (coal) chutes shall not be employed. Chutes shall be metal or metal-lined, and each section shall have approximately the same slope. The slope shall not be less than 25 nor more than 45 degrees and shall be such as to prevent segregation of the ingredients. The discharge end of the chute shall be

provided with a baffle plate or spout to prevent segregation. If the discharge end of the chute is more than 5 feet above the surface of the concrete in the forms, a spout shall be used, and the lower end maintained as near the surface of deposit as practicable. When the operation is intermittent, the chute shall discharge into a hopper. Chutes shall be thoroughly cleaned before and after each run, and the debris and any water shall be discharged outside the forms. Concrete shall not be allowed to flow horizontally more than 5 feet.

7. Concrete during and immediately after depositing shall be thoroughly compacted by means of suitable tools. Internal type mechanical vibrators shall be employed to produce the required quality of finish. Vibration shall be done by experienced operators under close supervision and shall be carried on long enough to produce homogeneity and optimum consolidation without permitting segregation of the solid constituents or "pumping" or migration of air. All vibrators shall be supplemented by proper wooden spade puddling adjacent to forms to remove included bubbles and honeycomb. This is essential for the top lifts of walls. All vibrators shall travel at least 10,000 rpm and be of adequate capacity. At least one vibrator shall be used for every 10 cubic yards of concrete per hour. In addition, one spare vibrator in operating condition shall be on the site.

8. Concrete slabs on the ground shall be well-tamped into place and foundation material shall be wet, tamped, and rolled until thoroughly compacted prior to placing concrete.

9. Concrete shall be deposited continuously in layers of such thickness that no concrete will be deposited on concrete that has hardened sufficiently to cause the formation of seams and planes of weakness within the section. If a section cannot be placed continuously, construction joints may be located at points as provided for in the drawings or approved by the Engineer.

10. Chutes, hoppers, spouts, adjacent work, etc., shall be thoroughly cleaned before and after each run, and the water and debris shall not be discharged inside the form.

B. Concrete Placing During Cold Weather

1. Concrete shall not be placed on frozen ground, and no frozen material or material containing ice shall be used. Materials for concrete shall be heated when concrete is mixed, placed, or cured when the mean daily temperature is below 40°F, or is expected to fall to below 40°F, within 72 hours, and the concrete after placing shall

be protected by covering, heat, or both. No accelerant shall be used to prevent freezing.

2. The temperature of concrete surfaces shall not be permitted to drop below 50ºF. for at least 7 days after placement of the concrete.

3. All details of the Contractor's handling and protecting of concrete during freezing weather shall be subject to the approval and direction of the Engineer. All procedures shall be in accordance with the provisions of ACI 306.

C. Concrete Placing During Hot Weather

1. Concrete just placed shall be protected from the direct rays of the sun and the forms and reinforcement just prior to placing shall be sprinkled with cold water. The Contractor shall make every effort to minimize delays that will result in excessive mixing of the concrete after arrival on the job.

2. During periods of excessively hot weather (90°F, or above) ingredients in the concrete shall be cooled insofar as possible and cold mixing water shall be used to maintain the temperature of the concrete at permissible levels all in accordance with the provisions of ACI 305. Any concrete with a temperature above 90°F, when ready for placement will not be acceptable, and will be rejected.

3. Temperature records shall be maintained throughout the period of hot weather giving air temperature, general weather conditions (calm, windy, clear, cloudy, etc.) and relative humidity. The record shall include checks on temperature of concrete as delivered and after placing in forms. Data should be correlated with the progress

of the work so that conditions surrounding the construction of any part of the structure can be ascertained.

D. Pipes And Embedded Metals

1. Special care shall be taken to bring the concrete into solid contact with pipes and iron work embedded in the walls and floors, particularly underneath and around all pipes where a head of water exists, making watertight joints.

2. In general, such embedded items are not shown on the structural design drawings. Design drawings of the other trades shall be consulted for their location and details.

3. Anchor bolt location, size and details shall be verified with the equipment manufacturer's certified drawings before installation.

4. Anchor bolts, reglets, sleeves, edge angles and similar embedded items will be provided, delivered to the site under other Sections of the specification, for installation under this Section.

5. Where edge angles, etc., have nuts welded on to receive machine screws, the threads of the nuts shall be protected from concrete, and the concrete shall be excluded from the space to be occupied by the screw, by the use of wood plugs or other effective means.

6. Inserts required for hanging mechanical and electrical items shall be provided and installed in the forms under the mechanical and electrical sections of the specification.

7. Should the Contractor be allowed to leave openings in the concrete for pipes or ironwork, to await the arrival of items that would delay the prosecution of the work, the openings shall be subject to the approval of the Engineer. Appropriate construction joints shall be provided. In filling any such openings with concrete, a mixture of l: l-l/2 : 3 shall be used and a watertight bond shall be secured between the old and new concrete.

8. In bolting miscellaneous items to concrete after the concrete has set, expansion bolts of an approved pattern and type shall be used. The Contractor shall submit to

the Engineer, for approval, the types of expansion bolts. Expansion bolts shall not be used until they are approved.

E. Curing

1. Concrete curing shall be performed as specified in ACI 30l and as stated herein. All curing procedures shall have prior approval of the Engineer.

2. Concrete Floors

Concrete floors which are to receive paint, concrete fill, mortar setting beds, grout fill, or any other subsequent finish shall be cured by one of the following procedures immediately after completion of placement and finishing:

a. Ponding or continuous sprinkling.

b. Application of absorptive mats or fabric kept continuously wet.

c. Application of sand kept continuously wet.

d. Application of waterproof sheet materials conforming to ASTM Cl7l.

e. Application of curing compounds conforming to ASTM C309, if it can be demonstrated to the Engineer's satisfaction that the compound is applicable and that it will not prevent bonding of the subsequent finish to be received.

Compound shall be placed at a rate of 200 square feet per gallon, in two applications perpendicular to each other.

3. Curing procedure shall be continued for at least 7 days.

   a. Moisture loss from surface placed against metal or wood forms shall be minimized by keeping forms wet until removal.

   b. Curing shall be continued for at least 7 days. When forms are removed during the curing period, surfaces shall be cured by spraying or by the use of a curing compound as previously specified.

   c. Surfaces shall be protected from traffic or damage until surfaces have hardened sufficiently. If necessary, 1/2-inch thick plywood sheets shall be used to protect the exposed surface.

F. Bracing And Supports

1. All concrete members shall be adequately and safely supported and braced until the permanent supports and braces are installed.

2. Backfilling against exterior walls shall not be done until supporting slabs are in place and have attained 70 percent of design strength, otherwise walls shall be braced against earth lateral pressure, using a system approved by the Engineer.

3. Backfilling against retaining walls shall not commence until the wall concrete has reached its 28-day strength.

G. Removing Forms and Supports

1. Removal of forms shall take place in accordance with ACI 347, Section 3.6. Except as otherwise specifically authorized by the Engineer, forms shall not be removed until the concrete has aged for the following number of day-degrees or attained 50 percent strength. (Day-degrees equals the total number of days times the average

daily air temperature at the surface of concrete. For example, 5 days at a daily average temperature of 60°F. equals 300 day-degrees.)

Location	Day-Degrees
Beams and Slabs	500
Walls and Vertical Surfaces	200

2. Shores under beams and slabs shall not be removed until the concrete has attained at least 70 percent of the specified cylinder strength and also sufficient strength to support safely its own weight and the construction loads upon it.

H. Patching

1. Defective concrete and honeycombed areas as determined by the Engineer shall be chipped down reasonably square and at least one-inch deep to sound concrete by means of hand chisels or pneumatic chipping hammers. Irregular voids or surface stones need not be removed if they are sound, free of laitance, and firmly imbedded in the parent concrete, subject to Engineer's final inspection. If honeycomb exists around reinforcement, chip to provide a clear space at least 1-inch wide all around the steel. For areas less than 1-1/2 inches deep, the patch may be made following the procedure for filling form tie holes, described in the subsection below, using adequately dry (non-trowelable) mixtures to avoid sagging. Thicker repairs will require build-up in 1-inch layers on successive days. Unless otherwise indicated, thicker repairs shall be made with Vertipatch mortar mixture blended with Acryl-Set, both by Master Builders, Inc., Cleveland, Ohio, or approved equal.

2. For concrete areas exposed to serious abrasion and/or impact forces, the Engineer may order the use of grout with a non-shrink metallic aggregate (Embeco by Master Builders, Inc.; Ironite by Fox Industries, Madison, IL; or approved equal) as an additive in the proportions listed below:

	Small Patches		Large Formed Patches	
Material	Volumes	Weights	Volumes	Weights
Cement	1.0	1.0	1.0	1.0
Metal Aggregate	0.15	0.25	0.2	0.33
Sand	1.5	1.5	1.5	1.0
Pea Gravel	--	--	1.5	1.5

I. Finishing Of Formed Surfaces

1. All concrete that is to be left exposed to view shall be scraped to remove projecting imperfections left by voids in the forms.

2. In addition to scraping, exterior exposed concrete shall be covered with a cement-base plaster mix. The mix shall consist of Thoroseal Plastic Mix and Acryl

60, as manufactured by Standard Drywall Products, Miami, FL, or approved equal. It shall be mixed and applied in accordance with the manufacturer's recommendations.

3. In addition to scraping, interior concrete surfaces which will be exposed to view and concrete surfaces which are to be prepared and painted as specified in Section 09 90 00, PAINTING, shall receive a smooth rubbed finish, in accordance with ACI 301 and as described below.

4. To permit satisfactory finishing, forms shall be removed from the vertical faces of the concrete as early as is possible without damaging the surface. Immediately after stripping forms, any fins or projections left by the forms shall be chipped off, and the surfaces rubbed smooth.

5. Form tie holes and other voids and faults shall be patched. Voids shall be cleaned out, roughened, thoroughly wetted, coated with neat cement paste, and filled with mortar of cement and sand in the same proportions, materials, and color as used in the concrete. The surface of the patch shall be flush with the surrounding surface after finishing operations are complete. Surface shall be kept continuously damp until patches are firm enough to be rubbed without damage.

6. Rubbing shall be performed while the surface is wet using a carborundum or cement sand brick, to achieve a smooth uniform, even textured finish. Patched and chipped areas shall be blended to match as closely as possible the appearance of the rest of the surface. No cement wash or plastering will be permitted, and no mortar shall be used except as required above.

7. Where finishing is performed before the end of the curing period, concrete shall under no circumstances be permitted to dry out and shall be kept continuously moist from time of placing until end of curing period, or until curing membrane is applied.

J. Concrete Floor Finishing Requirements

Unless designated otherwise, concrete floors shall have a troweled finish as specified in Section ll.7 of ACI 30l. Troweled finishes shall conform to the requirements of "Class A Tolerances," Section ll.9 as specified in ACI 30l.

K. Monolithic Floor Finish

1. Monolithic floor finish shall be applied to areas designated on the drawings.

2. A curing compound, of a type and color as recommended by the manufacturer, shall be applied to the surface to receive the monolithic floor finish.

3. Metallic aggregate hardener for monolithic floor finish shall be "Durpolate" manufactured by Castle Chemical Corp., "Proplate" manufactured by Protex

Industries, Inc., "Hydroment" manufactured by USM Corporation, or approved equal. The aggregate shall include an inorganic pigment with color to be selected by the Engineer.

4. The dry shake shall be applied with not less than 80 pounds per l00 square feet, proportioned and installed in accordance with the recommendations of the manufacturer. The dry shake shall be distributed uniformly over the surface of freshly floated concrete, floated in, troweled over and cured in the normal manner.

5. All areas with a monolithic finish shall be completely protected during construction with a plywood cover.

L. Testing

1. The Contractor shall provide all field testing and inspection services and shall pay for all such services. The Engineer shall approve the testing laboratory and shall inform the Contractor when samples are to be taken for testing. The Contractor shall forward all test results to the Engineer as soon as they are available.

2. Grout cube samples shall be taken and tested per ASTM C 109 to determine the compressive strength.

M. Failure To Meet Requirements

1. The Engineer shall have the right to reject concrete and/or grout represented by low strength tests or to agree to further testing of the concrete and/or grout. Rejected concrete and/or grout shall be promptly removed and replaced with concrete and/or grout conforming to the specification. The decision of the Engineer as to whether substandard concrete and/or grout is to be accepted or rejected or additional tests shall be conducted shall be final. All direct and indirect costs associated with further curing and testing of the concrete shall be at the Contractor's expense. All costs associated with removing rejected concrete and/or grout, placing new concrete and/or grout, and conducting tests on new concrete and/or grout shall be at the Contractor’s expense.

END OF SECTION

SECTION 05 50 00

METAL FABRICATIONS

PART 1 - GENERAL

1.01 RELATED DOCUMENTS

A. Drawings and general provisions of the Contract, including General and Supplementary Conditions and Division 01 Specification Sections, apply to this Section.

1.02 SUMMARY

A. Section Includes:

1. Metal ladders.
2. Ladder safety cages.

1.03 COORDINATION

A. Coordinate selection of shop primers with topcoats to be applied over them. Comply with paint and coating manufacturers' written instructions to ensure that shop primers and topcoats are compatible with one another.

B. Coordinate installation of metal fabrications that are anchored to or that receive other work. Furnish setting drawings, templates, and directions for installing anchorages, including sleeves, concrete inserts, anchor bolts, and items with integral anchors, that are to be embedded in concrete or masonry. Deliver such items to Project site in time for installation.

1.04 ACTION SUBMITTALS

A. Product Data: For the following:

1. Manufactured metal ladders.
2. Ladder safety cages.

B. Shop Drawings: Show fabrication and installation details. Include plans, elevations, sections, and details of metal fabrications and their connections. Show anchorage and accessory items. Provide Shop Drawings for the following:

1. Metal ladders.
2. Ladder safety cages.

C. Delegated-Design Submittal: For ladders including analysis data signed and sealed by the qualified professional engineer responsible for their preparation.

1.05 INFORMATIONAL SUBMITTALS

A. Qualification Data: For professional engineer's experience with providing delegated-design engineering services of the kind indicated, including documentation that engineer is licensed in the jurisdiction in which Project is located.

B. Mill Certificates: Signed by stainless steel manufacturers, certifying that products furnished comply with requirements.

C. Welding certificates.

D. Paint Compatibility Certificates: From manufacturers of topcoats applied over shop primers, certifying that shop primers are compatible with topcoats.

E. Research Reports: For post-installed anchors.

1.06 QUALITY ASSURANCE

A. Welding Qualifications: Qualify procedures and personnel in accordance with the following:

1. AWS D1.1/D1.1M, "Structural Welding Code - Steel."
2. AWS D1.2/D1.2M, "Structural Welding Code - Aluminum."
3. AWS D1.6/D1.6M, "Structural Welding Code - Stainless Steel."

1.07 FIELD CONDITIONS

A. Field Measurements: Verify actual locations of walls, floor slabs, decks, and other construction contiguous with metal fabrications by field measurements before fabrication.

PART 2 - PRODUCTS

2.01 PERFORMANCE REQUIREMENTS

A. Delegated Design: Engage a qualified professional engineer to design ladders

B. Structural Performance of Aluminum Ladders: Ladders, shall withstand the effects of loads and stresses within limits and under conditions specified in ANSI A14.3.

2.02 METALS

A. Metal Surfaces, General: Provide materials with smooth, flat surfaces unless otherwise indicated. For metal fabrications exposed to view in the completed Work, provide materials without seam marks, roller marks, rolled trade names, or blemishes.

B. Aluminum Plate and Sheet: ASTM B209, Alloy 6061-T6.

C. Aluminum Extrusions: ASTM B221, Alloy 6063-T6.

D. Aluminum-Alloy Rolled Tread Plate: ASTM B632/B632M, Alloy 6061-T6.

E. Aluminum Castings: ASTM B26/B26M, Alloy 443.0-F.

2.03 FASTENERS

A. General: Unless otherwise indicated, provide Type 316 stainless steel fasteners for exterior use and zinc-plated fasteners with coating complying with ASTM B633 or ASTM F1941/F1941M, Class Fe/Zn 5, at exterior walls. Select fasteners for type, grade, and class required.

1. Provide stainless steel fasteners for fastening aluminum

B. Steel Bolts and Nuts: Regular hexagon-head bolts, ASTM A307, Grade A; with hex nuts, ASTM A563; and, where indicated, flat washers.

C. High-Strength Bolts, Nuts, and Washers: ASTM F3125/F3125M, Grade A325, Type 3, heavy-hex steel structural bolts; ASTM A563, Grade DH3, heavy-hex carbon-steel nuts; and where indicated, flat washers.

D. Stainless Steel Bolts and Nuts: Regular hexagon-head annealed stainless steel bolts, ASTM F593; with hex nuts, ASTM F594; and, where indicated, flat washers; Alloy Group 1

E. Anchor Bolts: ASTM F1554, Grade 36, of dimensions indicated; with nuts, ASTM A563; and, where indicated, flat washers.

1. Hot-dip galvanize or provide mechanically deposited, zinc coating where item being fastened is indicated to be galvanized.

F. Anchors, General: Capable of sustaining, without failure, a load equal to six times the load imposed when installed in unit masonry and four times the load imposed when installed in concrete, as determined by testing in accordance with ASTM E488/E488M, conducted by a qualified independent testing agency.

G. Cast-in-Place Anchors in Concrete: Either threaded or wedge type unless otherwise indicated; galvanized ferrous castings, either ASTM A47/A47M malleable iron or ASTM A27/A27M cast steel. Provide bolts, washers, and shims as needed, all hot-dip galvanized per ASTM F2329/F2329M.

H. Post-Installed Anchors: Torque-controlled expansion anchors or chemical anchors.

1. Material for Interior Locations: Carbon-steel components zinc plated to comply with ASTM B633 or ASTM F1941/F1941M, Class Fe/Zn 5, unless otherwise indicated.
2. Material for Exterior Locations and Where Stainless Steel Is Indicated: Alloy Group 1 stainless steel bolts, ASTM F593, and nuts, ASTM F594.

I. Slotted-Channel Inserts: Cold-formed, hot-dip galvanized-steel box channels (struts) complying with MFMA-4, 1-5/8 by 7/8 inches by length indicated with anchor straps or studs not less than 3 inches long at not more than 8 inches o.c. Provide with temporary filler and tee-head bolts, complete with washers and nuts, all zinc-plated to comply with ASTM B633, Class Fe/Zn 5, as needed for fastening to inserts.

2.04 MISCELLANEOUS MATERIALS

A. Bituminous Paint: Cold-applied asphalt emulsion complying with ASTM D1187/D1187M.

B. Shrinkage-Resistant Grout: Factory-packaged, nonmetallic, nonstaining, noncorrosive, nongaseous grout complying with ASTM C1107/C1107M. Provide grout specifically recommended by manufacturer for interior and exterior applications.

2.05 FABRICATION, GENERAL

A. Shop Assembly: Preassemble items in the shop to greatest extent possible. Disassemble units only as necessary for shipping and handling limitations. Use connections that maintain structural value of joined pieces. Clearly mark units for reassembly and coordinated installation.

B. Cut, drill, and punch metals cleanly and accurately. Remove burrs and ease edges to a radius of approximately 1/32 inch unless otherwise indicated. Remove sharp or rough areas on exposed surfaces.

C. Form bent-metal corners to smallest radius possible without causing grain separation or otherwise impairing work.

D. Form exposed work with accurate angles and surfaces and straight edges.

E. Weld corners and seams continuously to comply with the following:

1. Use materials and methods that minimize distortion and develop strength and corrosion resistance of base metals.
2. Obtain fusion without undercut or overlap.
3. Remove welding flux immediately.
4. At exposed connections, finish exposed welds and surfaces smooth and blended so no roughness shows after finishing and contour of welded surface matches that of adjacent surface.

F. Form exposed connections with hairline joints, flush and smooth, using concealed fasteners or welds where possible. Where exposed fasteners are required, use Phillips flat-head (countersunk) fasteners unless otherwise indicated. Locate joints where least conspicuous.

G. Fabricate seams and other connections that are exposed to weather in a manner to exclude water. Provide weep holes where water may accumulate.

H. Cut, reinforce, drill, and tap metal fabrications as indicated to receive finish hardware, screws, and similar items.

I. Provide for anchorage of type indicated; coordinate with supporting structure. Space anchoring devices to secure metal fabrications rigidly in place and to support indicated loads.

J. Where units are indicated to be cast into concrete or built into masonry, equip with integrally welded steel strap anchors, 1/8 by 1-1/2 inches, with a minimum 6-inch embedment and 2-inch hook, not less than 8 inches from ends and corners of units and 24 inches o.c., unless otherwise indicated.

2.06 MISCELLANEOUS FRAMING AND SUPPORTS

A. General: Provide steel framing and supports not specified in other Sections as needed to complete the Work.

B. Fabricate units from steel shapes, plates, and bars of welded construction unless otherwise indicated. Fabricate to sizes, shapes, and profiles indicated and as necessary to receive adjacent construction.

1. Fabricate units from slotted channel framing where indicated.

2.07 METAL LADDERS

A. General:

1. Comply with ANSI A14.3

B. Aluminum Ladders:

1. Manufacturers: Subject to compliance with requirements, available manufacturers offering products that may be incorporated into the Work include, but are not limited to, the following:

   a. Halliday Products.
   b. O'Keeffe's Inc.
   c. Precision Ladders, LLC.

2. Source Limitations: Obtain aluminum ladders from single source from single manufacturer.
3. Space siderails 18 inches apart unless otherwise indicated.
4. Siderails: Continuous extruded-aluminum channels or tubes, not less than 2-1/2 inches deep, 3/4 inch wide, and 1/8 inch thick.
5. Rungs: Extruded-aluminum tubes, not less than 3/4 inch deep and not less than 1/8 inch thick, with ribbed tread surfaces.
6. Fit rungs in centerline of siderails; fasten by welding or with stainless steel fasteners or brackets and aluminum rivets.
7. Provide platforms as indicated fabricated from pressure-locked aluminum bar grating or extruded-aluminum plank grating, supported by extruded-aluminum framing. Limit openings in gratings to no more than 1/2 inch in least dimension.
8. Support each ladder at top and bottom and not more than 60 inches o.c. with welded or bolted aluminum brackets.

2.08 LADDER SAFETY CAGES

A. General:

1. Fabricate ladder safety cages to comply with ANSI A14.3. Assemble by welding or with stainless steel fasteners.
2. Provide primary hoops at tops and bottoms of cages and spaced not more than 20 feet o.c. Provide secondary intermediate hoops spaced not more than 48 inches o.c. between primary hoops.
3. Fasten assembled safety cage to ladder rails and adjacent construction by welding or with stainless steel fasteners unless otherwise indicated.

B. Aluminum Ladder Safety Cages:

1. Primary Hoops: 1/4-by-4-inch flat bar hoops.
2. Secondary Intermediate Hoops: 1/4-by-2-inch flat bar hoops.
3. Vertical Bars: 1/4-by-2-inch flat bars secured to each hoop.

2.09 STEEL WELD PLATES AND ANGLES

A. Provide steel weld plates and angles not specified in other Sections, for items supported from concrete construction as needed to complete the Work. Provide each unit with no fewer than two integrally welded steel strap anchors for embedding in concrete.

2.010 GENERAL FINISH REQUIREMENTS

A. Finish metal fabrications after assembly.

B. Finish exposed surfaces to remove tool and die marks and stretch lines, and to blend into surrounding surface.

2.011 ALUMINUM FINISHES

A. As-Fabricated Finish: AA-M12.

B. Clear Anodic Finish: AAMA 611, Class I, AA-M12C22A41.

PART 3 - EXECUTION

3.01 INSTALLATION, GENERAL

A. Cutting, Fitting, and Placement: Perform cutting, drilling, and fitting required for installing metal fabrications. Set metal fabrications accurately in location, alignment, and elevation; with edges and surfaces level, plumb, true, and free of rack; and measured from established lines and levels.

B. Fit exposed connections accurately together to form hairline joints. Weld connections that are not to be left as exposed joints but cannot be shop welded because of shipping size limitations. Do not weld, cut, or abrade surfaces of exterior units that have been hot-dip galvanized after fabrication and are for bolted or screwed field connections.

C. Field Welding: Comply with the following requirements:

1. Use materials and methods that minimize distortion and develop strength and corrosion resistance of base metals.
2. Obtain fusion without undercut or overlap.
3. Remove welding flux immediately.
4. At exposed connections, finish exposed welds and surfaces smooth and blended so no roughness shows after finishing and contour of welded surface matches that of adjacent surface.

D. Fastening to In-Place Construction: Provide anchorage devices and fasteners where metal fabrications are required to be fastened to in-place construction. Provide threaded fasteners for use with concrete and masonry inserts, toggle bolts, through bolts, lag screws, wood screws, and other connectors.

E. Provide temporary bracing or anchors in formwork for items that are to be built into concrete, masonry, or similar construction.

F. Corrosion Protection: Coat concealed surfaces of aluminum that come into contact with grout, concrete, masonry, wood, or dissimilar metals with the following:

1. Cast Aluminum: Heavy coat of bituminous paint.
2. Extruded Aluminum: Two coats of clear lacquer.

3.02 INSTALLATION OF MISCELLANEOUS FRAMING AND SUPPORTS

A. General: Install framing and supports to comply with requirements of items being supported, including manufacturers' written instructions and requirements indicated on Shop Drawings.

END OF SECTION 05 50 00

SECTION 05 51 36.19

ENGINEERED EXTRUDED ALUMINUM COVERS

PART 1 - GENERAL

1.01 DESCRIPTION

A. This specification is for a fully engineered, substantially airtight, aluminum cover structure comprised of panels, and beams or trusses. This specification shall be regarded as a minimum standard for design and fabrication.

B. Scope of Work: Furnish all labor, materials, and equipment to provide a complete system of fixed and removable, custom fit, flat aluminum covers. The Tank Cover system includes cover panels, structural supports, and attaching hardware.

C. Tank cover shall be fully supported solely using the existing concrete walls for the tank structure. The tank has internal dimensions of 60 ft in diameter. The cover shall be installed above the proposed water surface elevation of the tank, with the lowest component of the cover system at 3 ft. above the proposed water surface elevation.

D. Tank cover shall not interfere with the proposed walkway bridge by the gravity thickener mechanism manufacturer. Accommodations shall be made during the design of the cover to locate the cover underneath the proposed walkway bridge.

E. Tank cover shall have hinged or removable and lockable access doors along the entire circumference of the tank in order to allow access to the effluent weirs for cleaning.

F. Tank cover shall be equipped with four (4) 48”x48” hinged access doors (one in each quadrant) at approximately half the tank radius for maintenance access.

G. Tank cover shall be able to accommodate all loads as specified herein.

H. Contractor will have access to the proposed mechanism shop drawing as soon as it is available to provide to Cover manufacturer for coordination on center column dimensions, bridge dimensions, elevations, etc.

1.02 ENGINEERING

A. A submittal shall be provided to the engineer prior to the beginning of fabrication. The submittal shall include:

1. Complete structural calculations showing the governing stresses in all members and connections, and detailed shop drawings. Cover manufacturer’s PE shall stamp

preliminary drawings. Final Drawings and calculations shall bear the stamp of local state PE if required.

2. Manufacturer's standard guarantee.

1.03 QUALIFICATIONS

A. Manufacturer: Shall be a company specialized in providing engineered aluminum covers for wastewater treatment tanks/troughs for at least ten (10) years. When requested by the Engineer, submit written evidence to show experience qualifications and adequacy of plant capability and facilities for performance of contract requirements.

B. Erector: Regularly engaged for at least five (5) years in the erection of aluminum covers for wastewater treatment tanks.

C. Welders: Qualified within the past two (2) years in accordance with AWS.

1.04 PERFORMANCE

A. Span: The clear span length of the cover shall be as noted in the scope of work.

B. Width: The inside width of the cover shall be as noted in the scope of work.

C. Distributed Design Live Load and Deflection: All structural components shall be designed to support the dead weight of the structure, plus a live load of 50 pounds per square foot of surface. The maximum deflection of any component under this load shall not exceed L/240 of the span of that component. In no event shall the dead load deflection exceed the rise of any component in order to avoid surface ponding.

D. Concentrated Live Load: The structural components shall be designed to support a 400-pound load on a 12” x 12” area located anywhere on the surface of the structure without permanently deforming the tested area.

E. Design Stresses: All allowable design stresses in structural aluminum shall be in accordance with the “Specifications for Aluminum Structures” for building-type structures by the Aluminum Association.

F. Skid Resistance: The cover shall possess an integral non-skid surface and no exposed area of cover system wider than one inch shall be without ribs/non-skid surface. The aluminum-decking surface of the structure shall be RPS Engineering’s extruded Aluminum planks that are ribbed and cross-serrated to provide an aggressive non-skid surface. This surface shall not be achieved by the use of paint, adhesive tapes or sandblastings.

G. Chemical Resistance: Panels shall be fabricated entirely of 6061-T6 corrosion resistant

aluminum extrusions. Every panel to beam connection shall be chemical resistant and will not weaken or corrode and will interlock. A mechanical and replaceable Santoprene seal shall isolate the cover perimeter from the concrete wall. No foam tape or caulk shall be allowed.

H. Configuration: The aluminum cover shall be composed of panels and beams or trusses. Cover may be bridge supported if structure is of sufficient strength. All panels shall interlock with the adjoining beams, bridge or truss without the use of threaded fasteners. The weight of an individual panel shall not exceed 150 pounds. Each removable panel shall be easy to remove and the lifting force required shall not exceed the dead weight of the panel.

I. Drainage: The cover shall be able to self-drain rain water that should accumulate on top of the panels. This could include weeping ports built into the frame to allow water to pass through.

1.05 DELIVERY AND INSTALLATION

A. Delivery: Delivery of the components of the structure shall be made to a location nearest the site that is accessible to over the road trucks, unless otherwise specified.

B. Storage: The manufacturer shall be responsible for jobsite storage of the delivered components. The components shall be stored off the ground on level surface in such a manner as to prevent damage.

C. Contractor Installation: The cover manufacturer can provide installation instructions, on-site supervision, and inspection if desired. The determination of these services being required is at sole discretion of the Contractor and shall be included in the Contractor's scope if desired.

D. OEM Manual: The manufacturer shall provide an OEM Manual that includes "as built" drawings, maintenance instructions, and removal and replacement instructions for the installed cover.

1.06 WARRANTY

A. The equipment shall be warranted by the manufacturer for a period of two (2) years from the date of shipment or one (1) year from the date of final installation, whatever is sooner. Any and all defects from the supply of the materials shall be addressed and replaced at the cost of the manufacturer who supplied the materials.

PART 2 – PRODUCTS

2.01 MANUFACTURER

A. Acceptable manufacturers are as follows:

a. RPS Engineering, 1300 Crispin Dr, Elgin, IL 60123, 847-931-1950
b. CST Industries, 903 East 104th St Suite 900, Kansas City, MO, 913-621-3700
c. Hallsten, 6944 34th St, North Highlands, CA, 800-473-7440
d. No equals.

2.02 MATERIALS

A. Aluminum: All aluminum used in the fabrication of the cover shall be alloy 6061-T6. All plate shall be alloy 6061-T6. Material shall be new and first quality.

B. Welding Electrodes: Welding shall be with electrodes of an alloy, which shall produce welds with strength and corrosion resistant characteristics compatible to the base metal.

C. Fasteners: All fasteners between aluminum components shall be stainless steel or structural plastic. Aluminum shall be isolated from dissimilar materials by means of a stainless steel spacer or an elastomeric isolator. All panels and beams shall be joined with quickly removable interlocking plastic pins, which shall be removable without the use of tools. Beams and panels shall be fastened to concrete using stainless steel drill in place anchor bolts.

D. Steel Accessories: No carbon steel components shall be used.

E. Seals: A mechanical and replaceable Santoprene seal shall isolate the cover perimeter from the concrete wall. No foam tape or caulk shall be allowed.

F. Access Hatch Panels: Access to any location under the cover shall be gained through integral gear hinged access hatches or approved equal. The Access Hatch Panels shall have the identical properties as the rest of the aluminum cover including loads, deflection and slip resistance specifications. The access-hinged panels shall be the full panel width. The length of the access panel shall be clearly indicated on drawings. Hinged panel components including hinges, decking and lifting handles shall be extruded 6061-T6. While in the closed position the hatches will be completely flush therefore posing no tripping hazard. In the open position the panel shall lie flat on the cover and will not need a hold open device. Access hatch panels shall be provided along the entire circumference of the cover for access to the weirs below. Four (4) 48”x48” access hatches shall also be provided, one in each quadrant of the tank, located at approximately half the radius of the tank.

G. Drainage: Cover shall include drainage ports or a different means of passing rain water through the cover into the tank below. Any openings in the cover must not be larger than ½” diameter or a ¼” continuous gap.

H. Handles: Shall be in integral flush mounted aluminum and incorporated into the non-skid deck slat.

PART 3 – EXECUTION

4.1 FABRICATION AND WORKMANSHIP

A. Workmanship: The quality of workmanship shall be equal to the best general practice in modern structural fabrication shops. Workmanship, fabrication, and shop connections shall be in accordance with the latest edition of ANSI/AWS D1.2 "Structural Welding Code – Aluminum".

B. Experience: The manufacturer must furnish adequate evidence of a minimum of ten (10) years of ongoing experience in the manufacture of similar structures.

C. Preparation for Welding: All components to be welded shall be free of dirt, grease and other contaminants and shall fit up properly for sound welding. Surfaces to be welded may not be cut with oxygen. Sawing, shearing, or machining may be used.

D. Welding Procedures: All welding shall be with an inert gas shield arc process. Machine settings shall be developed with test welds of the same material, alloy and geometry as the work pieces and samples will be tested destructively.

END OF SECTION

SECTION 09 90 00

PAINTING

PART 1 - GENERAL

1.01 WORK INCLUDED:

A. This Section covers field painting and coating of surfaces, complete. Shop painting of metal items is specified under the applicable item.

B. A schedule listing the various types of surfaces to be painted and the types of paints to be applied is included herein.

C. Unless otherwise indicated, the following items shall not be painted:

1. Labels on equipment, such as Underwriters' Laboratories and Factory Mutual, equipment identification, performance rating, and name or nomenclature plates.

2. Moving parts of operating units, exposed bolt threads, mechanical and electrical parts, such as valve and damper operators, linkages, sensing devices, motor and fan shafts.

3. Electrical conduit unless mounted on painted or finished surfaces or exposed in a finished room.

4. Structural steel not exposed to view, and other parts of buildings also not exposed to view.

5. Stainless steel.

6. Plumbing fixtures.

7. Fiberglass and polyethylene storage tanks.

8. Uninsulated PVC piping (to be banded only)

* 9. Factory prefinished architectural components.

* 10. Electrical panels and cabinets factory finish painted.

---

* Except for touch-up painting when required

1.02 RELATED WORK:

A. Section 33 31 13.19, DUCTILE IRON PIPE
B. Section 46 71 13.01, GRAVITY THICKENER MECHANISM SUPPLY (FOR REFERENCE)
C. Section 46 71 13.02, GRAVITY THICKENER MECHANISM INSTALLATION

1.03 SYSTEM DESCRIPTION:

A. The term "paint" as used herein includes emulsions, enamels, paints, stains, varnishes, sealers, and other coatings, organic or inorganic, whether used as prime, intermediate, or finish coats.

B. The Contractor shall do a complete painting job throughout the work in accordance with generally approved modern practices for work of high quality. Unless otherwise specified, all materials and surfaces customarily painted shall be given not less than one shop coat and two field coats or one prime coat and two finish coats, regardless of whether or not the surface to be painted is specifically mentioned.

C. Paints containing lead shall not be used.

D. To ensure a satisfactory painting job it is essential that the paints applied in the shop and in the field be mutually compatible. The Contractor shall determine what shop paints have been used and shall verify that field applied paints are compatible therewith.

E. The colors of finish coatings shall be selected by the Engineer from color chips submitted by the Contractor for review. The color selection shall be in the form of a schedule indicating the colors to be used on the various surfaces. The colors used in the final work shall be in accordance with the color schedule and shall match the selected color chips.

F. All coating systems used for potable water applications shall be previously approved by the National Sanitation Foundation (N.S.F.) in accordance with Standard 61. Evidence of such approval shall be an approval letter from N.S.F. listing the submitted materials.

G. Paints submitted shall meet all Federal and State E.P.A. regulations pertaining to volatile organic compounds (VOC) compliance.

1.04 REFERENCES:

A. The following standards form a part of these specifications, and indicate the minimum standards required:

American Society for Testing and Materials (ASTM)

ASTM F1869 Moisture Vapor Emission Rate Using Anhydrous Calcium Chloride

1.05 SUBMITTALS: IN ACCORDANCE WITH REQUIREMENTS OF SECTION 01 33 23 SUBMITTALS, SUBMIT THE FOLLOWING:

A. Manufacturer's literature of proposed paints.

B. Painting schedule.

C. Three (3) sets of color chips for selection of colors.

1.06 DELIVERY AND STORAGE:

A. Paint shall be delivered to the site in the manufacturer's sealed containers. Each container shall bear the manufacturer's label, listing the brand name, type and color of paint, and instructions for thinning. Thinning shall be done only in accordance with directions of the manufacturer. Job mixing or job tinting may be done when approved by the Engineer and for preparing sample colors.

B. Painting materials shall be stored and mixed in a single location designated by the Engineer for this purpose. The Contractor shall not use any plumbing fixture or pipe for mixing or for disposal of any refuse. It shall carry all necessary water to its mixing room, and shall dispose of all waste outside of the building in a suitable receptacle. The Contractor will be held responsible for any damage done due to failure to observe these precautions.

C. The paint storage area shall be kept clean at all times, and any damage thereto or to its surroundings shall be repaired. Any oily rags, waste, etc., shall be removed from the building every night, and every precaution shall be taken to avoid danger of fire.

D. Heat must be provided in the storage area if paints are to be stored during winter months. The temperature shall be maintained above 40 degrees F. at all times.

PART 2 - PRODUCTS

2.01 MATERIALS:

A. PAINT SCHEDULE:

Except as otherwise indicated, all paint used shall be of the type listed in the schedule below, by Tnemec Company, Inc., or equivalent paints by Sherwin-Williams Company, International Paints, or other approved paint fully equal to paint manufactured by the above-named companies. No brand other than those named will be considered for approval unless the brand and type of paint proposed for each item in the following painting schedule are submitted in writing to the Engineer, along with sufficient data supported by certified tests.

PAINT SCHEDULE

Key		Tnemec	Note 1
AGE	Acryli Gloss Enamel	1029 Enduratone	3.5
APE	Acrylic Polyurethane	73 Endura-Shield Enamel	3.0
ABF	Cementitious Block Filler	130 Envirofill	80-100 s.f./gal
BO	Bleaching Oil	Note 5	
CEE	Catalyzed Epoxy	L69F Epoxoline II	4.0
CEM	Catalyzed Epoxy Mastic	27 WB Typoxy	Note 3
CEP	Catalyzed Epoxy Primer	L69F Epoxoline	3.0
EMC	Epoxy Modified Cement	218 Mortar-Clad	Fill/Surface
EP	Epoxy-Polyamide (thinned 30% #4 thinner)	FC 22 Pota-pox	25-30
EPW	Water-based Epoxy Primer	151 Elasto-Grip	1.0-1.5
HGV	High Gloss Varnish		Note 2
HSE	High Solids Epoxy (Minimum 69%)	L69 Epoxy	6.0
MA	Modified Acrylic	115 Uni-bond	3.0
MAE	Modified Acrylic Elastomer	156 Envirocrete	6.0-8.0
MCU	Moisture Cured Urethane	Series 1 - Omnithane	2.5-3.0
MPE	Modified Polyamine Epoxy	Series 435 - Permaglaze	15-20 mils
NE	Novolac Epoxy	282 Tneme-Glaze	7.5
PEF	Polyamine Epoxy Finish	280 Tneme-Glaze	6.0-8.0
PEP	Polyamine Epoxy Primer	201 Epoxoprime	6.0-8.0
PVA	PVA Sealer	151 Elasto Grip	0.75-1.5
PWC	Potable Water Coating	Series FC 22 Pota Pox	25-30
SA	Silicone Aluminum	39-1261 (Note 4)	1.5
VB	Vapor Barrier	262 Elasto Shield	50-100
WP	Wood Primer	151 Elasto-Grip	1.0-1.5

Key		Tnemec	Note 1
WS	Wood Sealer	Note 2	-
Z	Zinc-Rich Primer	90G-1K97 Tneme-Zinc	2.5

Notes
1: Minimum Dry Film Thickness/Coat (mils)
2: Furnished by reputable manufacturer and acceptable to the Engineer.
3: Shall be used as a tie-coat between incompatible paints @ 3.0-4.0 mils.
4: This paint is suitable for temperatures up to 1200ºF and must be final cured at 400ºF for one hour.
5: Bleaching oil is a translucent gray paint stain with a chemical additive to enhance the natural bleaching tendencies of cedar shingles.

B. PAINTING SCHEDULE:

Paint shall be applied in accordance with the paint key listed on the following schedule and defined in the preceding Paint Schedule:

Item	Field Coats		
	1st	2nd	3rd
Walls:			
Interior concrete masonry units	ABF	HSE	HSE
Interior concrete designated to be painted, to include top and outside of all concrete containment curbs	HSE	HSE	--
Interior chemical containment curbs on the chemical storage side	PEP	NE	NE
Exterior concrete masonry units (if sprayed, backroll first coat)***	MAE	MAE	--
Exterior wood shingles	BO	BO	--
Plaster & gypsum wallboard	PVA	HSE	HSE
Concrete Tank Walls	MPE	MPE	
Floors:			
Concrete floors designated to be painted	PEP	PEF	PEF
Concrete floor slab in chemical containment areas including tank pads	PEP	NE	NE
Concrete floor and pads in chemical feed and fluoride rooms	PEP	NE	NE
Ceilings and Walls:			
Exposed galvanized metal deck/bar joists, dry spaces^	MA	--	--

Exposed galvanized metal deck/bar joists, wet spaces^		CEE		
Exposed galvanized wall panel		CEE	CEE	--
Plaster & gypsum wallboard		PVA	CEE	CEE
Equipment Items:				
With shop prime coat, including machinery and pumps (non-submerged)	Interior	*CEP	CEE	--
	Exterior	*CEP	APE	
(submerged)	Exterior	MPE	MPE	
With shop finish coat (when designated to be painted)	Interior	*CEM	CEE	--
	Exterior	*CEM	APE	
Submerged Factory Primed Metals (Gravity Thickener)		MPE	MPE	--
Tanks:				
Steel tanks (interior)		*MCU	CEE	CEE
Steel tanks (exterior)		*MCU	CEE	APE
Exterior of potassium permanganate (KMn04) tanks (steel only)(with CEP shop coat)		HSE	HSE	--
Interior of potassium permanganate tanks		NE	NE	
Potable Water Coatings (immersion service):				
Concrete Tanks (when designated to be brush blasted and painted)		EMC	PWC	
Steel Tanks (SSPC-SP#10 prep. required)		PWC	PWC	--
Metals:				
Exposed interior structural steel including monorails and supports		*Z	CEE	CEE
Exposed exterior structural steel including monorails and supports		*Z	CEE	APE
Interior miscellaneous galvanized and non-ferrous metals and piping		CEE	CEE	--
Exterior miscellaneous galvanized and non-ferrous metals and piping (SP7 required)		CEE	APE	--
Miscellaneous interior ferrous piping, metalwork, ferrous parts or operating devices, valve handles, levers, pumps,		CEP	CEE	--
and ferrous hangers and supports (exterior exposure)		CEP	CEE	APE
Exposed electrical conduit, conduit fittings, outlet boxes		Same as adjacent wall or ceiling		

Hot ferrous metal surface	SA	SA	--
Piping:			
PVC Piping designated to be painted (SP7 or hand sand)	CEE	CEE	--
Pipe insulation (plastic or metal sheathed paint as scheduled for plastic or metal surface)	PVA	CEE	CEE
Other piping (see metals)			

* Spot Prime

***For existing, painted masonry walls, use EPW primer, followed by two coats of MAE.

^ If galvanized metal is provided with a light top coat sealer, light brush blast surface preparation is required prior to first field coat

B. SPARE PAINT:

1. Furnish to the Owner one unopened gallon of each type and color of paint used on the work.

2. Furnish both components for each type and color of epoxy paints used on the work.

PART 3 - EXECUTION

3.01 SURFACE PREPARATION:

A. Before any surface is painted, it shall be cleaned carefully of all dust, dirt, grease, loose rust, mill scale, old/weathered paint, efflorescence, etc. All necessary special preparatory treatment shall then be applied. Where required, imperfections and holes in surfaces to be painted shall be filled in an approved manner.

B. Cleaning and painting shall be so programmed that dust and other contaminants from the cleaning process will not fall on wet, newly painted surfaces.

C. Surfaces which have been cleaned, pretreated, or otherwise prepared for painting, shall be painted with the first field coat as soon as practicable after such preparation has been completed, but in any event prior to any deterioration of the prepared surface.

D. Wood shall be sanded to a smooth and even surface and then dusted off. Before priming wood that is to be painted, shellac shall be applied to all knots, pitch and sapwood. After priming or stain coat has been applied, nail holes and cracks shall be thoroughly filled with plastic wood or putty. For natural finish work, putty shall be colored to be imperceptible in the finished work.

E. Exposed nails and other ferrous metal or surfaces to be painted with water-thinned paint

shall be spot primed with aluminum.

F. Cracks and holes in masonry and concrete surfaces to be painted shall be filled with patching material recommended by the coatings manufacturer. Surfaces shall be clean and dry before painting. All efflorescence, grease, oil, etc., shall be removed before painting, and all loose, crumbling material shall be removed by vigorous wire brushing over entire surface, followed by removal of all dust. All high areas on masonry and concrete surfaces such as mortar daubs, mortar ridges at joints, and ridges at form joints in concrete shall be removed.

G. All holes in plaster shall be filled with plaster of Paris and all cracks shall be cut out and filled. No sandpaper shall be used on plastered surfaces. Prior to painting, surfaces shall be tested with a moisture detecting device, such as Kaydel Plaster Tester, Type CP-48, as manufactured by Hard Moisture Gauges, Inc. No sealer or paint shall be applied when the moisture content of the plaster exceeds 8 percent, as determined by the test. Testing shall be done in the presence of the Engineer's representative, and in as many locations as directed. Plaster shall be thoroughly dry-brushed before painting or sealing.

H. All nonferrous metal surfaces to be painted shall be cleaned of all dirt, grease, oil and other foreign substances uniformly profiled per SSPC SP 7.

I. All galvanized surfaces to be painted shall be brush blasted to create a uniform surface profile per SSPC SP7.

J. Before application of the first full field coat, abraded areas of all non-galvanized ferrous metal items having shop coats shall be touched up with paint of the type indicated on the Painting Schedule.

K. All items of equipment such as motors, pumps, instrumentation panels, electrical switchgear, and similar items, that have been given shop coats, paint filler, enamel or other treatment customary with the manufacturer, shall have, after installation, all scratches and blemishes touch up prior to application of the first field coat. Factory prefinished items not to be field painted shall be touched up with matching paint to repair any areas damaged during installation.

L. All submerged concrete surfaces that are to receive an epoxy coating shall be brush blasted to remove surface laitance and provide a uniform surface profile, reference SSPC SP #13. Surface preparation may commence one week after the concrete has been pronounced cured. The curing period is defined as that length of time during which the concrete is fully hydrated (28 day cure). Patch holes and voids with specified modified epoxy cement prior to coating.

M. Concrete floors that are to receive epoxy coating shall be brush blasted or shot blasted per SSPC SP #13 and ICRI Surface Profile requirements per the coating manufacturer (Blastrack). Check for excessive moisture migration per ASTM F1869, Moisture Vapor Emission Rate Using Anhydrous Calcium Chloride. Test results not to exceed 3 lbs per

1,000 square feet in one 24-hour period.

N. Hardware accessories, machine surfaces, plates, lighting fixtures, and similar items in place prior to cleaning and painting, and not intended to be painted, shall be removed during painting operations and repositioned upon completion of each area or shall otherwise be protected.

O. All PVC pipe to be painted shall be brush blasted per SSPC SP7 or shall be sanded to provide a uniform surface profile.

3.02 APPLICATION:

A. Paint shall be used and applied as recommended by the manufacturer without being extended or modified, and with particular attention to the correct preparation and condition of surfaces to be painted.

B. Paint shall be applied only within the temperature range recommended by the manufacturer. Painting of surfaces when they are exposed to the sun shall be avoided.

C. Paint shall not be applied to wet or damp surfaces and shall not be applied in rain, snow, fog, or mist, or when the relative humidity exceeds 85 percent.

D. No paint shall be applied when it is expected that the relative humidity will exceed 85 percent or that the air temperature will drop below 40ºF within 18 hours after the application of paint. Dew or moisture condensation should be anticipated and if such conditions are prevalent, painting shall be delayed until midmorning to be certain that the surfaces are dry. Further, the days painting should be completed well in advance of the probable time of day when condensation will occur, in order to permit the film an appreciable drying time prior to the formation of moisture.

E. All paint shall be applied under favorable conditions by skilled painters and shall be brushed out carefully to a smooth, even coating without run or sags. Enamel shall be applied evenly and smoothly. Each coat of paint shall be allowed to dry thoroughly, not only on the surface but also throughout the thickness of the paint film before the next coat is applied. Finish surfaces shall be uniform in finish and color, and free from flash spots and brush marks. In all cases the paint film produced shall be satisfactory in all respects to the Engineer.

F. Exposed nails and other ferrous metal or surfaces to be painted with water-thinned paints shall be spot primed with aluminum paints.

G. In order to provide contrast between successive coats, each coat shall be of such tint as will distinguish it from preceding coats.

H. The Contractor shall not only protect its work at all times but shall also protect all adjacent work and materials by the use of sufficient drop cloths during the progress of the work.

Upon completion of the work, it shall clean up all paint, spots, oil, and stains from floors, glass, hardware, and similar finished items.

I. Paint shall be applied so as to obtain coverage per gallon and the dry film thickness recommended by the manufacturer. Dry film thickness readings shall be taken to insure that required thicknesses have been achieved. The Contractor shall record in a manner satisfactory to the Engineer, the quantities of paint used for successive coats on the various parts of the work.

J. Spraying with adequate apparatus may be substituted for brush application of those paints and in those locations for which spraying is suitable.

K. If paints are thinned for spraying, the film thickness after application shall be the same as though the un-thinned paint were applied by brush. That is, the addition of a thinner shall not be used as a means of extending the coverage of the paint, but the area covered shall be no greater than the area that would have been covered with the same quantity of un-thinned paint.

L. Blast cleaned metal surfaces shall be coated immediately after cleaning, before any rusting or other deterioration or contamination of the surface occurs. Blast cleaned surfaces shall be coated not later than 8 hours after cleaning under ideal conditions or sooner if conditions are not ideal.

M. The use of carbon dioxide or carbon monoxide emitting heaters is not permitted during the painting operation. Only indirect hot-air systems shall be permitted.

3.03 PIPING COLOR CODE: (Where applicable)

The following Tnemec colors shall be utilized to facilitate identification of piping. Only insulation is to be painted on chemical feed lines.

1. Water Lines

Raw	Olive Green	110GN
Settled or Clarified	Aqua	10GN
Finished or Potable	Dark Blue	11SF

2. Wastewater or Potable Waste Lines

Sewer (sanitary or drain)	Dark Gray	34GR
Backwash Waste	Light Brown	68BR
Sludge	Dark Brown	84BR
Sewage Plant Effluent	Clay	07RD

3. Chemical Lines

Alum or Primary Coagulant	Orange	04SF

Ammonia	White	11WH
Carbon Dioxide (Gas, Liquid and Solution	Light Red	26RD
Carbon Slurry	Black	35GR
Caustic Compounds (NaOH Or KOH)	Yellow with Green Band	02SF/09SF
Chlorine (Gas and Solution)	Yellow	02SF
Chlorine Dioxide	Yellow with Violet Band	02SF/14SF
Ferric Chloride	Orange	04SF
Fluoride Compounds	Light Blue with Red Band	25BL/06SF
Lime Slurry	Light Green	08GN
Ozone	Yellow with Orange Band	02SF/04SF
Phosphate Compounds	Light Green with Red Band	08GN/06SF
Polymers or Coagulant Aids	Orange with Green Band	04SF/09SF
Potassium Permanganate	Violet	14SF
Soda Ash	Light Green with Orange Band	08GN/04SF
Sulfuric Acid	Yellow with Red Band	02SF/06SF
Sulfur Dioxide	Light Green with Yellow Band	08GN/02SF

4. Other

Compressed Air	Dark Green	91GN
Gas or Oil	Red	28RD
Other Lines	Light Gray	32GR

B. In situations where two colors do not have sufficient contrast to easily differentiate between them, a 6-inch band of contrasting color shall be painted on one of the pipes at approximately 30-inch intervals.

C. Piping which is not painted shall be color coded with bands placed at each change in direction and no more than 5 feet apart on straight runs.

3.04 PIPING IDENTIFICATION:

A. After painting, piping shall be identified by stenciling using the same specified paint as used on the pipes. Stenciling shall be of wording and color selected by the Engineer and sized as follows:

Outside Diameter of Pipe or Covering	Size of Legend Letters
3/4-inch to 1-1/4-inch	2-inch

1-1/2-inch to 2-inch	3/4-inch
2-1/2-inch to 6-inch	1-1/4-inch
8-inch to 10-inch	2-1/2-inch
Over 10-inch	3-1/2-inch

B. Arrows shall indicate direction of flows. Where "a" is equal to 3/4 of outside diameter of pipe or covering, the arrow shaft shall be 2 "a" long by 3/8 "a" wide. The arrow head shall be an equilateral triangle with sides equal to "a." Maximum "a" dimension shall be 6-inches.

C. Where pipe passes through a wall, use pipe markers and directional arrows on each side of the wall.

D. Use pipe markers and directional arrows every 50 feet along continuous pipe lines.

E. Use a pipe marker and directional arrow at each rise and "T" joint.

F. When using directional arrows, point arrowhead away from pipe markers and in direction of flow. If flow can be in both directions, use a double-headed directional arrow.

G. The Engineer will assist in determining pipe content and direction of flows.

3.05 CLEANUP:

A. The Contractor shall at all times keep the premises free from accumulation of waste material and rubbish caused by its employees or work. At the completion of the painting, it shall remove all tools, scaffolding, surplus materials, and rubbish from and about the buildings and shall leave the work "broom clean" unless more exactly specified.

B. The Contractor shall also, upon completion, remove all paint where it has been spilled, splashed, or splattered on all surfaces, including floors, fixtures, equipment, furniture, glass, hardware, etc., leaving the work ready for inspection.

END OF SECTION

P:\RI\Woonsocket, RI\ENG23-0204 - WWTF GT Internal Upgrades\Specifications\1 - Editing for This Project\09 90 00.00 - PAINTING.docx

SECTION 11 00 00

EQUIPMENT - GENERAL

PART 1 - GENERAL

1.01 WORK INCLUDED:

A. Furnish, install and test all equipment specified in this Contract and as shown on the Drawings. Should information provided herein conflict with information provided in equipment-specific sections, the more stringent requirement shall be met.

1.02 RELATED WORK (WHEN APPLICABLE):

A. Equipment Startup, Certification and Operator Training is specified Division 01.

B. Demolition is specified in Division 02.

C. Metals are specified in Division 05.

D. Painting is specified in Division 09.

E. Electrical work and components are specified in Division 26.

F. Process Pipe is specified in Division 33

G. The Gravity Thickener Mechanism (and its O&M manuals and shop drawings) will be supplied by others and installed as part of this contract. It is included in Division 46.

1.03 QUALITY ASSURANCE:

A. Provide only equipment of proven reliability manufactured by reputable manufacturers.

B. Acceptable manufacturers are listed in each equipment item section in this Division. Substitute or "or-equal" equipment will be allowed only when indicated.

C. Certificates, patents, licenses or other required legalities, when applicable, are specified in each Section of this Division.

D. Manufacturer's names listed in "Acceptable Manufacturers" section of each specification are intended to indicate the type and quality of materials desired. Where the words "or equivalent" or “or equal” are indicated other manufacturers of equal quality that comply fully with the specifications are allowed.

E. The Specifications and Drawings direct attention to certain required features of the equipment but do not purport to cover all details entering into its design and construction. Nevertheless, the Contractor shall furnish the equipment complete in all details and ready for operation for the intended purpose.

F. These Specifications are intended to provide standard equipment of a recognized manufacturer meeting all the requirements of the Specifications. Due to differences in such prefabricated equipment of various manufacturers, submit complete shop drawings, cuts, specifications, etc. to the Engineer to review for compliance with the Contract Documents prior to ordering any equipment. If the equipment differs materially from the dimensions given on the Drawings, submit complete drawings showing elevations, dimensions etc. for the installation. If Engineer's acceptance is obtained for alternate equipment, make any needed changes in the structures, piping or electrical systems necessary to accommodate the equipment at no additional cost to the Owner.

G. Workmanship shall be first class in all respects.

1.04 SUBMITTALS:

A. Provide shop drawings and samples as specified in the General Conditions and Section 01 33 23 of the Contract Documents. Equipment Systems Manufacturers shall integrate all required shop drawings into a common package.

B. Catalog Data: Submit manufacturer's literature and illustrations for all equipment to be installed, including dimensions, construction details, shop painting details, and materials by generic name.

C. Installation Instructions: Submit complete sets of manufacturer's instructions for each equipment item, including equipment storage requirements.

D. Operating Data: Complete operating manuals.

E. Maintenance Data:

1. Maintenance instructions.
2. Parts list.
3. List of special tools (where applicable).

F. Certificates: Submit manufacturer's certification that equipment, accessories and shop painting meet or exceed the Specification requirements. Submit equipment performance testing results as required by these specifications. Should the proposed equipment not comply with all the specification requirements, all deviations from the specification requirements shall be listed.

G. Submit all requirements for interface with controls and/or equipment furnished in Divisions 26 and 40. Submit wiring diagrams as required to accurately depict all

such interface requirements to ensure proper operations of each system or item of equipment.

H. Submittals are further specified in this Division.

I. Guarantees/Warranties as specified below.

J. Attention is directed to the fact that the Drawings are based upon a particular piece of equipment.

1. If the equipment to be provided requires an arrangement differing from that indicated on the Drawings, the Contractor shall prepare and submit for review, detailed mechanical drawings showing all necessary changes. Such changes shall be at no additional cost to the Owner.

K. Contractor shall provide a letter, from each individual equipment manufacturer certifying that the equipment manufacturer or supplier has:

1. Reviewed the Contract Documents, the intended installation by the Contractor, and the intended functional and operational conditions;

2. Determined all conditions to be acceptable; and

3. Found no conditions that would cause the warranty to be void or the equipment to function improperly.

4. The submittals will not be reviewed without the inclusion of these noted certifications.

1.05 GUARANTEE/WARRANTIES:

A. The Contractor shall obtain a warranty from the manufacturer in the name of the Owner. Submit the equipment manufacturer's warranty to the Engineer for review.

B. Equipment that is supplied by a system supplier and is intended to function as a complete and integrated system shall be warrantied by the system supplier as set forth in this specification section.

C. The manufacturer's warranty must guarantee the equipment to be free of defects for a period of one year from the date of Substantial Completion as defined in the General Conditions, unless otherwise stated in the equipment item specification section.

D. All required warranties that run longer than the Contractor's one-year warranty period shall be issued to the Owner after the Contractor's one-year warranty period has expired. The Contractor will be required to handle warranty problems during the one-year warranty period following substantial completion.

E. Any part of mechanical equipment that shows undue or excessive wear, or that fails due to normal operational conditions within the first year of operation after the date of Substantial Completion, shall be considered as evidence of defective material or defective workmanship, and it shall be replaced with equipment or parts to meet the specified requirements at no cost to the Owner.

1.06 DELIVERY, STORAGE AND HANDLING:

A. Coat all machined surfaces subject to corrosion with an easily removable rust preventive compound prior to shipment.

B. Ship fabricated assemblies in the largest sections permitted by carrier regulations, properly labeled for field erection.

C. Deliver equipment in manufacturer's original, unopened and undamaged packages, unless mounted on equipment assembly.

D. Contractor shall perform all maintenance, as required by equipment manufacturer during storage.

E. Should damage occur, immediately make all repairs and replacements necessary to the satisfaction of the Engineer at no costs to the Owner.

F. Store in a manner to protect items with epoxy shop coatings from exposure to UV light that can cause chalking of the epoxy. Length of acceptable exposure prior to providing UV protective measures shall be in accordance with coating manufacturer’s recommendations. This includes protection from UV light after installation while awaiting covering or filling of tanks, or prior to field painting for items scheduled to be topcoated.

PART 2 - PRODUCTS

2.01 GENERAL DESIGN OF EQUIPMENT:

A. All parts and components of mechanical equipment shall be designed for satisfactory service under continuous duty without undue wear, under the specified operating conditions, for a period of not less than one year.

B. All parts of mechanical equipment shall be amply proportioned for all stresses that may occur during operations, and for any additional stresses that may occur during fabrication and erection. Iron castings shall be tough, close-grained gray iron casting, Class 30, in accordance with ASTM A48, latest revision. Structural steel shall conform to ASTM A36.

C. Mechanical equipment, including drives and electrical motors, unless otherwise noted, shall be supplied and installed in accordance with the Williams-Steiger Occupational Safety and Health Act of 1970 and subsequent amendments. The Contractor's attention is drawn to the requirements for equipment guards. The noise

level of equipment, drives and motors, unless otherwise noted, shall not exceed 90 dBA measured 3 feet from the unit under free field conditions.

D. All equipment and machinery furnished under this Contract shall be the latest improved design suitable for the service specified. All equipment and machinery shall be designed and constructed to operate efficiently, continuously and quietly under the specified requirements with a minimum of maintenance, renewals and repairs. The design and construction of all equipment and machinery shall be such as to permit operation with minimum wear, vibration and noise when properly installed.

E. Provide certified bearing life calculations on all equipment bearings.

F. Ample room for erecting, repairing, inspecting and adjusting of all equipment and machinery shall be provided. The design, construction and installation of all equipment and machinery shall conform to and comply with the latest safety codes and regulations.

G. All equipment of identical size, type and service shall be the product of the same manufacturer.

H. All equipment selected shall suit the general arrangement of the space in which it is to be installed.

I. Unless otherwise specified, electrical SCR controller units shall be furnished with the driven equipment, mounted and factory aligned, where applicable. Wiring of motors and controls shall be in accordance with the requirements of Division 16 and other applicable portions of the Specifications. Electrical variable frequency drives shall be furnished under this specification and installed by the electrical contractor, unless otherwise noted as specified in Division 16.

J. Suitable provisions shall be made for easy access for service and replacement parts.

2.02 BOLTS, ANCHOR BOLTS AND NUTS:

A. All necessary bolts, anchor bolts, nuts, washers, lock washers or locking nuts, plates and bolt sleeves shall be furnished by the Contractor in accordance herewith. Anchor bolts shall have suitable washers, lock washers and, where so required, their nuts shall be hexagonal.

B. All anchor bolts, nuts, washers, lock washers, plates, and bolt sleeves shall be galvanized unless otherwise indicated or specified.

C. Expansion bolts shall have malleable iron and lead composition elements of the required number of units and size.

D. Unless otherwise specified, stud, tap, and machine bolts shall be of the best quality refined bar iron. Hexagonal nuts of the same quality of metal as the bolts shall be

used. All threads shall be clean cut and shall conform to AN Standard B 1.1-1974 for Unified Inch Screw Threads (UN and UNR Thread Form).

E. Bolts, anchor bolts, nuts, washers, and lock washers specified to be galvanized, shall be zinc coated, after being threaded, by the hot-dip process in conformity with the ASTM Standard Specification for Zinc (Hot-Galvanized) Coatings on Products Fabricated from rolled, Pressed, and Forged Steel Shapes, Plates, Bars, and Strip, Designation A123, latest revision or the ASTM Standard Specifications for Zinc Coating (Hot Dip) on Iron and Steel Hardware, Designation A153, latest revision as is appropriate.

F. Bolts, anchor bolts, nuts, washers, and lock washers specified to be stainless steel shall be Type 316 stainless steel.

G. Anchor bolts and expansion bolts shall be set accurately. If anchor bolts are set before the concrete has been placed, they shall be carefully held in suitable templates of acceptable design. Where indicated on the Drawings, specified, or required, anchor bolts shall be provided with square plates at least 4-inches by 4-inchs by 3/8-inch. or shall have square heads and washers and be set in the concrete forms with suitable pipe sleeves, or both. If anchor or expansion bolts are set after the concrete has been placed, all necessary drilling and grouting or caulking shall be done by the Contractor and care shall be taken not to damage the structure or finish by cracking, chipping, spalling, or otherwise during the drilling and caulking.

H. All bolts shall be suitable size for the intended purpose, with direct input from the equipment or product manufacturer. In no case shall anchor bolt size be less than 3/8-inch diameter.

I. Stainless steel hardware is required in all submerged applications, and all corrosive atmospheres, including but not limited to the wet well.

2.03 FOUNDATIONS, INSTALLATION AND GROUTING:

A. The Contractor shall furnish the necessary materials and construct suitable concrete foundations for all equipment installed by him, even though such foundations may not be indicated on the Drawings. The tops of foundations shall be at such elevations as will permit grouting as specified below.

B. All such equipment shall be installed by skilled mechanics and in accordance with the instructions of the manufacturer.

C. In setting pumps, motors, and other items of equipment customarily grouted, the Contractor shall make an allowance of at least 1 in. for grout under the equipment bases. Shims used to level and adjust the bases shall be steel. Shims may be left embedded in the grout, in which case they shall be installed neatly and so as to be as inconspicuous as possible in the completed work. Unless otherwise permitted, all grout shall be a suitable non-shrink grout.

D. Grout shall be mixed and placed in accordance with the recommendations of the manufacturer. Where practicable, the grout shall be placed through the grout holes in the base and worked outward and under the edges of the base and across the rough top of the concrete foundation to a peripheral form so constructed as to provide a suitable chamfer around the top edge of the finished foundation.

E. Where such procedure is impracticable, the method of placing grout shall be as permitted by the Engineer. After the grout has hardened sufficiently, all forms, hoppers, and excess grout shall be removed, and all exposed grout surfaces shall be patched in an approved manner, if necessary, given a burlap-rubbed finish, and painted with at least two coats of an acceptable paint.

2.04 ELECTRIC MOTORS:

A. Unless otherwise specified or permitted by the Engineer, all electric motors furnished and installed by the Contractor shall conform to the requirements hereinafter set forth.

1. Ratings of Motors

a. Every motor shall be of sufficient capacity to operate the driven equipment under all load and operating conditions without exceeding its rated nameplate current or power or its specified temperature limit.

b. When the horsepower rating is specified for a motor, the motor furnished shall meet the requirements of the output specified. When the horsepower rating is not specified, the motor shall have sufficient capacity to operate the driven equipment as given in the Detailed Specifications.

c. All electric motors shall have either UL or FM approval ratings.

d. Motor shall have a service factor of 1.15, unless otherwise specified. Motors intended for use on a variable frequency drive shall be rated for inverter duty.

2. Type of Motors

a. All motors shall be of a type having starting characteristics and ruggedness as may be necessary under the actual conditions of operation and, unless otherwise specified, shall be suitable for full-voltage starting.

b. Motors shall be manufactured by General Electric Co., Reliance, Toshiba, Siemens, or be an equivalent product, that meets all the requirements herein.

c. All motors shall have Class F insulation with temperature rise in accordance with NEMA Standards for Motors and Generators and based on a maximum ambient temperature of 40 deg. C.

e. Explosion-proof motors shall comply with all requirements of Class I, Division 1, Group D, hazardous locations as defined by the National Electrical Code and with all other safety codes pertaining thereto. Explosion proof motors shall be rated explosion proof for continuous in air duty.

f. All motors shall be premium efficiency type, unless specifically excluded under the Energy Independence and Security Act of 2007 (EISA). The minimum guaranteed efficiency shall be printed on the motor nameplate. The efficiency values (full-load for NEMA Premium efficiency motors) shall be the highest available for the type and size of motor, and meet or exceed the values in the following table for motors with 200 horsepower and less:

Enclosed Motors
Nominal Efficiency (%)

HP	2 Pole	4 Pole	6 Pole
1	77.0	85.5	82.5
1.5	84.0	86.5	87.5
2	85.5	86.5	88.5
3	86.5	89.5	89.5
5	88.5	89.5	89.5
7.5	89.5	91.7	91.0
10	90.2	91.7	91.0
15	91.0	92.4	91.7
20	91.0	93.0	97.7
25	91.7	93.6	93.0
30	91.7	93.6	93.0
40	92.4	94.1	94.1
50	93.0	94.5	94.1
60	93.6	95.0	94.5
75	93.6	95.4	94.5
100	94.1	95.4	95.0
125	95.0	95.4	95.0
150	95.0	95.8	95.8
200	95.4	96.2	95.8

3. General Design of Motors

a. Motors shall comply with the latest NEMA Standards for Motors and Generators, unless otherwise specified.

b. Motor windings shall be braced to withstand successfully the stresses resulting from the method of starting. The windings shall be treated thoroughly with acceptable insulating compound suitable for protection against moisture and slightly acid or alkaline conditions.

c. Bearings shall be of the self-lubricating type, designed to ensure proper alignment of rotor and shaft and to prevent leakage of lubricant.

d. Bearings for open motors shall be of the sleeve or ball type, as specified under the respective items of mechanical equipment. Bearings for totally enclosed and explosion-proof motors shall be of the ball type.

e. Vertical motors shall be provided with thrust bearings adequate for all thrusts to which they can be subjected in operation.

f. Vertical motors of the open type shall be provided with drip hoods of acceptable shape and construction. When the drip hood is too heavy to be easily removed, provision shall be made for access for testing.

4. Wound-Rotor Induction Motors

a. Wound-rotor motors shall be designed for operation of the motor-driven equipment under the conditions specified in the Detailed Specifications.

b. Motors shall be of the wound-rotor, induction type suitable for speed control by rotor resistance.

c. The collector rings shall be constructed of hard composition metal of sufficient conductivity and ample contact surface. The rings shall be mounted accurately and securely on the shaft by means of acceptable insulating construction. The leads to the collector rings shall be fastened to and insulated from the shaft in a suitable manner.

d. The collector rings and brushes for the wound-rotor induction motors shall be suitable for operation in an atmosphere containing moisture.

e. The brushes shall be of the electrographite type, or other suitable type, of sufficient hardness and conductivity and shall have ample contact surfaces. Brush holders shall be provided with adjustable, spring-tension devices. Brushes shall be connected to the holders with tinned, flexible, copper-wire pigtails so arranged that no appreciable current shall be carried through the sliding contacts or springs. Brushes shall operate without noise or chattering. Rings and brushes shall be located on top of the motor, and shall be easily accessible for inspection and maintenance.

5. Synchronous Motors

a. Synchronous motors shall comply in all respects with the latest NEMA Standards for Motors and Generators, and AN Standard C50 for Rotating Electrical Machinery.

b. Synchronous motors shall be designed for operation of the motor-driven equipment under the conditions specified in the Detail Specifications.

c. The temperature rise (based on a cooling temperature not exceeding 40 deg. C. and an altitude not exceeding 3,300 ft.) in the various parts of the

motors, when operating continuously at rated voltage, frequency, and power factor, shall conform to the applicable requirements of the above-mentioned NEMA Standards.

d. Synchronous motors shall be manufactured by General Electric Co., or be an equivalent product.

6. Single-Phase Motors with Auxiliary Devices

a. Single-phase motors requiring switching devices and auxiliary starting resistors, capacitors, or reactors shall be furnished as combination units with such auxiliaries either incorporated within the motor housings or housed in suitable enclosures mounted upon the motor frames. Each combination unit shall be mounted upon a single base and shall be provided with a single conduit box.

7. Motor Terminal Boxes and Leads

a. Motors shall be furnished with oversize conduit terminal boxes to provide for making and housing the connections and with flexible leads of sufficient length to extend for a distance of not less than 4-inches beyond the face of the box. The size of cable terminals and conduit terminal box holes shall be as permitted by the Engineer. An acceptable type of solderless lug shall be furnished. Totally enclosed and explosion-proof motors shall have cast-iron terminal boxes.

8. Special Motors

a. Hoists and other devices complying with special safety codes shall be furnished complete with their control equipment and with all accessories and safety devices for code-approved, safe, and efficient operation.

2.5 DRIVE COUPLINGS:

A. Couplings shall be all metal, flexible, designed for both angular and parallel misalignment, provided with a guard, and provided with a means for lubrication.

B. Close-coupled connections shall have machined shouldered joints for motor and pump motor support.

C. Acceptable Manufacturers:

1. H.S. Watson, Co. Toledo, Ohio

a) Watson-Spicer Shafts

2. Mechanics Universal Joint Division of Borg-Warner Corporation, Rockford, Illinois

a) Flexible Shafts

3. Or equivalent

D. Drive couplings for mixers which differ from the above referenced all metal type, which are standard integral parts of a mixer manufacturer's assembly may be permitted, with review and approval of the Engineer.

2.06 BELT DRIVES:

A. V-belt drives shall be provided with front removable guards (refer to Section 2.12), not requiring disturbing of the sheaves.

B. Capable of upsize and downsize sheaving.

C. Design shall be based upon minimum 1.5 service factor, unless specified elsewhere.

2.07 MECHANICAL-TYPE VARIABLE-SPEED DRIVE UNITS (When Applicable):

A. Type as specified in equipment specification sections and as shown on the Drawings.

B. The variable-speed transmission shall be a self-contained drive which shall consist of a totally enclosed constant-speed motor, a housing on which the motor is mounted and which encloses an adjustable, heavy duty V-belt drive between two variable-pitch pulleys and the output shaft.

2.08 SCR CONTROLLERS:

A. Each SCR controller shall be a completely solid state assembly consisting of an electronic switching amplifier, silicon controlled full wave rectifier and associated circuitry.

B. Bridge and gate trigger circuitry shall employ printed circuit boards.

C. Any required power transformers shall be supplied as appropriate.

D. The SCR units shall be heavy-duty type suitable for handling the full current rating of the motors and brief acceleration current.

E. The assembly shall be mounted on a heat sink but insulated therefrom.

F. Power supply to the SCR controllers shall be 115 volts, single phase, 60 Hz.

G. Each unit shall be factory wired and tested with all leads brought out to terminal strips to facilitate connections to the motors and local control stations.

H. Each SCR unit shall include the following features:

1. Full wave rectification.

2. Power cube containing all power semi-conductors in a single component.

3. Armature contactor with auxiliary normally open and normally closed contacts.

4. Circuit breaker to provide overload protection.

5. Surge suppressers to protect semi-conductors from line surges and transients.

6. Adjustable current limit.

7. Adjustable IR compensation.

8. Voltage level and current capacities shall meet the requirements of the connected equipment (i.e. 90V DC output for 90V DC motors).

2.09 GEAR REDUCTION UNITS:

A. Gears of gear reduction units shall be made of highest quality alloys treated for hardness and severe service. All gear reduction units on equipment shall be selected for Class II or more severe service as classified by the American Gear Manufacturers Association.

B. Unless otherwise specified, the complete reduction unit shall be fully enclosed in a heavy cast-iron or fabricated steel housing with gears running in oil. All bearings shall be of the anti-friction type.

C. The actual and rated horsepower, torque, overhang capacity, or bearing capacity of each reduction unit shall be not less than the horsepower rating of the drive motor, nor less than that which will be encountered under full load or under the most severe loading conditions of the equipment. The Engineer may reject any gear reduction unit that does not meet the above requirements. The manufacturer of gear reduction units shall be long established with a good reputation.

D. Unless otherwise specified, all gear reduction units shall be helical or spiral bevel helical combinations. The planetary gear units and worm gear type units may be used only where specified. Class of service shall be Class II or heavier, as determined by the manufacturer or as required by the Engineer.

E. The equipment manufacturer shall furnish the Engineer with complete engineering information, catalog data, design features, loading capacities, and mechanical efficiency ratings for every gear reduction unit incorporated in the work.

2.10 LUBRICATION FITTINGS:

A. All lubrication fittings shall be brought to the outside of all equipment so that they are readily accessible from the outside without the necessity of removing covers,

plates, housings, or guards, or without creating falling hazards by unusual elevations. Fittings shall be buttonhead type. Lubrication fittings shall be mounted together wherever possible.

B. Pressure grease-lubricated fittings shall be the "Zerk Hydraulic" type or the "Alemite" type.

C. Housings of grease-lubricated bearings shall be automatically exhausted to the atmosphere to prevent excessive greasing.

D. Oil drains shall be piped to a location outside the equipment frame for ease of draining. Provide ball valve for positive shutoff. Pipe shall be type-L copper or galvanized steel.

2.11 SPECIAL TOOLS:

A. For each type of equipment furnished by him, the Contractor shall provide a complete set of all special tools (including grease guns or other lubricating devices) that may be necessary for the adjustment, operation, maintenance, and disassembly of such equipment. Tools shall be high-grade, smooth, forged, alloy, tool steel. Grease guns shall be lever type.

B. Special tools are considered to be those tools which because of their limited use are not normally available, but which are necessary for the particular equipment.

C. Special tools shall be delivered at the same time as the equipment to which they pertain. The Contractor shall properly store and safeguard such special tools until completion of the work, at which time they shall be delivered to the Owner.

2.12 EQUIPMENT DRIVE GUARDS:

A. All equipment driven by open shafts, belts, chains, or gears shall be provided with all-metal guards enclosing the drive mechanism. Guards shall be removable with quick open latches.

B. Guards shall be constructed of galvanized sheet steel or galvanized woven wire or expanded metal set in a frame of galvanized steel members, unless otherwise specified.

C. Guards shall be secured in position by steel braces or straps that will permit easy removal for servicing the equipment.

D. The guards shall conform in all respects to all applicable safety codes and regulations.

2.13 PROTECTION AGAINST ELECTROLYSIS:

A. Where dissimilar metals are used in conjunction with each other, suitable insulation shall be provided between adjoining surfaces so as to eliminate direct contact and any resultant electrolysis.

B. The insulation shall be bituminous impregnated felt, heavy bituminous coatings, nonmetallic separators or washers, or other acceptable materials.

2.14 NAMEPLATES:

A. Each piece of equipment shall be provided with a substantial nameplate of noncorrodible metal, securely fastened in place and clearly and permanently inscribed with the manufacturer's name, model or type designation, serial number, principal rated capacities, electrical or other power characteristics, and similar information as appropriate.

B. Provide a plastic engraved nameplate to be affixed to the equipment frame indicating the equipment name. Nameplate shall be black plastic with a white background.

2.15 SURFACE PREPARATION AND SHOP COATINGS:

A. Provide surface preparation and shop coatings in accordance with Specification Section 09 90 00.

2.16 ELECTRICAL CONTROLS:

A. Additional controls for various items of equipment are specified under Division 26 and/or Division 40, as indicated on the Drawings, and as specified. Due to potential differences in electrical requirements for equipment of various manufacturers, the Contractor shall coordinate the electrical requirements of the equipment supplied with the work specified in Division 26 and/or Division 40.

B. Provide auxiliary contacts as required for remote status and alarm conditions. Contractor to coordinate for each piece of equipment. Refer to the Electrical and Instrumentation Drawings.

2.17 GAUGES:

A. General:

1. Gauge assemblies shall be complete with 1/2-inch brass pipe and fittings, 1/2-inch ball valve with bronze body, stainless steel ball, Teflon seats and spring-closing handle and a tee with a brass test cock with female outlet end all arranged to allow field checking with a 4½-inch test gauge. For chemical feed systems, material of construction to be compatible with chemical.

2. All gauges shall be equipped with snubbers. If single snubber does not correct pulsing, provide additional snubbers in series.

3. All gauges shall meet requirements as outlined hereinafter.

4. All gauges provided are to be from the same manufacturer.

B. Process Liquid Applications:

1. Gauges shall be furnished for the suction and discharge nozzle of each pump and where called for on the Drawings or within other Specification Sections.

2. Gauges shall be round black case, 4½-inches diameter, 1/2-inch NPT bottom male threaded connections, stainless steel rack and pinion movement, black micro-adjusted rezeroing pointers, rack and pinion movement, black micro-adjusted rezeroing pointers, and black figures with white plastic dials and a threaded ring. Gauges shall have an accuracy of 1/2 percent of scale range.

3. Gauges shall be bracket supported.

4. Gauges shall be filled with glycerin and shall be furnished complete with factory-mounted protective diaphragm attachment and snubber which will allow cleaning of the lower diaphragm assembly without breaking the seal or refilling and shall not require recalibration of the gauge. The diaphragm shall be stainless steel with a stainless steel seal and shall be fitted with a bleed screw on the lower side. The diaphragm shall be rated for gauge operating pressure range. Other diaphragm materials will be considered for acceptance on a case-by-case basis when dictated by chemical compatibility. Provide a locking plate or lock-wire to prevent turning of the assembly.

5. Suction gauges shall be compound type having a range of 15 feet to 0 to +30 feet.

6. Discharge gauge shall be selected at the nearest standard range to read in feet of water that provides a top limit above the pump shutoff head at the operating conditions or pump relief valve setting.

C. Water for Disinfection System:

D. gauges shall be manufactured by:

1. Ameteck U.S. Gauge Division
2. Ashcroft
3. Trerice
4. or equal.

E. Contractor shall provide a gauge schedule listing all gauges, functions, locations, scales, etc., as part of the shop drawing submittal package.

PART 3 - EXECUTION

3.01 INSPECTION:

A. Inspect structures and anchor supports for defects prior to equipment arrival.

B. Carefully inspect all equipment for:

1. Damage in shipping.

2. Defects in workmanship and materials.

3. Tightness of all nuts and bolts.

C. Inspection shall include, but not be limited to, the following as applicable:

1. Soundness (without cracked or damaged parts).

2. Correctness of setting, alignment, and relative arrangement of various parts.

3. Adequacy and correctness of packing, sealing and lubricants.

4. Completeness in all details, as specified.

D. Field Quality Control

1. As part of the equipment cost, the Contractor shall provide the services of the manufacturer's service representative to assist the Contractor with equipment adjustment, start-up, and necessary testing to prove that the equipment is in proper and satisfactory operating condition.

2. On completion of his work, the manufacturer's service representative shall provide written certification that the equipment conforms to the requirements of the Contract and is ready for permanent operation and that nothing in the installation will render the manufacturer's warranty null and void, as outlined in the attached equipment certification form.

3. As part of the start up services, the manufacturer's services representative shall provide the Owner's personnel with training in the proper operation and maintenance of all associated equipment. The equipment training certification form shall be used for this purpose.

4. When work is substantially complete the Contractor will be demonstrate to the satisfaction of the Engineer the ability of all equipment to operate as intended without defect including binding, vibration, jamming, overheating, etc.

5. All equipment found defective by the Engineer shall be replaced by the Contractor at no expense to the Owner.

3.02 PREPARATION:

A. Provide all required adhesives, sealants, insulation, lubricants, waterproofing, fireproofing or other protection specified in each Section of this Division.

3.03 INSTALLATION:

A. Contractor shall install equipment in accordance with manufacturer's requirement.

B. Do not install equipment until all defects or inadequacies in receiving structure have been corrected to meet Specifications.

C. Erect and lubricate equipment in strict accordance with the manufacturer's instruction. Installation shall include all oil and grease required for proper operation.

D. All equipment mechanisms shall withstand all stresses that may occur during fabrication, erection, and intermittent or continuous operation.

E. Contractor to furnish and install supports as indicated on the Drawings, and as required by the equipment manufacturer.

F. Thoroughly clean all equipment and appurtenant piping to remove all dirt, grease, mill scale, and other foreign matter and touch up factory finish to the satisfaction of the Engineer.

3.04 STARTUP AND TESTING:

A. Test and adjust all equipment in accordance with the general requirements of Division 1, 33, 41, 43, 44, and 46, as applicable.

B. Contractor shall provide necessary water or other materials needed for testing.

C. Demonstrate the equipment's ability to operate without overloading jamming, excessive vibration, etc. during normal operation conditions.

3.05 EXISTING EQUIPMENT RELOCATION:

A. All relocated equipment shall be reconditioned and serviced prior to operation in the new locations. Equipment shall be cleaned, rust removed, reprimed and painted in accordance with Division 09, balanced, lubricated, oiled, calibrated and properly wired and plumbed to provide the intended service. Start up of relocated equipment shall be done in accordance with the manufacturers instructions.

END OF SECTION

SECTION 26 00 00

ELECTRICAL

PART 1 - GENERAL 1

1.01 GENERAL PROVISIONS 1
1.02 GENERAL REQUIREMENTS 1
1.03 EXAMINATION OF SITE AND DOCUMENTS 2
1.04 DESCRIPTION OF WORK 2
1.05 RELATED WORK 2
1.06 DEFINITIONS 3
1.07 INSPECTION OF SITE 3
1.08 CONTRACTOR'S REPRESENTATIVE 3
1.09 COOPERATION 4
1.10 CODES, ORDINANCES, AND PERMITS 4
1.11 ELECTRICAL ROOMS OR SPACES 4
1.12 SUBMITTALS 5
1.13 GUARANTEE 5
1.14 ELECTRICAL CHARACTERISTICS 5
1.15 RECORD DRAWINGS 6
1.16 OPERATING INSTRUCTIONS AND MAINTENANCE MANUALS 6
1.17 INSPECTIONS AND TESTS 6

PART 2 - PRODUCTS 7

2.01 GENERAL 7
2.02 RACEWAYS AND FITTINGS 7
2.03 CONDUCTORS 12
2.04 SLEEVES, INSERTS, AND OPENINGS 15
2.05 WIRING DEVICES 16
2.06 GROUNDING SYSTEM 18
2.07 UNDERGROUND DUCTBANKS 20
2.08 SEALS 22
2.09 CIRCUIT BREAKERS IN EXISTING MOTOR CONTROL CENTER 22

PART 3 - EXECUTION 23

3.01 WORK COORDINATION AND JOB OPERATIONS 23
3.02 PLANS AND SPECIFICATIONS 24
3.03 IDENTIFICATION 24
3.04 PROTECTION AND CLEANUP 29
3.05 PORTABLE OR DETACHABLE PARTS 30
3.06 SAFETY PRECAUTIONS 30
3.07 WORKMANSHIP AND INSTALLATION METHODS 30
3.08 FEEDER CIRCUITS 38
3.09 BRANCH CIRCUITS 38

3.10 FIREPROOFING AND WATERPROOFING 38

END OF INDEX 26 00 00

SECTION 26 00 00

ELECTRICAL

PART 1 - GENERAL

1.01 GENERAL PROVISIONS

A. Attention is directed to the CONTRACT AND GENERAL CONDITIONS and all Sections within DIVISION 1 - GENERAL REQUIREMENTS which are hereby made a part of this Section of the Specifications.

1.02 GENERAL REQUIREMENTS

A. The Conditions of the Contract and General Requirements of the Project Manual apply to this Subcontractor, material suppliers, and all other persons furnishing labor and materials under this Section. The General Conditions, and applicable parts of Division 01 are included as part of this Section.

B. Examine all Project Specifications and Drawings for requirements which affect work of this Section whether or not such work is specifically mentioned in this Section.

C. Coordinate work with that of all other trades affecting or affected by work of this Section. Cooperate with such trades to assure the steady progress of all work under the Contract.

D. The following definitions apply to the Drawings and Specifications:

1. Furnish: The term "furnish" is used to mean "supply and deliver to the Project Site, ready for unloading, unpacking, assembly, installation, and similar operations".
2. Install: The term "install" is used to describe operations at the Project Site including actual "unloading, unpacking, assembly, erection, piecing, anchoring, applying, working to dimension, finishing, curing, protecting, cleaning, and similar operations".
3. Provide: The term "provide" is used to mean "furnish and install, complete and ready for the intended use".
4. Installer: An "installer" is the Contractor or an entity engaged by the Contractor, either as an employee, Subcontractor, or Sub-Subcontractor for performance of a particular construction activity, including installation, erection, application, and similar operations. Installers are required to be experienced in the operations they are engaged to perform.

E. When open-flame or spark producing tools such as blow torches, welding equipment, and the like are required in the process of executing the work, the General Contractor shall be notified not less than twenty four (24) hours in advance of the time that the work is to begin and the location where work is to be performed. Provide fire protective covering and maintain constant non-working fire watch where work is being performed until it is completed.

1.03 EXAMINATION OF SITE AND DOCUMENTS

A. Bidders are expected to examine and to be thoroughly familiar with all contract documents and with the conditions under which work will be carried out.

1.04 DESCRIPTION OF WORK

A. Work described herein shall be interpreted as work to be done by the Electrical Subcontractor. Work to be performed by other trades will be referenced to a particular contractor or subcontractor.

B. Provide all labor, materials, tools, and equipment, to complete the installation of the electrical system. Install, equip, adjust, and put into operation the respective portions of the installation specified, and so interconnect various items or sections of work in order to form a complete and operating whole. Systems may be referenced in singular or plural terms, also refer to drawings to confirm quantities.

C. Where the Contract drawings conflict with themselves or the specifications. The contractor shall carry the higher quantity or quality.

D. The work shall consist of, but shall not necessarily be limited to the following:

1. Raceways, panelboards, distribution panels, feeders and subfeeders.
2. All raceway systems, including pull boxes, couplings, and fittings.
3. Systems Identification.
4. Coordination Drawings.
5. Phasing and demolition.
6. All testing of equipment installed.
7. Any other item of work hereinafter specified or indicated on electrical drawings.

1.05 RELATED WORK

A. The following related work is performed under designated sections.

1. Temporary Controls – SECTION 01 52 13 – TEMPORARY FACILITIES.
2. Excavation and Backfill: Division 31 – EARTHWORK.
3. Payment for energy for temporary light and power shall be made by General Contractor.

4. Temporary Power and Lighting: Section 01 52 13 – TEMPORARY FACILITIES.

1.06 DEFINITIONS

A. Most terms used within the documents are industry standard. Certain words or phrases shall be understood to have specific meanings as follows:

1. Reviewed: When used to convey Designer's action on General Contractor's submittals, applications and requests, "reviewed" is limited to Designer's duties and responsibilities as stated in the Conditions of the Contract.
2. Directed: A command or instruction by Designer. Other Terms including "requested", "authorized", "selected", "approved", "required" and "permitted" have the same meaning as "directed".
3. Indicated: Requirements expressed by graphic representations or in written form on Drawings, in Specifications, and in other Contract Documents. Other terms including "shown", "noted", "scheduled" and "specified" have the same meaning as "indicated".
4. Regulations: Laws, ordinances, statutes, and lawful orders issued by authorities having jurisdiction, and rules, conventions and agreements within the construction industry that control performance of the Work.
5. Furnish: Supply and deliver to Project site, ready for unloading, unpacking, assembly, installation and similar operations.
6. Install: Operations at Project site including unloading, temporarily storing, unpacking, assembling, erecting, placing, anchoring, applying, working to dimension, finishing, curing, protecting, cleaning and similar operations.
7. Conduit: Raceways of the metallic type which are not flexible. Specific types as specified.
8. Connect: To wire up, including all branch circuitry, control and disconnection devices so item is complete and ready for operation.
9. Subject to Mechanical Damage: Equipment and raceways installed exposed and less than eight feet above finished floor in mechanical rooms or other areas where heavy equipment may be in use or moved.
10. Provide: Furnish and install completely connected up and in operable condition.

1.07 INSPECTION OF SITE

A. Electrical contractor shall inspect site. Failure to inspect existing conditions or to fully understand work which is required shall not excuse this contractor from his obligations to supply and install work in accordance with specifications and the drawings and under all site conditions as they exist.

1.08 CONTRACTOR'S REPRESENTATIVE

A. Retain a competent representative on the project. It is prohibited to substitute representative without prior approval from Owner.

1.09 COOPERATION

A. Work shall be carried on under usual construction conditions, in conjunction with other contractors work. Cooperate with other contractors, coordinate work and proceed in a manner as not to delay progress.

B. Before proceeding, examine all construction drawings and consult other contractors to coordinate installation and avoid interference.

C. In case of dispute, the Architect will render a decision in accordance with General and Supplementary General Conditions.

1.10 CODES, ORDINANCES, AND PERMITS

A. Codes and Ordinances:

1. All material and work provided shall be in accordance with the following codes and standards as most recently amended.
   Rhode Island Building Code
   National Electric Code, 2023 Edition
   NFPA 101 "Life Safety Code"
   NFPA Standards
   NEMA TCB 2-2017
   Standards of the Underwriters Laboratories (UL)
   Occupational Safety and Health Act (OSHA)
   Americans with Disabilities Act (ADA)
   Energy Conservation Code
   Town of Woonsocket
2. Where contract documents indicate more stringent requirements than codes, the contract documents shall take precedence.

B. Permits:

1. Be responsible for filing documents, payment of fees, and securing of inspection and approvals. Refer to instructions to bidders.

1.11 ELECTRICAL ROOMS OR SPACES

A. Be responsible for ensuring that the dedicated space and clearances required in the NEC, Sections 110-26 are maintained for all electrical equipment.

B. Call other contractors' attention to the requirements contained in the above mentioned code sections, prior to the installation of equipment by other contractors, in order to ensure no violations.

1.12 SUBMITTALS

A. Refer to Section 01 33 23 for information relative to submission of shop drawings. Six (6) copies are required. No equipment for which review is required shall be installed prior to review, except at Contractor's own risk. Shop Drawings will be required for all electrical equipment.

B. Notwithstanding any restrictions upon contractor proposed substitutions, should apparatus or materials be permitted by Architect to be substituted for those specified for good cause, and such substitution necessitates changes in or additional connections, piping, supports, or construction, same shall be provided. Assume cost and entire responsibility thereof.

C. Submit the following samples:
   1. Other items as may be requested.

1.13 GUARANTEE

A. All parts of the work shall be guaranteed for a period of one (1) year from the date of acceptance of the job by Owner. If during that period of general guaranty, any part of the work fails, becomes unsatisfactory, or does not function properly due to any fault in material or workmanship whether or not manufactured or job built, the Owner shall upon notice from owner promptly proceed to repair or replace such faulty material or workmanship without expense to owner, including cutting, patching, and painting, or other work involved, and including repair or restoration of any damaged sections of the premises resulting from such faults.

1.14 ELECTRICAL CHARACTERISTICS

A. In general, and unless specifically indicated otherwise, all building service, heating, ventilating, air conditioning, and plumbing equipment shall be of the following characteristics.
   1. Motors up to and including 1/3 HP shall be suitable for 120 volts, one phase operation.
   2. Motors larger than 1/3 HP shall be suitable for 480 volts, three phase operation.
   3. Electric heating equipment 4.0 KW and less shall be suitable for 277 volt single phase operation. Over 4.0 KW shall be 480 volt three phase.

B. Power Factor: All equipment provided rated greater than 1,000 watts with an inductive reactance load component shall have a power factor of not less than 90% under rated load conditions.

1.15 RECORD DRAWINGS

A. Provide two (2) sets of black or blue line on white drawings to maintain and submit record drawings, one set shall be maintained at site and which shall be accurate, clear, and complete showing actual location of all equipment as installed. Record drawings shall be updated at least monthly. Record drawings shall show outlet from which homeruns are taken, and location of all pull boxes. These drawings shall be available to Architect/Engineer field representative.

B. Any addenda sketches and supplementary drawings issued during course of construction shall be attached to drawings.

C. At completion, submit an accurate checked set of drawings.

D. After approval of these drawings, photo reproductions of original tracings shall be revised to incorporate changes, including addenda sketches and supplementary drawings. Fitup drawings for tenant areas shall also be revised in the same manner. These "as-built" photo reproductions shall be certified as correct and delivered to the Architect along with two (2) sets of black line prints and Auto CAD files on USB Thumb Drive of all changes.

1.16 OPERATING INSTRUCTIONS AND MAINTENANCE MANUALS

A. Operating Instructions: Furnish operating instructions to Owner's designated representative with respect to operations, functions and maintenance procedures for equipment and systems installed. Cost of such instruction up to a full one (1) day of Electrical Subcontractor's time shall be included in contract. Cost of providing a manufacturer's representative at site for instructional purposes shall also be included as outlined in each system herein.
   1. Refer to Sections 01 33 23.13 and 01 92 13 for O&M Submittal requirements.

1.17 INSPECTIONS AND TESTS

A. Inspection: If inspection of materials installed shows defects, such defective work, materials, and/or equipment shall be replaced and inspection and tests repeated.

B. Tests: Make reasonable tests and prove integrity of work and leave electrical installation in correct adjustment and ready to operate. All panels and switchboards shall have phases balanced as near as practical. A consistent phase orientation shall be adhered to at all terminations.

PART 2 - PRODUCTS

2.01 GENERAL

A. Product specifications are written in such a manner so as to specify what materials may be used in a particular location or application and therefore do not indicate what is not acceptable or suitable for a particular location or application. As an example: non-metallic sheathed cable is not specified; therefore, it is not acceptable.

B. For purpose of establishing a standard of quality and not for purpose of limiting competition, the basis of this Specification is upon specified models and types of equipment and materials, as manufactured by specified manufacturers.

C. In all cases, standard cataloged materials and systems have been selected. Materials specially manufactured for this particular project and not part of a manufacturers' standard product line will not be acceptable. In the case of systems, the system components shall be from a single source regularly engaged in supplying such systems. A proposed system made up of a collection of various manufacturers' products will be unacceptable.

D. Where Specifications list manufacturers' names and/or "as approved" or "Equal approved by Contracting Officer", other manufacturers' equipment will be considered if equipment meets Specification requirements and has all features of the specified items as are considered essential by Architect.

E. All material shall be new and shall be UL listed.

2.02 RACEWAYS AND FITTINGS

A. Raceways - General:

1. No raceway shall be used smaller than 3/4" diameter and shall have no more than four (4) 90° bends in any one run, and where necessary, pull boxes shall be provided. Only rigid metal conduit or intermediate metal conduit is allowed for slab work and only where allowed by Architect.
2. Rigid metal conduit conforming to, and installed in accordance with, Article 344 shall be heavy wall zinc coated steel conforming to American Standard Specification C80-1 and may be used for service work, exterior work, slab work, and below grade level slab, wet locations, where raceway may be subject to mechanical damage.
3. Intermediate metal conduit conforming to, and installed in accordance with, Article 342, may be used for all applications where rigid metal conduit is allowed by these specifications.
4. Electrical Metallic Tubing (EMT), conforming to, and installed in accordance with, Article 358 shall be zinc coated steel, conforming to industry standards, may

be used in masonry block walls, stud partitions, above furred ceilings, where exposed but not subject to mechanical damage.

5. Surface metal raceways conforming to, and installed in accordance with, Article 386 may be used only where raceways cannot be run concealed, and then, if only specifically approved.
6. Flexible metal conduit shall be used for final connections to recessed lighting fixtures from above ceiling junction boxes and for final flexible connections to motors and other rotating or vibrating equipment. Liquid tight flexible metal conduit shall be used for the above connections which are located in moist locations. All flexible connections shall include an insulated grounding conductor.
7. Rigid non-metallic conduit may be used for underground electric and low tension services outside the foundation wall and shall be polyvinyl chloride (PVC) schedule 40, 90 deg. C.
8. PVC shall be UL 651A listed and meet NEMA TC2.
9. PVC schedule 40 may also be used for below slab work within building confines and below grade branch circuits and feeders outside the building foundation. Raceway and fittings shall be of the same manufacturer. Below slab conduits do not require concrete encasement.
10. Acceptable manufacturers:
    a. Pittsburgh Standard Conduit Company
    b. Republic Steel and Tube
    c. Youngstown Sheet and Tube Company
    d. Carlon
    e. Or Approved Equal

11. Fittings:
    a. Provide insulated bushings on all raceways 1 inch diameter or larger.
    b. Manufacturer's standard fittings shall be used for raceway supports.
    c. Expansion Fittings: Expansion fittings shall be used where structural and concrete expansion joints occur and shall include a ground strap.
    d. Couplings for rigid metal and intermediate metal conduit shall be threaded type.
    e. Threadless fittings for EMT shall be set screw type. All fittings shall be concrete tight. No diecast fittings allowed except for raceways larger than 1 inch diameter.
    f. Wall entrance seals shall be equal to O.Z. Gedney type "WSK".
    g. Couplings, elbows and other fittings used with rigid nonmetallic conduit shall be of the solvent cemented type to secure a waterproof installation.
    h. Acceptable manufacturers:
        1) O.Z.
        2) Crouse Hinds
        3) Appleton
        4) EFCOR
        5) Steel City

6) Or approved equal

12. PVC coated, threaded conduit shall be used in corrosive environments and where penetrating the slab and exposed. Where penetrating the slab and exposed the PVC coated conduit shall extend to two feet above finished floor.
    a. Manufacturers:
        1) Permacote
        2) Plasti-Bond
        3) KorKap
        4) Or Equal

13. Conduits for use in Corrosive Environments (wet wells, valve, vaults, apparatus bays, parking garage, garage bays, chemical storage rooms sallyports etc.):
    a. General:
        1) Scope:
            a) The PVC-coated, threaded conduit system is specifically designed to prevent corrosive conditions from causing early replacement of the conduit. All the conduit, fittings, and supporting products shall be provided by the same manufacturer to ensure that a five-year product warranty is achieved.
        2) Classification and Use:
            a) The PVC-coated, threaded conduit system is approved for all applications where rigid metal conduit is permitted. Also, it will replace the need for wider fill around Rigid Metal Conduit (RMC) where judged suitable for the conditions (reference NEC Article 344, II, C).
    b. Product:
        1) PVC-coated, Galvanized Rigid Conduit (GRC) and fittings as manufactured by Plasti-Bond, Perma-Cote, and KorKap. Any deviation will require approval of the specifying engineer or owner and shall meet all the performance standards specified herein and verified by a nationally recognized testing agency.
        2) Materials:
            a) The PVC coated galvanized rigid conduit must be UL Listed and ETL Verified. Both the PVC and Zinc coating must have been investigated by UL as providing primary corrosion protection for the rigid metal conduit. Ferrous fittings for general service locations must be UL Listed with PVC as the primary corrosion protection. Hazardous location fittings, prior to plastic coating must be UL listed. All conduit and fittings must be new, unused material.

b) The PVC coated galvanized rigid conduit must be ETL Verified to the Intertek ETL High Temperature H2O PVC Coating Adhesion Test Procedure for 200 hours. The PVC coated galvanized rigid conduit must bear the ETL Verified PVC-001 label to signify compliance to the adhesion performance standard.

c) The conduit shall be hot dip galvanized inside and out with hot galvanized threads.

d) A PVC sleeve extending one pipe diameter or two inches, whichever is less, shall be formed at every female fitting opening except unions. The inside sleeve diameter shall be matched to the outside diameter of the conduit. The PVC coating on the outside of conduit couplings shall have a series of longitudinal ribs 40 mils in thickness to protect the coating from tool damage during installation.

e) Form 8 Condulets shall have a V-Seal tongue-in-groove gasket to effectively seal against the elements. The design shall be equipped with a positive placement feature to ease and assure proper installation. Certified results confirming seal performance at 15 psig (positive) and 25 in. of mercury (vacuum) for 72 hours shall be available. Form 8 Condulets shall be supplied with plastic encapsulated stainless steel cover screws.

f) Urethane coating of nominal 2 mil thickness shall be uniformly and consistently applied to the interior of all conduit and fittings. Conduit or fittings with thin or no coating shall be unacceptable.

g) The PVC exterior and urethane interior coatings applied to the conduit shall afford sufficient flexibility to permit field bending without cracking or flaking at temperatures above 30°F (-1°C).

h) All female threads on fittings and couplings shall be protected by urethane coating.

i) Right angle beam clamps and U bolts shall be specially formed and sized to snugly fit the outside diameter of the coated conduit. All U bolts will be supplied with plastic encapsulated nuts that cover the exposed portions of the threads.

3) Execution:

a) Installation:

4) Installers of the PVC-coated galvanized rigid conduit system must be certified by the manufacturer and be able to present a valid, unexpired certified installer card prior to starting installation. All clamping, cutting, threading, bending, and assembly instructions given during the manufacturer's certified installation training should be vigorously followed.

B. Outlets, Pull and Junction Boxes:

1. Outlets:
   a. Each outlet in wiring or raceway systems shall be provided with an outlet box to suit conditions encountered. Boxes installed in normally wet locations or surface mounted shall be of the cast-metal type having hubs. Concealed boxes shall be cadmium plated or zinc coated sheet metal type. Old work boxes with Madison clamps not allowed in new construction. Thru the wall boxes are not permitted.
   b. Each box shall have sufficient volume to accommodate number of conductors in accordance with requirements of Code. Boxes shall not be less than 1-1/2" deep unless shallower boxes are required by structural conditions and are specifically approved by Architect. Ceiling and bracket outlet boxes shall not be less than 4" octagonal except that smaller boxes may be used where required by particular fixture to be installed. Flush or recessed fixtures shall be provided with separate junction boxes when required by fixture terminal temperature requirements. Switch and receptacle boxes shall be 4" square or of comparable volume.
   c. Far side box supports shall be Caddy J-1A.
   d. Acceptable manufacturers:
      Appleton
      Crouse Hinds
      Steel City
      RACO
      Or approved equal

2. Pull and Junction Boxes: Where indicated on plans, and where necessary to terminate, tap off, or redirect multiple raceway runs or to facilitate conductor installation, furnish, and install appropriately designed boxes. Boxes shall be fabricated from code gauge steel assembled with corrosion resistant machine screws. Box size shall be as required by Code.

3. Boxes in moist or wet areas shall be galvanized type. Boxes larger than 4-11/16 inches square shall have hinged covers. Boxes larger than 12 inches in one dimension will be allowed to have screw fastened covers, if a hinged cover would not be capable of being opened a full 90 degrees due to installation location.
   a. Acceptable Manufacturers:
      Brasch
      Hoffman
      Keystone
      Lee Products Co.
      McKinstry Inc.
      Eldon Inc.

2.03 CONDUCTORS

A. All conductors shall be a minimum size of #12 AWG except for control wiring and fire alarm wiring where #14 AWG may be used. For all exit sign circuits, normal/emergency and/or emergency only circuits, exterior lighting circuits, and also where distance from panelboard to first outlet exceeds 80 ft. at 120 volts and 150 ft. at 277 volts, #10 AWG shall be minimum size wire allowed. All feeder and branch circuit conductor shall be color coded as follows:

1.	208Y/120V	Phase A	Black
2.	208Y/120V	Phase B	Red
3.	208Y/120V	Phase C	Blue
4.	480Y/277V	Phase A	Brown
5.	480Y/277V	Phase B	Orange
6.	480Y/277V	Phase C	Yellow
7.	Grounded Conductor		
		120/208	White
		277/480	Grey
8.	Equipment Ground		
		120/208	Green
		277/480	Green with Yellow Trace
9.	Isolated Ground	120/208	Green with Orange Trace

B. All conductors not installed in accordance with color scheme shall be replaced. All conductors larger than #6 AWG must be identified with colored tape.

C. Comply with Rhode Island Electrical Code.

D. Comply with Underwriter's Laboratories (UL) standards:

1. UL 4: Armored Cable.
2. UL 62: Flexible Cord and Fixture Wire.
3. UL 83: Thermoplastic-Insulated Wires and Cables.
4. UL 486A: Wire Connectors and Soldering Lugs for Use with Copper Conductors.
5. UL1569: Metal -Clad Cables.

E. Comply with NEMA WC-5: Thermoplastic-Insulated Wire and Cable for the Transmission and Distribution of Electrical Energy.

F. Connections throughout the entire job shall be made with solderless type devices.

1. For #10 AWG and smaller: spring type.
2. For #8 AWG and larger: circumferential compression type.

3. Acceptable manufacturers:
   a. 3M "Scotchlock"
   b. IDEAL "Wingnut"
   c. BURNDY
   d. MAC
   e. Or equal

4. Any splices made up in ground mounted pull boxes shall be resin cast waterproof type or waterproof pressure type, as manufactured by King Technology, St. Louis, MO.

G. Conductors shall be copper, soft drawn, and annealed of 98 percent conductivity. Conductors larger than #10 AWG shall be stranded; #10 AWG and smaller shall be solid. Conductors shall be insulated for 600 volts and be of following types:

1. All conductors shall have heat/moisture resistant thermoplastic insulation type THHN/THWN (75 degrees C) except as follows:
   a. In sizes #1 AWG and larger: Crosslinked polyethylene insulation type XHHW (75 degrees C – 90 degrees C) may be used.

H. Acceptable manufacturers:

1. American Wire & Cable
2. Cerro
3. Cornish
4. Cresent
5. General Cable
6. Okonite
7. Or equal

I. Installation of conductors and cables

1. Install all power and 120 volt control wire and cable in approved raceways. When low tension wiring is run exposed, install it in conduit. Plenum rated low tension cable may be used for installation above suspended ceilings where it is allowed by the Code and is allowed in the specification for the specific system.
   a. Wire Size:

2. Install minimum No. 12 AWG for power and lighting circuits.
3. Install minimum No. 10 AWG for 120 volt 20 ampere branch circuits of 75 feet to 150 feet length, and minimum No. 8 AWG for the circuits of 150 feet to 250 feet unless otherwise shown on the drawings or required by the equipment shop drawings.
4. Install minimum No. 10 AWG for 277 volt 20 ampere branch circuits of more than 150 feet unless otherwise shown on the drawings.

5. Bundle conductors #10 and smaller in branch circuit panelboards, signal cabinets, signal control boards in switchboards and motor control centers.
6. Homerun Circuits:
   a. Follow homerun circuit numbers shown on the drawings to connect circuits to the panelboards. Where homerun circuit numbers are not shown on the drawings, divide similar types of connected loads among phase busses so that currents in each phase are within 10% of each other during normal usage.
   b. Wire multi-wire branch circuit homerun with two or three single phase and one common neutral conductor to a panel in a such manner that each phase circuit is fed from the adjacent circuit breakers. Do not combine circuits so that any homerun has more than three circuits (total of five wires) installed in one conduit, unless the circuit conductors are de-rated in strict accordance with the referenced Electrical Code.

7. Properly group feeders, branch circuit and auxiliary system wiring passing through pull boxes and/or being made up in panelboards; neatly bind each group of wires together with plastic cable ties, and trim loose ends of the ties.
8. Peel branch circuits and auxiliary system wiring out of the wiring gutters at the terminal cabinet and panels at 90 degrees to circuit breakers and terminal lugs before making connections.
9. Color code conductors No. 6 AWG and larger by applying colored plastic tape at ends and where connections and splices are made. Wrap tape around the conductor three complete turns.
10. Splices and Terminations:
    a. Make splices and joints by means of UL-listed, solderless connectors rated 600 volt, of sizes and types required by manufacturer's recommendations, with temperature ratings equal to that of wire.
    b. Attach copper wire to panelboards, switchboards, disconnect switches and other electrical equipment by means of bolt-on lugs with hex screws. Properly size lugs; do not cut strands from a conductor in order to fit conductor into a lug.
    c. Connectors for cables 250 MCM and larger shall have two clamping elements and terminals for bus connections shall have two bolt holes.

11. Identification: Identify and color-code conductors and cables according to Division 26 Section "Identification for Electrical Systems." Label feeder and branch circuits in pull and junction boxes, handholes and at cable terminations in the panelboards, motor control centers, and switchboards. Use non-ferrous tags or labels stamped or printed to correspond with markings on the drawings or marked so that feeder or cable may be identified readily. If suspended tags are provided, attach with nylon line or cable lacing.
12. Connect branch circuits to the breakers in multi-phase panelboards required to balance loads.
13. Provide handle ties for multiwire branch circuits as required in the NEC

14. Low Tension Cables: Provide separation from power wiring and lighting fixtures as follows:
    a. Lighting fixtures - at least 6 inches.
    b. Power branch circuit wiring with MC type cable - at least 12 inches.
    c. Power branch circuit wiring in metal conduit - at least 6 inches.

15. When low-tension cables are not in conduit or trays, support cables from the deck and/or beams, spacing supports no farther apart than 6 ft.-0 in. on center. Provide hangers, clips or other approved method of grouping the cables and keeping them away from other systems. Take care to ensure that ties, clips and other support devices do not compress the cable or damage cable insulation; use J-hooks whenever possible.
16. Cable Supports:
    a. Provide cable supports for vertical feeders required by the referenced Electrical Code.
    b. Support vertical feeders at each floor level.

17. Use manufacturer-approved pulling compound or lubricant where necessary; compound used must not deteriorate conductor or insulation. Do not exceed manufacturer's recommended maximum pulling tensions and sidewall pressure values.
18. Use pulling means, including fish tape, cable, rope, and basket-weave wire/cable grips, that will not damage cables or raceway.
19. For wiring in high temperature areas or high temperature equipment (i.e. boiler rooms, water heaters/boosters), furnish conductors for 90°C dry and wet rating.

2.04 SLEEVES, INSERTS, AND OPENINGS

A. Sleeves: Provide sleeves of proper sizes for all openings required in concrete floors and walls. Sleeves passing through floors shall be set with top of sleeve 1" above finished floor. Core drilling will also be acceptable if in accordance with any structural standards. Any unsleeved openings shall be waterproofed.

B. Inserts: Provide inserts or other anchoring devices in concrete and masonry construction as required to support raceways and equipment.

C. Openings: Where an opening is required in concrete slabs to allow passage of a multitude of raceways, give adequate notice to General Contractor so he may box out opening in form work.

D. Sleeves or openings through slabs for passage of future cables shall be located within 6 inches of walls and shall be in a single row and shall be proofed whether used or not.

E. Any openings through fire rated surfaces shall be closed off with fireproofing materials providing the same rating as the surface penetrated.

1. Acceptable Manufacturers:
   Specified Technologies Inc.
   Thomas & Betts
   International Protective Coatings Corp.
   3M Fire Protection Products
   Dow Corning
   Or approved equal

2.05 WIRING DEVICES

A. Manufacturers:

1. Manufacturers' Names: Shortened versions (shown in parentheses) of the following manufacturers' names are used in other Part 2 articles:
   a. Cooper Wiring Devices.
   b. Hubbell.
   c. Leviton.
   d. Pass & Seymour.
   e. Or equal

B. Straight Blade Receptacles:

1. Duplex Receptacles: Comply with NEMA WD 1, NEMA WD 6 configuration NEMA5-20R, UL 498 and FS W-C-596. Specification grade industrial series, straight-blade, 2 pole 3 wire grounding type, back and side wired, nylon face, rated for 120 volts, 20 amperes. Hubbell No.5362 or equal. Hubbell No.5362WR or equal for weather-resistant listed receptacles. Receptacles that are controlled by an automatic control device shall be marked per NEC with the international power symbol. Provide as indicated on the drawings with one controlled face and split circuit hot tab equal to Hubbell BR20C1 series.
2. Ground fault interrupter (GFI) receptacles: Duplex receptacles conforming to UL 943, specification grade heavy duty, feed-through type, rated for 120 volt, 20 amperes, NEMA 5-20R, GFI Class "A" with a sensitivity to leakage 5 milliamps, weather-resistant and tamper-resistant listed. Hubbell No. GF20LA or equal.
3. Transient-Voltage Surge-Suppressor (TVSS) Receptacles: Duplex type, NEMA 5-20R configuration, with integral transient-voltage surge protection in a minimum of 3 modes: line-to-ground, line-to-neutral, and neutral-to-ground; listed as complying with UL 1449. Hubbell HBL5362SA or equal.

4. Tamper-Resistant Convenience Receptacles, 125 V, 20 A: Specification grade, straight-blade, 2 pole 3 wire grounding type, back and side wired. Comply with NEMA WD 1, NEMA WD 6 configuration 5-20R, and UL 498. Listed as tamper-resistant with "T" marking. Hubbell BR20TR or equal.
    a. Equal manufacturers
        1) RACO
        2) Hubbell
        3) Or equal

C. Hazardous (Classified) Location Receptacles:

1. Wiring Devices for Hazardous (Classified) Locations: Comply with NEMA FB 11 and UL 1010.
    a. Manufacturers: Subject to compliance with requirements, provide products by one of the following:
        1) Cooper Crouse-Hinds.
        2) Appleton Electric.
        3) Hubbell.
        4) KH Industries.
        5) Or equal

D. Twist-Locking Receptacles:

1. Single Convenience Receptacles, 125 V and 250 V, 20 A: Comply with NEMA WD 1, NEMA WD6 and UL 498. Hubbell HBL2310 (L5-20R), HBL2320 (L6-20R), or equal.

E. Snap Switches:

1. Comply with NEMA WD 1 and UL 20.
2. Switches, heavy duty, side wired, 120/277V, 20A:
3. Products: Subject to compliance with requirements, provide one of the following:
    a. Cooper; 2221 (single pole), 2222 (two pole), 2223 (three way).
    b. Hubbell; C1221 (single pole), C1222 (two pole), C1223 (three way).
    c. Leviton; 1221-2 (single pole), 1222-2 (two pole), 1223-2 (three way).
    d. Pass & Seymour; 20AC1 (single pole), 20AC2 (two pole), 20AC3 (three way).

F. Securely fasten wiring devices in place, plumb, level, and true to finished lines and surfaces.

G. Device Plates: Do not use oversized or extra-deep plates. Repair wall finishes and remount outlet boxes when standard device plates do not fit flush or do not cover rough wall opening.

H. Provide gaskets on all wiring device plates where devices are on walls separating conditioned and non-conditioned spaces and exterior walls.

I. Composition material of wiring devices to be nylon with ivory finish. Outlets intended for computer use shall be grey finish, outlets on emergency shall be red finish.

J. Wall Plates:

1. Single and combination types to match corresponding wiring devices.
   a. Plate-Securing Screws: Metal with head color to match plate finish.
   b. Material for Finished Spaces: White- finish Type 302 stainless steel.
   c. Material for Finished Spaces installed in concrete: Satin-finished Type 302 stainless steel.
   d. Material for Unfinished Spaces: Galvanized steel**.**
   e. Material for Damp Locations: Cast aluminum with spring-loaded lift cover, and listed and labeled for use in "wet locations."

2. Wet-Location, Weatherproof Cover Plates: NEMA 250, complying with type 3R weather-resistant**,** die-cast aluminum.

K. Finishes:

1. Color: Wiring device catalog numbers as specified do not designate device color.
   a. Wiring Devices Connected to Normal Power System: Grey for computer circuits white for convenience receptacles other devices as selected by Architect, unless otherwise indicated or required by referenced Electrical Code or device listing.
   b. Wiring Devices Connected to Emergency Power System: Red.
   c. Isolated-Ground Receptacles: Orange.

2.06 GROUNDING SYSTEM

A. All equipment and systems shall be grounded. Refer especially to NEC Section 250 Requiring Connections to Building Steel, Foundation, Water Service, and Interior Piping. Provide transformer pad grounding in accordance with utility company standards.

B. The grounded conductor shall be supplemented by an equipment grounding system.

C. The equipment grounding system shall be installed so all conductive items in close proximity to electrical circuits operate continuously at ground potential and provide a low impedance path for ground fault currents.

D. Grounding conductors shall be so installed as to permit shortest and most direct path to ground.

E. Maximum measured resistance to ground of 5.0 ohms shall not be exceeded. Ground separately derived systems (dry type transformers) in accordance with Article 250-30 by grounding neutral to transformer ground lug and providing insulated grounding electrode conductor to nearest effectively grounded building steel or, if unavailable, to nearest available effectively grounded metal water pipe.

F. Equipment grounding conductors and straps shall be sized in compliance with Code Table 250-122.

G. Grounding conductors shall be insulated with green color. Grounding conductors for use on isolated ground receptacles shall be green with trace color to differentiate between normal ground conductors.

H. Branch circuits shall consist of phase and grounded conductor installed in common metallic raceway. All receptacle circuits shall have dedicated neutrals. All circuits shall have a separate insulated grounding conductor installed. Any flexible cable system or non-metallic raceway system shall have an insulated grounding conductor. Any cable system for use on isolated ground circuits shall have both an isolated ground conductor as well as an equipment ground conductor, both of which shall be insulated.

I. Each electrical expansion fitting shall be furnished with a bonding jumper. Provide grounding bushings and ground connections for all raceways terminating below equipment where there is no metal-to-metal continuity.

J. Continuity between all metallic and nonmetallic raceway systems and equipment shall be maintained.

K. Outdoor lighting fixtures shall be grounded and bonded in common with building system via a separate grounding conductor.

L. Grounding Conductors: Route along shortest and straightest paths possible, unless otherwise indicated or required by Code. Avoid obstructing access or placing conductors where they may be subjected to strain, impact, or damage.

M. Ground Rods: Drive rods until tops at least 6 inches below finished floor or final grade, unless otherwise indicated. Interconnect ground rods with grounding electrode conductor below grade.

N. Dry type transformer: Install an insulated grounding conductor from a transformer neutral to the building steel by means of copper wire, as scheduled on the drawings.

O. Grounding and Bonding for Piping:

1. Metal Water Service Pipe: Install insulated copper grounding conductors in conduit, from a grounding bus of the building's main service equipment to main metal water service entrances to building. Connect grounding conductors to main metal water service pipes using a bolted clamp connector or by bolting a lug-type connector to a pipe flange, using one of the lug bolts of the flange. Where a dielectric main water fitting is installed, connect grounding conductor on street side of fitting. Bond metal grounding conductor conduit or sleeve to conductor at each end.
2. Water Meter Piping: Use braided-type bonding jumpers to electrically bypass water meters. Connect to pipe with a bolted connector.
3. Bond each aboveground portion of gas piping system downstream from equipment shutoff valve.

2.07 UNDERGROUND DUCTBANKS

A. General: Furnish and install the ductbanks as herein specified and as shown on drawings.

B. Division of Work:

1. The Site Contractor shall be responsible for the work and material required for the following:
   a. Excavation
   b. Backfill
   c. Furnish and Installation of precast handholes/manholes.
   d. Brick or concrete collars to bring handhole frames and covers up to grade. Installation of frames and collars which are to be furnished by the General Contractor.
   e. Concrete Encasement

2. All other material, equipment, and labor required for the complete ductbank shall be furnished and installed by the Electrical Sub-Contractor under this Section, including the following:
   a. Service raceways.
   b. Grounding material.
   c. Ductbank warning tape.
   d. Conduit spacers.

C. Materials:

1. Conduit: UL listed, schedule 40 PVC in accordance with NEMA standard TC-2.
2. See BASIC MATERIALS SECTION.

3. Conduit Supports (duct system): Shall be molded plastic with interlocking lugs and skeletonized structure, minimum separation 3".
4. Tags: Non-ferrous metal or fibre, 1/4" high letters.
5. Warning tape shall be yellow polyethylene 4 mil thick, 6" wide terratape, similar to REEF Industries, Houston, Texas and shall be installed above all ductbanks both high and low tension per NEC.
6. Installation of Underground nonmetallic raceways shall be in accordance with NEMA Standards Publication TCB-2-2017.

D. Duct System:

1. The duct system shall consist of Schedule 40 PVC conduit except where otherwise specified. The size and number of conduits shall be as indicated on the drawings. Provide a pull wire in each conduit.
2. The entire length between handholes and end of ductbank shall be excavated and graded before any conduit is laid.
3. The ductbank shall be set on undisturbed earth.
4. The conduit shall be installed so that top is a minimum of 36" below finished grade unless otherwise indicated, and shall be laid to a minimum grade of 4" for each 100 feet of length. Duct system shall drain to manholes/handholes.
5. Changes in direction shall be made by long sweep bends, minimum radius 25 feet except that at the end of a run, within 10 feet of termination. Manufactured ends may be used having a minimum radius of 36 inches.
6. Conduit base and intermediate spacers shall be installed a maximum of 5 feet on centers. Spacers shall not be placed one above the other, but shall be staggered a minimum of 6".
7. All conduit joints shall be made watertight by means of a sealing compound before the coupling is installed. Joints in conduit shall be staggered, minimum space between joints in adjacent conduit shall be 6 inches.
8. When the required number of conduits has been installed, securely tie the assembly together at distances not exceeding 7 feet. Tie shall consist of three (3) turns of No. 18 iron wire. Separate ties required for low tension and high tension conduit runs.
9. Duct envelope shall be vibrated to eliminate voids.
10. Ductbanks shall not be covered until the conduit installation has been observed by the utility company and engineer.
11. Warning tape shall be installed during backfilling and shall be placed approximately 12" above the conduits.
12. After the installation is completed, each conduit shall be cleaned and identified. A standard flexible mandrel and a stiff bristle brush shall be pulled through each conduit. The mandrel shall not be less than 12" long and the diameter approximately ¼" less than the conduit.

2.08 SEALS

A. Water Tight Seals:

1. Conduits entering from the exterior or below grade shall have water tight fittings on the outside and on the inside of the conduit.
   a. Fittings on the outside of the conduit shall be O-Z Gedney type FSK or approved equal. Provide type WSK if penetration is within two feet of the high water table. Provide grounding attachment.
   b. Fittings on the inside of the conduit shall be O-Z Gedney type CSBI or approved equal. Provide type CSBG if penetration is within two feet of the high water table. Provide a blank fitting to seal spare or empty conduits.
   c. O-Z Gedney type CSM fitting may be used when sealing within a sleeve or cored hole.

2. Submit on seals to be used.

B. Environmental Seals:

1. Provide seals on raceways exposed to widely different temperatures, as in refrigerating or cold storage areas. Install seal to prevent circulation of air from warmer to colder sections through the raceway.

C. Hazardous Area Seals:

1. Provide explosion proof seals required by the Electric Code for the following areas.
   a. Explosion proof exhaust fans.

D. Smoke and Fire Stopping Seals:

1. All work shall be in accordance with the requirements of Section 078400.

2.09 CIRCUIT BREAKERS IN EXISTING MOTOR CONTROL CENTER

A. Type. Provide molded case circuit breaker combination starter type

B. Circuit Breakers

1. Provide circuit breaker combination starters with three pole magnetic only motor circuit protectors specifically designed for motor circuit protection in accordance with NEC.
2. Provide branch feeder circuit breakers of three pole thermal magnetic molded case type with frame size and trip ratings as specified, and having minimum interrupting capacity of 25,000 amperes rms symmetrical or higher required.

C. Mounting

1. Provide units mounted on unit support pan or in bucket type housing.
2. Provide units of either tilt and lift-out or drawout type utilizing rails in order that rearrangement of relocation of individual units can be readily accomplished.

D. Manual Motor Starters

1. Provide quick-make, quick-break, toggle switch type, with thermal alloy type overload protection. Use manual motor starters for single-phase motors rated less than 1/2 horsepower.
2. Toggle Switch Operator: Provide operator guarded and equipped with a red indicating light to show when the switch is in the closed position.

E. Magnetic Motor Starters

1. Provide full voltage, across-the-line reversing or non-reversing type as required rated for design load requirements, sized to conform with standard NEMA ratings for given horsepower, except minimum size shall be NEMA size 1, and designed for use on nominal 480 volt, three phase, 60 Hertz service unless specified otherwise in the Construction Specifications; with 120 volt control circuits; minimum three thermal type ambient compensated as indicated, manual reset, overload relays for motor protection; tow convertible auxiliary contacts with provision for field mounting of minimum two future auxiliary contacts; red, green, and amber indicated, and hands-off-automatic switch where automatically controlled, as indicated. Additionally, provide indicating lights, push-button, and selector switches with legend plates.
2. Provide overload relays selected, and sized, based on actual full load amperes of particular motor. Additionally, heaters shall be applied in conformity with NEC and manufacturer's recommendations.
3. Provide fuse control transformers for magnetic starters in the primary circuit.

PART 3 - EXECUTION

3.01 WORK COORDINATION AND JOB OPERATIONS

A. Equipment shall not be installed in congested and possible problem areas without first coordinating installation of same with other trades. Relocate electrical equipment installed in congested or problem areas should it interfere with the proper installation of equipment to be installed by other trades.

B. Furnish to contractors information relative to portions of electrical installation that will affect other trades sufficiently in advance so that they may plan their work and installation.

C. Obtain from other trades information relative to electrical work which he, this contractor, is to execute in conjunction with installation of other trades' equipment.

3.02 PLANS AND SPECIFICATIONS

A. Plans:

1. Drawings showing layout of electrical systems indicate approximate location of raceways, outlets and apparatus. Runs of feeders and branch circuits are schematic and are not intended to show exact routing. Final determination as to routing shall be governed by structural conditions and other obstructions.

B. Specifications:

1. Specifications supplement drawings and provide specifics pertaining to methods and material to be used.

3.03 IDENTIFICATION

A. Equipment shall be marked for ease of identification as follows:

1. Provide screw-on nameplates on switchboards, panelboards, starters, and disconnect switches. Nameplates to be of black phenolic with white engraving. For starters and disconnect switches lettering shall be minimum of ¼ in. high. Nameplates on panelboards shall have the following information.
   a. Line 1 - Panel designation in ½ in. high letters.
   b. Line 2 - Utilization voltage in 3/8 in. high letters.
   c. Line 3 - Distribution source "Fed from ¼ in. high letters.

2. Neatly typed directory cards listing circuit designations shall be fastened inside the cover of panelboards. Spare circuits shall be penciled.
3. Color coding schedules. If there is more than a single system voltage, different voltages shall have separate color codes, as previously specified. A copy of the color code schedule shall be affixed to each secondary switchboard and distribution panel and shall be of the phenolic nameplate type as previously specified. A typewritten color code schedule shall also be affixed, under plastic, inside each panelboard door.
4. Outlet boxes both concealed and exposed shall be identified as to panel origination and circuit number by means of fibre pen on the inside of coverplate.
5. Wiring device plates on devices connected to normal-emergency circuits shall be red in color.
6. All conductors in boxes larger than standard outlet boxes, in all wireways, and trench headers. shall be grouped logically and be identified.
7. Grounding conductors and neutrals shall be labeled in panels, and wireways. as to circuits associated with.
8. Emergency system wiring shall comply with 700.10(A).

9. Power and raceway identification:
    a. Comply with ANSI A13.1 for minimum size of letters for legend and for minimum length of color field for each raceway size.
    b. Colors for Raceways Carrying Circuits at 600 V or Less:
    c. Black letters on an orange field.
    d. Legend: Indicate voltage and system or service type (Power, Lighting, Emergency, Control).
    e. Colors for Raceways Carrying Circuits at More Than 600 V:
    f. Black letters on an orange field.
    g. Legend: "DANGER CONCEALED HIGH VOLTAGE WIRING" with 3-inch-high letters.
    h. Self-Adhesive Vinyl Labels for Raceways Carrying Circuits at 600 V or Less: Preprinted, flexible label laminated with a clear, weather- and chemical-resistant coating and matching wraparound adhesive tape for securing ends of legend label.
    i. Tape and Stencil for Raceways Carrying Circuits More Than 600 V: 4-inch-wide black stripes on 10-inch centers diagonally over orange background that extends full length of raceway. Stop stripes at legends.
    j. Metal Tags: Brass or aluminum, 2 by 2 by 0.05 inch, with stamped legend, punched for use with self-locking cable tie fastener.
    k. Write-On Tags: Polyester tag, with corrosion-resistant grommet and cable tie for attachment to conductor or cable. Marker for Tags: Permanent, waterproof, black ink marker recommended by tag manufacturer.

10. Power and Control Cable identification:
    a. Comply with ANSI A13.1 for minimum size of letters for legend and for minimum length of color field for each raceway and cable size.
    b. Self-Adhesive Vinyl Labels: Preprinted, flexible label laminated with a clear, weather- and chemical-resistant coating and matching wraparound adhesive tape for securing ends of legend label.
    c. Metal Tags: Brass or aluminum, 2 by 2 by 0.05 inch, with stamped legend, punched for use with self-locking cable tie fastener.
    d. Write-On Tags: Polyester tag, with corrosion-resistant grommet and cable tie for attachment to conductor or cable. Marker for Tags: Permanent, waterproof, black ink marker recommended by tag manufacturer.
    e. Snap-Around Labels: Slit, pretensioned, flexible, preprinted, color-coded acrylic sleeve, with diameter sized to suit diameter of raceway or cable it identifies and to stay in place by gripping action.

11. Conductor Identification materials:
    a. Color-Coding Conductor Tape: Colored, self-adhesive vinyl tape not less than 3 mils thick by 1 to 2 inches wide.
    b. Self-Adhesive Vinyl Labels: Preprinted, flexible label laminated with a clear, weather- and chemical-resistant coating and matching wraparound adhesive tape for securing ends of legend label.

c. Snap-Around Labels: Slit, pretensioned, flexible, preprinted, color-coded acrylic sleeve, with diameter sized to suit diameter of raceway or cable it identifies and to stay in place by gripping action.
d. Marker Tapes: Vinyl or vinyl-cloth, self-adhesive wraparound type, with circuit identification legend machine printed by thermal transfer or equivalent process.
e. Write-On Tags: Polyester tag, with corrosion-resistant grommet and cable tie for attachment to conductor or cable. Marker for Tags: Permanent, waterproof, black ink marker recommended by tag manufacturer.

12. Underground warning tape:
    a. Recommended by manufacturer for the method of installation and suitable to identify and locate underground electrical and communications utility lines but not less than 4 mils thick and 6 inches wide.
    b. Printing on tape shall be permanent and shall not be damaged by direct-burial service.
    c. Tape material and ink shall be chemically inert, and not subject to degrading when exposed to acids, alkalis, and other destructive substances commonly found in soils.
    d. Color and Printing:

13. Comply with ANSI Z535.1 through ANSI Z535.5.
14. Inscriptions for Red-Colored Tapes: ELECTRIC LINE, HIGH VOLTAGE.
15. Inscriptions for Orange-Colored Tapes: TELEPHONE CABLE, CATV CABLE, COMMUNICATIONS CABLE, OPTICAL FIBER CABLE.
16. Warning labels and signs:
    a. Self-Adhesive Warning Labels: Factory-printed, multicolor, pressure-sensitive adhesive labels, configured for display on front cover, door, or other access to equipment unless otherwise indicated.
    b. Baked-Enamel Warning Signs:
    c. Preprinted aluminum signs, punched or drilled for fasteners, with colors, legend, and size required for application. Nominal size, 7 by 10 inches.
    d. Metal-Backed, Butyrate Warning Signs:
    e. Weather-resistant signs, non-fading, preprinted, cellulose-acetate butyrate signs with galvanized-steel backing; and with colors, legend, and size required for application. Nominal size 10 by14 inches.
    f. Safety signs shall warn of potential electrical hazard and shall include, but are not limited to, the following legends:
    g. Multiple power source warning.
    h. Workspace clearance warning.
    i. Potential electric arc flash hazard.

17. Equipment identification labels:
    a. Adhesive Film Label: Machine printed, in black, by thermal transfer or equivalent process. Minimum letter height shall be 3/8 inch.

b. Adhesive Film Label with Clear Protective Overlay: Machine printed, in black, by thermal transfer or equivalent process. Minimum letter height shall be 3/8 inch. Overlay shall provide a weatherproof and UV-resistant seal for label.
c. Engraved, Laminated Acrylic or Melamine Label: Punched or drilled for screw mounting. White letters on a dark-gray background. Minimum letter height shall be 3/8 inch.

18. Cable ties:
    a. General-Purpose Cable Ties: Fungus inert, self-extinguishing, one piece, self-locking, Type 6/6 nylon.
    b. Minimum Width: 3/16 inch.
    c. Color: Black except where used for color-coding.
    d. UV-Stabilized Cable Ties: Fungus inert, designed for continuous exposure to exterior sunlight, self-extinguishing, one piece, self-locking, Type 6/6 nylon.
    e. Plenum-Rated Cable Ties: Self-extinguishing, UV stabilized, one piece, self-locking. UL 94 Flame Rated.

19. Verify identity of each item before installing identification products. Coordinate names, abbreviations, colors, and other designations used in electrical identification work with corresponding designations specified or indicated. Install numbers, lettering, and colors as approved in submittals and required by code.
20. Location: Install identification materials and devices at locations for most convenient viewing without interference with operation and maintenance of equipment.
21. Apply identification devices to surfaces that require finish after completing finish work.
22. Self-Adhesive Identification Products: Clean surfaces before application, using materials and methods recommended by manufacturer of identification device.
23. Attach signs and plastic labels that are not self-adhesive type with mechanical fasteners appropriate to the location and substrate.
24. System Identification Color-Coding Bands for Raceways and Cables: Each color-coding band shall completely encircle cable or conduit. Place adjacent bands of two-color markings in contact, side by side. Locate bands at changes in direction, at penetrations of walls and floors, at 50-foot maximum intervals in straight runs, and at 25-foot maximum intervals in congested areas.
25. Aluminum Wraparound Marker Labels and Metal Tags: Secure tight to surface of conductor or cable at a location with high visibility and accessibility.
26. Cable Ties: For attaching tags. Use general-purpose type, except as listed below:
27. Outdoors: UV-stabilized nylon.
28. Underground-Line Warning Tape: During backfilling of trenches install continuous underground-line warning tape directly above line at 6 to 8 inches below finished grade. Use multiple tapes where width of multiple lines installed in a common trench or concrete envelope exceeds 16 inches overall.

29. Renovation Projects: For alterations and additions to existing facilities, use existing identification system. Where systems have not been standardized, use the identifying and marking system specified in this standard.
30. Distribution Equipment: Identify major components of the distribution system (such as circuit breakers, switches, transformers, switchboards, panelboards, motor control centers) with nameplates. Nameplates on disconnect switches and control stations shall identify the equipment served.
31. Identification Schedule:
    a. Accessible Raceways and Metal-Clad Cables, 600 V or Less, for service, feeder, and branch circuits more than 30A and 120V to ground: Identify with self-adhesive vinyl label applied at 10-foot maximum intervals.
    b. Power-Circuit Conductor Identification, 600 V or Less: Identify conductors in the panels, pull and junction boxes, manholes, handholes.

32. Color-Coding for Phase and Voltage Level Identification, 600 V or Less: Use colors for ungrounded service, feeder and branch-circuit conductors as specified in Division 26 Section "Low-Voltage Power Conductors".
    a. Factory applied continuous color coding for conductors No.8 AWG and smaller.
    b. Field-applied, color coding conductor tape: For conductors No.6 AWG and larger. Apply in half-lapped turns for a minimum distance of 6 inches from terminal points and in boxes where splices or taps are made.

33. Outlet Boxes: Identify with the panel and circuit number.
    a. Power-Circuit Conductor Identification, above 600 V: For conductors in the vaults, pull and junction boxes, manholes and handholes, use write-on tags.
    b. Auxiliary Electrical Systems Conductor Identification: Identify field-installed alarm, control, and signal connections.
    c. Identify conductors, cables, and terminals in enclosures and at junctions, terminals, and pull points. Identify by system and circuit designation.
    d. Terminal Blocks: Attach numbered nameplates to terminal blocks which require identification numbers; use the designations shown on the wiring diagrams. Install nameplate at the top of vertically mounted terminal blocks and at the end of horizontally mounted terminal blocks. Indicate the individual terminal point designation shown on the wiring diagrams.
    e. Use system of marker tape designations that is uniform and consistent with system used by manufacturer for factory-installed connections.
    f. Workspace Indication: Install floor marking tape to show working clearances in the direction of access to live parts. Workspace shall be as required by NFPA 70 unless otherwise indicated. Do not install at flush-mounted panelboards and similar equipment in the finished spaces.

g. Warning Labels for Indoor Cabinets, Boxes, and Enclosures for Power and Lighting: Apply warning, caution, and instruction signs where required by the referenced Electrical code, or where reasonably required to assure safe operation and maintenance of electrical systems and of the items to which they connect. Install self-adhesive warning labels or baked-enamel warning signs with approved legend where instructions or explanations are needed for system or equipment operation. Install metal-backed, butyrate warning signs for outdoor items.

h. Emergency Operating Instruction Signs: Install instruction signs with white legend on a red background with minimum 3/8-inch high letters for emergency instructions at equipment used for power transfer, load shedding and other emergency operations.

i. Safety sign for the switchboards and panelboards: Provide a sign to warn qualified persons of potential electric arc flash hazard.

j. All electrical distribution equipment and mechanical/plumbing/fire protection equipment fed from the electrical distribution system shall contain in addition to the identification requirements listed in this section shall be labelled where they are fed from. For example Distribution panel 4DP1A is fed from MSB-1A, its label shall be “4DP1A fed from MSB-1A” submit full labeling scheme for review and approval.

k. Equipment Identification Labels: On each unit of equipment, install unique designation label that is consistent with wiring diagrams, schedules, and the Operation and Maintenance Manual. Apply labels to the disconnect switches and protection equipment, control panels, control stations, terminal cabinets, and racks of each system. Systems include power, lighting, control, communication, signal, monitoring, and alarm systems unless equipment is provided with its own identification.

34. Labeling Instructions:
    a. Indoor Equipment: Self-adhesive, laminated acrylic or melamine label.
    b. Outdoor Equipment: Engraved, laminated acrylic.
    c. Unless provided with self-adhesive means of attachment, fasten labels with appropriate mechanical fasteners that do not change the NEMA or NRTL rating of the enclosure.

35. Panelboards: Typewritten directory of circuits in the location provided by panelboard manufacturer. Panelboard identification shall be engraved laminated acrylic. Panelboard directories shall identify the load name and location (i.e. AHU-1, Room #, FCU-1, Room #).

3.04 PROTECTION AND CLEANUP

A. Protection:

1. Materials and equipment shall be suitably stored and protected from weather.

2. During progress of work, pipe and equipment openings shall be temporarily closed so as to prevent obstruction and damage.
3. Be responsible for maintenance and protection of material and equipment until final acceptance.

B. Cleanup:

1. Keep job site free from accumulation of waste material and rubbish. Remove all rubbish, construction equipment, and surplus materials from site and leave premises in a clean condition.
2. At completion, equipment with factory finished surfaces shall be cleaned and damaged spots touched up with the same type paint applied at factory.
3. Particular attention is called to Section 110-12(c) of the NEC, which requires that internal parts of electrical equipment not be contaminated by construction operations.

3.05 PORTABLE OR DETACHABLE PARTS

A. Retain possession of and be responsible for spare parts, portable and detachable parts, and other removable portions of installation including fuses, keys, locks, blocking clips, inserts, lamps, instructions, drawings, and other devices or materials that are relative to and necessary for proper operation and maintenance of the system until final acceptance, at which time such parts shall be installed or turned over to the Owner, as the case may be.

3.06 SAFETY PRECAUTIONS

A. Provide proper guards, signage, and other necessary construction required for prevention of accidents and to insure safety of life and property. Remove any temporary safety precautions at completion.

3.07 WORKMANSHIP AND INSTALLATION METHODS

A. Work shall be installed in first-class manner consistent with best current trade practices. Equipment shall be securely installed plumb and/or level. Flush-mounted outlet boxes shall have front edge flush with finished wall surface. No electrical equipment shall be supported by work of other trades. Cable systems shall be supported and not draped over ducts and piping or laid on ceiling suspension members.

B. Supports:

1. Support work in accordance with best industry practice and by use of standard fittings.
2. In general, walls and partitions will not be suitable for supporting weight of panelboards, dry type transformers and the like. Provide supporting frames or racks extending from floor slab to structure above.

3. Provide supporting frames or racks for equipment, intended for vertical surface mounting in free standing position where no walls exist.
4. Supporting frames or racks shall be of standard angle, standard channel or specialty support system steel members, rigidly bolted or welded together and adequately braced to form a substantial structure. Racks shall be of ample size to assure a workmanlike arrangement of equipment.
5. Provide 3/4 in. thick painted plywood mounting surfaces in all electric areas and for all equipment on free standing racks. All plywood shall be fire retardant and painted both sides and edges with 2 coats of white paint.
6. No work for exposed installations in damp locations shall be mounted directly on any building surface. In such locations, flat bar members or spacers shall be used to create a minimum of ¼ in. air space between building surfaces and work.
7. Nothing (including outlet, pull and junction boxes and fittings) shall depend on electric raceways or cables for support. All outlet, pull, and junction boxes shall be independently supported.
8. Nothing shall rest on, or depend for support on, suspended ceiling or its mounting members.
9. Provide channel sills or skids for leveling and support of all floor mounted electrical equipment.
10. Where permitted loading is exceeded by direct application of electrical equipment to a slab or deck, provide proper dunnage to distribute the weight in a safe manner.
11. Support metallic raceways by either running within steel frame or hung from the building frame. Anything hung from building frame shall be attached with metallic fasteners.

C. Fastenings:

1. Fasten electric work to building structure in accordance with the best industry practice.
2. Where weight applied to attachment points is 100 pounds or less, fasten to building elements of:
   a. Wood -- with wood screws.
   b. Concrete and solid masonry -- with bolts and expansion shields.
   c. Hollow construction -- with toggle bolts.
   d. Solid metal -- with machine screws in tapped holes or with welded studs.

3. Where weight applied to attachment points exceeds 100 pounds, fasten as follows:
   a. At field poured concrete slabs, provide inserts with 18 in. minimum length slip-through steel rods, set transverse to reinforcing steel.
   b. Where building is steel framed, utilize suitable auxiliary channel or angle iron bridging between structural steel elements to establish fastening points. Bridging members shall be suitably welded or clamped to building steel. Provide threaded rods or bolts to attach to bridging members.

4. Floor mounted equipment shall not be held in place solely by its own dead weight. Provide floor anchor fastenings. Floor mounted equipment over 72 inches in height shall also be braced to nearest wall or overhead structural elements.
5. For items which are shown as being mounted at locations where fastenings to the building construction element above is not possible, provide suitable auxiliary channel or angle iron bridging to building structural elements.
6. Fastenings for metallic raceways using the fastening as support shall be of the metallic type. Fastenings to hold raceways or cables in place may be via traps.

D. General Raceway Installation:

1. Install the various types of raceways in permitted locations as previously specified. All raceways shall be run concealed. Consult Architect for instruction for raceways which must be exposed in public spaces.
2. Raceways for normal emergency or emergency only wiring cannot contain other conductors.
3. Raceways shall be properly aligned, grouped, and supported in accordance with code. Exposed raceways shall be installed at right angles to or parallel with structural members. Concealed raceways may take most direct route between outlets.
4. Raceways run on trapeze hangers shall be secured to the trapeze.
5. Raceways shall be continuous and shall enter and be secured to all boxes in such a manner that each system shall be electrically continuous from service to all outlets. Provide grounding bushings and bonding jumpers where raceways attach to painted enclosures or terminate below equipment.
6. Where raceways enter boxes, cabinets, tap boxes, other than those having threaded hubs, a standard locknut shall be used on the outside and locknut and bushing on the inside.
7. Where raceways terminate below equipment and there is no direct metal to metal continuity, provide grounding bushings on raceways and interconnect with equipment grounding conductor.
8. All empty raceways shall be provided with a pull wire.
9. All raceway sleeves, stub-ups, or stub-outs, where not connected to a box or cabinet, shall be terminated with a bushing.
10. All raceway joints shall be made up tight and no running threads will be permitted.
11. Where raceways are cut, the inside edge shall be reamed smooth to prevent injury to conductors.
12. All vertical raceways passing through floor slabs shall be supported.
13. Raceways shall not be installed in concrete slabs above grade or below waterproofed slabs.

14. Electric raceways and/or sleeves passing through floors or walls shall be of such size and in such location as not to impair strength of construction. Where raceways alter structural strength or the installation is questionable, the structural engineer shall be contacted for approval.
15. Raceways shall not run directly above or below heat producing apparatus such as boilers, nor shall raceways run parallel within 6 inches of heated pipes. Raceways crossing heated pipes shall maintain at least a 1 inch space from them.
16. Raceways shall be installed in such a manner as to prevent collection of trapped condensates, and all runs shall be arranged to drain.
17. Raceways passing between refrigerated and non-refrigerated spaces and those penetrating enclosures with air movement shall be provided with seals.
18. Raceways feeding fire and jockey pumps shall be rigid metal conduit either run below slab or inside 2 hour rated enclosure. Final connections to motors shall be liquidtite flexible conduit.
19. Where two alternate wiring methods interconnect such as EMT to flexible metal conduit, an outlet box shall be provided.
20. All empty raceways entering building and all sleeves or core drilled openings through floors shall be sealed.
21. Each exterior raceway or assembly in a ductbank shall be provided with continuous warning tape installed 12 inches above raceway or ductbank.
22. Underground rigid non-metallic raceways where allowed and run as a ductbank encased in concrete shall be installed with plastic spacers to ensure a separation of 3 inches between raceways. Top of ductbanks shall be 30 inches below grade, unless otherwise detailed.
23. Elbows and extensions of rigid non-metallic raceway systems which penetrate slabs shall be rigid or intermediate metal conduit.
24. Raceways used for transformer connections shall be flexible type and shall contain a grounding conductor.
25. Raceways entering building through foundation wall into a basement area shall be provided with wall entrance seals or with other acceptable waterproofing method.
26. Underground non-metallic raceways shall be fully surrounded by a selected backfill to prevent more than the desired deflection and, in power raceways is needed to provide room for heat dissipation and good compaction of backfill. Separation Between Direct-Buried, Non-encased Ducts: 3 inches minimum for like services, and 12 inches minimum between power and signal ducts, unless shown otherwise on the drawings. Raceways formation for non-encased ducts shall be built up layer by layer. After each layer is placed, the selected backfill shall be placed over it to the specified depth. This fill should be spread evenly and compacted to provide continuous support for the next tier of raceways. Any temporary spacers used should be removed from each layer of raceway as soon as backfill is completed in that layer. A maximum of 9 conduits shall be grouped in the same trench unless otherwise noted on the drawings.
27. Comply with NECA 1 for installation requirements applicable to products specified in Part 2 except where requirements on Drawings or in this Article are stricter.

28. Run conduit concealed in finished areas above suspended ceilings, in wall spaces. Exposed conduit runs in finished areas require Architect's approval. Properly group conduit runs. Install conduit parallel to walls, structure and ceilings, and support with proper hangers and clamps. Running conduits at the bottom of structural members in exposed conditions is not allowed. Check door swings before installing back boxes for switches and receptacles.
29. Where conduit passes through a building expansion joint, use weatherproof, telescopic type expansion fittings which permit at least 4 inches of movement.
30. Form bends in conduit by means of a conduit bending machine or by an approved hickey. To fasten conduit to outlet boxes, cabinets, use locknuts and insulated throat bushings of compatible material.
31. Cut conduit ends square, thread conduit, and ream to remove burrs and sharp edges. Field threads shall be of the same type and have the same effective length as factory cut threads. Turns, wherever required in exposed conduit runs, shall be made by the use of factory-made bends, or field-made bends that meet the requirements of this Section and Electric Code. In the event of a multiplicity of conduits making the same turn, a steel junction box with a removable steel cover may be used. Offsets and bends for changes in elevation of exposed conduit runs shall be made at walls or beams and not in open spaces between walls or beams. Rout conduits required to avoid interfere with the operation or maintenance of equipment.
32. Plug or cap conduit ends as soon as conduit is installed, to prevent entrance of moisture or other debris during construction. Do not pull wire into any conduit until the conduit system is complete.
33. Drawings, in relation to the routing of conduits, are diagrammatic. Except where additional conduits may be required to avoid derating of branch circuits, elsewhere within this Section, the number and size of conduits and wire shall be furnished and installed as indicated by the drawings. Coordinate routing of conduits in the field with the building structure. Run conduit in straight lines parallel and perpendicular to walls, beams, and columns and with right angle bends and threaded conduit fittings. Maintain 12 inches clearance between conduit and surface with temperatures exceeding 104 degrees F.
34. Conduits passing through floors, walls and beams shall be of such size, number, and in such locations so as not to impair the strength of the construction.
35. Rout raceways in ceiling spaces in an orderly and organized manner, and to eliminate or minimize the number of junction boxes required. Support and secure conduits by means of rods, clamps and other conduit support devices approved by the Architect. Do not use wire to support conduits.
36. Where rigid metal conduit is threaded in the field, use a standard conduit cutting die providing 3/4 inch taper per foot.

37. Conduit and EMT runs shall be mechanically and electrically continuous from service entrance to outlets. Secure conduit to cabinet, junction box, pull box or outlet box with locknut outside and bushing inside, or with liquid-tight, threaded, self-locking, cold-weld wedge adapter. Locknuts and bushings or self-locking adapters will not be required where conduits are screwed into tapped connections. Before installing conductions, protect vertical conduit runs that terminate in bottoms of wall boxes or cabinets from entrance of foreign material.
38. Size rigid steel conduit, EMT and flexible metallic conduit required by the referenced Electrical Code, except as otherwise specified or shown on the drawings. Check raceway sizes to determine that equipment grounding conductor fits in same raceway with phase and neutral conductors to meet Rhode Island Electrical Code percentage of fill requirements.
39. Where conduit is secured rigidly on opposite sides of building expansion joints, and where runs of exposed conduit are long and subject to stress, provide expansion fittings capable of safely deflecting and expanding to twice the distance of structural movement. Provide separate external copper bonding jumper secured with grounding straps on each end of fitting.
40. Install a pull or junction box every 100 feet of straight conduit run, and wherever there is an equivalent of four 90 degree elbows or a total of 360 degree bend. Install no more than the equivalent of three 90-degree bends in any conduit run except for communications conduits, for which fewer bends are allowed.
41. Install sealing fittings at following points, and elsewhere as shown:
    a. Where conduits enter or leave hazardous areas equipped with explosion proof lighting fixtures, switches, receptacles, and other electrical devices.
    b. Where conduits pass from warm to cold locations.

42. Pull cords: In each empty raceway, provide nylon fishing line having tensile strength not less than 200 lbs, or provide No. 14 AWG steel wire. Label each end of each line or wire with a securely attached tag which indicates the location of the other end.
43. Liquid-tight type flexible conduits installed in the air-handling plenum space shall be with a plenum- rated outer jacket.
44. Threaded Conduit Joints, Exposed to Wet, Damp, Corrosive, or Outdoor Conditions: Apply listed compound to threads of raceway and fittings before making up joints. Follow compound manufacturer's written instructions.

E. General Outlet Box Installation:

1. Boxes shall be set flush with finish surface and provided with proper type extension rings or plaster covers. Thru the wall boxes are not permitted. Check device or fixture to be mounted to box to ensure box orientation is proper.
2. In addition to boxes shown, install additional boxes where needed to prevent damage to cables and wires during pulling-in operation.
3. Plug unused openings on all remove knockouts.

4. Where required for horizontal and vertical alignment of boxes in stud partitions, bar hangers spanning two studs shall be used. Device boxes for insertion type receptacles shall be provided with far side box supports where there are less than two entering nonflexible raceways, and where bar rangers are not provided.
5. Boxes flush mounted in fire rated partitions and on opposite sides of the partition shall be separated by a distance of 24 inches in accordance with UL listing for the box.
6. Locations of outlets indicated on drawings are approximate. For items exposed to view, refer to architectural drawings and coordinate locations with masonry joints, panel joints, ceiling grids, and structural members.
7. In case of conflict with standard mounting heights and device alignment, consult Architect prior to roughing.
8. Check all door swings on architectural drawings to ensure lighting switches are installed on strike side of door.
9. The right to make any reasonable change in location of outlets prior to roughing is reserved by Architect. "Reasonable change" shall be interpreted as movement within 10 feet of location shown.
10. Obtain dimensioned plan from Architect for floor outlets.
11. Outlet boxes for use where surface metal raceways are allowed shall be of a type specifically designed to be used with such surface metal raceway systems.

F. Conductor Installation:

1. No conductors shall be pulled into individual raceways until such raceway system is complete and free of debris. No harmful lubricants shall be used to ease pulling.
2. All conductors shall be wired so that grounded conductor is unbroken; switches in all cases being connected in ungrounded conductor.
3. Connections throughout the entire job shall be made with solderless type devices of approved design satisfactory to Inspector of Wires.
4. All taps and splices shall be insulated equal to that of conductor insulation.
5. All conductors of each feeder in pull boxes and wireways. shall be grouped, tied together, supported, and identified.
6. All conductors in panelboards and other wiring enclosures shall be neatly formed and grouped.
7. All conductors of emergency only and/or normal/emergency shall be run in separate raceway systems to final outlet box.
8. Provide support for conductors in vertical raceways in accordance with Article 300-19.
9. Strip insulation from conductors with approved tools and only of sufficient length for proper termination. Cutting of conductor stranding is unacceptable.
10. Taps from paralleled conductors shall be of a type which tap each conductor, such as ILSCO "PTA" series.
11. Grounding conductors are to be identified as to associated power circuits.

G. Type MC Cable Installation:

1. Where cable is permitted under the products section, the installation of same shall be done in accordance with code and the following:
   a. Cable shall be supported in accordance with code. Tie wire is not an acceptable means of support. Horizontally run cable supports such as Caddy WMX-6, and clamps on vertical runs such as Caddy CJ6 shall be used. Where cables are supported by the structure and only need securing in place, then ty-raps will also be acceptable. Ty-raps are not acceptable as a means of support. All fittings, hangers, and clamps for support and termination of cables shall be of types specifically designed for use with cable, i.e., romex connectors not acceptable.
   b. Armor of cable shall be removed with rotary cutter device equal to roto-split by Seatek Co., not with hacksaw.
   c. Use split "insuliner" sleeves at terminations.
   d. Any cable system used in conjunction with isolated ground circuits shall have both an isolated ground conductor and an equipment ground conductor.

H. Stranded Conductor Installation:

1. If Contractor selects stranded conductors for #10 AWG and smaller, terminate such conductors as follows:
   a. No stranded conductor may be terminated under a screwhead. Provide insulated terminal lugs for all screw connections equal to Thomas & Betts "STA-KON" type RC with forked tongue and turned up toes. Installation of lugs shall be done with compression tool such as T&B WT-145C which prevents opening of tool until full compression action is completed.
   b. Backwired wiring devices shall be of clamp type; screw tightened. Force fit connections not allowed.

2. Stranded conductors will not be allowed for fire alarm work.

I. Accessibility:

1. Electrical equipment requiring service or manual operation shall be accessible.
2. Work switches for equipment within accessible hung ceiling spaces, such as fan powered terminal boxes, shall be located at terminal box, and so located so as to be accessible.

J. Vibration Elimination: All equipment connections to rotating equipment or equipment capable of vibration shall be made up by flexible raceways.

K. Wiring Device Gaskets: Provide wiring device gaskets at cover plates where device is mounted in wall separating conditioned and non-conditioned spaces.

3.08 FEEDER CIRCUITS

A. Provide feeders as called for on the drawings.

B. Feeders shall be defined as any circuit originating from the main building switchboard and/or distribution panels.

C. All feeder conductors shall be continuous from origin to panel or equipment termination without splicing.

D. All feeders shall be conductors pulled into raceways. Cable systems are not allowed for feeders unless specifically indicated.

3.09 BRANCH CIRCUITS

A. Provide all branch circuit wiring and outlets for a complete and operating system. The system shall consist of insulated conductors connected to the panelboards and run in raceways or as cable systems if permitted under products section, to the final outlet and shall include outlet boxes, supports, fittings, receptacles, plates, fuses, for a fully functional system.

B. Provide dedicated neutrals for all lighting circuits and all circuits originating from panelboards fed from K-rated transformers.

C. Physical arrangement of branch circuit wiring shall correspond to circuit numbering on drawings. Combining of circuits and raceways will be allowed up to a 3 phase, 4 wire circuit or 3 phase 6 wire (dedicated neutrals) in a single raceway. Any combination of homeruns such as this, however, shall be indicated on record drawings. When a common grounded conductor is used for more than one circuit, the arrangement shall be such that a receptacle, fixture, or other device may be removed or disconnected without disconnecting the grounded conductor for other circuits. Ground fault circuit breakers and isolated ground outlets shall be wired with separate neutrals and separate grounding conductors per circuit. A consistent phase orientation shall be adhered to throughout project at terminations.

D. Circuits feeding three phase equipment shall not be combined into common raceways, unless specifically indicated.

E. All wiring in panelboards and cabinets shall be neatly formed and grouped.

3.10 FIREPROOFING AND WATERPROOFING

A. Fireproof and waterproof all openings in slabs and walls.

END OF SECTION

SECTION 31 00 00

EARTHWORK

PART 1 - GENERAL

1.01 WORK INCLUDED:

The Contractor shall make excavations of normal depth in earth for trenches and structures, shall backfill and compact such excavations to the extent necessary, shall furnish the necessary material and construct embankments and fills, and shall make miscellaneous earth excavations and do miscellaneous grading.

1.02 RELATED WORK:

A. Section 00 31 43, PERMITS

B. Section 01 11 00, CONTROL OF WORK AND MATERIALS

J. Section 32 91 19, LOAMING AND SEEDING

1.03 REFERENCES:

American Society for Testing and Materials (ASTM)

ASTM	C131	Test Method for Resistance to Degradation of Small Size Coarse Aggregate by Abrasion and Impact in the Los Angeles Machine.
ASTM	C136	Method for Sieve Analysis of Fine and Coarse Aggregates.
ASTM	C330	Specification for Lightweight Aggregate for Structural Concrete.
ASTM	D1556	Test Method for Density of Soil in Place by the Sand Cone Method.
ASTM	D1557	Test Methods for Moisture-density Relations of Soils and Soil Aggregate Mixtures Using Ten-pound (10 Lb.) Hammer and Eighteen-inch (18") Drop.
ASTM	D2922	Test Methods for Density of Soil and Soil-aggregate in Place by Nuclear Methods (Shallow Depth).

State of Rhode Island and Providence Plantations Department of Transportation (RI-DOT) Standard Specification for Road and Bridge Construction.

1.04 SUBMITTALS: IN ACCORDANCE WITH REQUIREMENTS OF GENERAL SPECIFICATIONS, SUBMIT THE FOLLOWING:

Samples of all materials proposed for the project shall be submitted to the Engineer for review. Size of the samples shall be as approved by the Engineer.

1.05 PROTECTION OF EXISTING PROPERTY:

A. The work shall be executed in such manner as to prevent any damage to facilities at the site and adjacent property and existing improvements, such as but not limited to streets, curbs, paving, service utility lines, structures, monuments, bench marks, observation wells, and other public or private property. Protect existing improvements from damage caused by settlement, lateral movements, undermining, washout and other hazards created by earthwork operations.

B. In case of any damage or injury caused in the performance of the work, the Contractor shall, at its own expense, make good such damage or injury to the satisfaction of, and without cost to, the Owner. Existing roads, sidewalks, and curbs damaged during the project work shall be repaired or replaced to at least the condition that existed at the start of operations. The Contractor shall replace, at his own cost, existing bench marks, observation wells, monuments, and other reference points which are disturbed or destroyed.

C. Buried drainage structures and pipes, observation wells and piezometers, including those which project less than eighteen inches (18") above grade, which are subject to damage from construction equipment shall be clearly marked to indicate the hazard. Markers shall indicate limits of danger areas, by means which will be clearly visible to operators of trucks and other construction equipment, and shall be maintained at all times until completion of project.

1.06 DRAINAGE:

The Contractor shall provide, at its own expense, adequate drainage facilities to complete all work items in an acceptable manner. Drainage shall be done in a manner so that runoff will not adversely affect construction procedures nor cause excessive disturbance of underlying natural ground or abutting properties.

1.07 FROST PROTECTION AND SNOW REMOVAL:

A. The Contractor shall, at its own expense, keep earthwork operations clear and free of accumulations of snow as required to carry out the work.

B. The Contractor shall protect the subgrade beneath new structures and pipes from frost penetration when freezing temperatures are expected.

PART 2 - PRODUCTS

2.01 MATERIAL:

A. GRAVEL BORROW:

1. Gravel Borrow shall satisfy the requirements listed in Column Ia, Table I in Section M.01.09 of RI-DOT Standards.

B. CRUSHED STONE:

1. Crushed stone shall satisfy the requirements listed in Column II, Table I in Section M.01.09 of RI-DOT Standards.

C. SAND BORROW:

1. Sand Borrow shall satisfy the requirements listed in Section M.01.08 of RI-DOT Standards.

D. PEASTONE:

1. Peastone shall be smooth, hard, naturally occurring, rounded stone meeting the following gradation requirements:

Passing 5/8-inch square sieve opening	-	100%
Passing No. 8 sieve opening	-	0%

E. BACKFILL MATERIALS:

1. Class B Backfill:

Class B backfill shall be granular, well graded friable soil; free of rubbish, ice, snow, tree stumps, roots, clay and organic matter; with 30 percent or less passing the No. 200 sieve; no stone greater than two-third (2/3) loose lift thickness, or six inches, whichever is smaller.

2. Select Backfill:

Select backfill shall be granular, well graded friable soil, free of rubbish, ice, snow, tree stumps, roots, clay and organic matter, and other deleterious or organic material; graded within the following limits:

Sieve Size	Percent Finer by Weight
3"	100
No. 10	30-95
No. 40	10-70
No. 200	0-10

F. SPECIAL PIPE BEDDING MATERIAL

1. The special pipe bedding material shall consist of a filter cloth installed on the trench bottom before backfilling with crushed stone as specified and as shown on the contract drawings.

2. The filter cloth shall be composed of needle punch, stapled fibers thermally bonded together to form a sheet.

3. The filter cloths shall possess the following minimum properties:

Grab strength:	120 lbs	ASTM D 4632.
Elongation:	50%	ASTM D 4632
Burst Strength:	240 psi	ASTM D 3786
Puncture Strength:	65 lbs.	ASTM D 4833
Trapezoid Tear:	4 0 lbs.	ASTM D 4533
Equivalent opening size:	No. 70 sieve	ASTM D 4751
Permittivity (sec^{-1})	1.8	ASTM D 4491
Flow Rate ($gal/min/ft^2$)	135	ASTM D-4491

The filter cloth shall be Tencate Mirafi 140N by Tencate Geosynthetics Americas; Pendergrass, GA; Foss-65 by Foss Manufacturing Co., Hampton, NH; US 120NW by US Fabrics, Cincinnati, OH or approved equal.

G. PROCESSED GRAVEL:

1. Processed gravel shall consist of inert material that is hard, durable stone and coarse sand, free from loam and clay, surface coatings and deleterious materials. The coarse aggregate shall have a percentage of wear, by the Los Angeles Abrasion Test, of not more than 50.

2. The gradation shall meet the following requirements:

Sieve Designation	Percentage Passing
3 in.	100
1 1/2 in.	70-100
1/2 in.	50-85
No. 4	30-60
No. 200	0-10

3. The approved source of bank-run gravel material shall be processed by mechanical means. The equipment for producing crushed gravel shall be of adequate size with sufficient adjustments to produce the desired materials. The processed material shall be stockpiled in such a manner to minimize segregation of particle sizes. All processed gravel shall come from approved stockpiles.

H. LIGHTWEIGHT FILL:

1. Lightweight Fill shall be rotary kiln expanded shale meeting all the requirements of ASTM C330. Particles shall be tough, durable, non-corrosive and have the following properties:

   a. Delivered Gradation:

Sieve Size	% Retained
1"	0
3/4"	0 to 20
#4	85 to 100

   b. The dry loose unit weight shall be less than 55 PCF.

   c. The Contractor shall submit verification of a compacted density of less than 70 PCF. Density shall be verified by testing in accordance with Standard AASHTO Test Designation T99.

   d. The maximum soundness loss when tested with five cycles of magnesium sulfate shall be ten percent in accordance with ASTM C131.

   e. Moisture content shall be determined by the Engineer.

   f. Provide manufacturer's certificate stating materials provided comply with the standards specified.

PART 3 - EXECUTION

3.01 DISTURBANCE OF EXCAVATED AND FILLED AREAS DURING CONSTRUCTION:

A. Contractor shall take the necessary steps to avoid disturbance of subgrade during excavation and filling operations, including restricting the use of certain types of construction equipment and their movement over sensitive or unstable materials, dewatering and other acceptable control measures.

B. All excavated or filled areas disturbed during construction, all loose or saturated soil, and other areas that will not meet compaction requirements as specified herein shall be removed and replaced with a minimum 12-inch layer of compacted special bedding materials or crushed stone wrapped all around in non-woven filter fabric. Costs of removal and replacement shall be borne by the Contractor.

C. The Contractor shall place a minimum of 12-inch layer of special bedding materials or crushed stone wrapped in filter fabric over the natural underlying soil to stabilize areas which may become disturbed as a result of rain, surface water runoff or groundwater seepage pressures, all at no additional cost to the Owner. The Contractor also has the

option of drying materials in-place and compacting to specified densities.

3.02 EXCAVATION:

A. GENERAL:

1. The Contractor shall perform all work of any nature and description required to accomplish the work as shown on the Drawings and as specified.

2. Excavations, unless otherwise required by the Engineer, shall be carried only to the depths and limits shown on the Drawings. If unauthorized excavation is carried out below required subgrade and/or beyond minimum lateral limits shown on Drawings, it shall be backfilled with gravel borrow and compacted at the Contractor's expense as specified below, except as otherwise indicated. Excavations shall be kept in dry and good conditions at all times, and all voids shall be filled to the satisfaction of the Engineer.

3. In all excavation areas, the Contractor shall strip the surficial topsoil layer and underlying subsoil layer separate from underlying soils. In paved areas, the Contractor shall first cut pavement as specified in paragraph 3.02 B.1 of this specification, strip pavement and pavement subbase separately from underlying soils. All excavated materials shall be stockpiled separately from each other within the limits of work.

4. The Contractor shall follow a construction procedure which permits visual identification of stable natural ground. Where groundwater is encountered, the size of the open excavation shall be limited to that which can be handled by the Contractor's chosen method of dewatering and which will allow visual observation of the bottom and backfill in the dry.

5. The Contractor shall excavate unsuitable materials to stable natural ground where encountered at proposed excavation subgrade, as required by the Engineer. Unsuitable material includes topsoil, loam, peat, other organic materials, snow, ice, and trash. Unless specified elsewhere or otherwise directed by the Engineer, areas where unsuitable materials have been excavated to stable ground shall be backfilled with compacted special bedding materials or crushed stone wrapped all around in non-woven filter fabric.

B. TRENCHES:

1. Prior to excavation, trenches in pavement shall have the traveled way surface cut in a straight line by a concrete saw or equivalent method, to the full depth of pavement. Excavation shall only be between these cuts. Excavation support shall be provided as required to avoid undermining of pavement. Cutting operations shall not be done by ripping equipment.

3. Trenches shall be excavated to such depths as will permit the pipe to be laid at the

elevations, slopes, and depths of cover indicated on the Drawings. Trench widths shall be as shown on the Drawings or as specified.

4. Where pipe is to be laid in bedding material, the trench may be excavated by machinery to, or just below, the designated subgrade provided that the material remaining in the bottom of the trench is not disturbed.

5. If pipe is to be laid in embankments or other recently filled areas, the fill material shall first be placed to a height of at least 12-inches above the top of the pipe before excavation.

6. Pipe trenches shall be made as narrow as practicable and shall not be widened by scraping or loosening materials from the sides. Every effort shall be made to keep the sides of the trenches firm and undisturbed until backfilling has been completed.

7. If, in the opinion of the Engineer, the subgrade, during trench excavation, has been disturbed as a result of rain, surface water runoff or groundwater seepage pressures, the Contractor shall remove such disturbed subgrade to a minimum of 12-inches and replace with special bedding materials or crushed stone wrapped in filter fabric. Cost of removal and replacement shall be borne by the Contractor.

C. BUILDING AND FOUNDATION EXCAVATION:

1. Excavations shall not be wider than required to set, brace, and remove forms for concrete, or perform other necessary work.

2. After the excavation has been made, and before forms are set for footings, mats, slabs, or other structures, and before reinforcing is placed, all loose or disturbed material shall be removed from the subgrade. The bearing surface shall then be compacted to meet the requirements of Section 3.0.3.A.

3. If, in the opinion of the Engineer, the existing material at subgrade elevation is unsuitable for structural support, the Contractor shall excavate and dispose of the unsuitable material to the required width and depth as required by the Engineer. If, in the opinion of the Engineer, filter fabric is required; the Contractor shall place filter fabric, approved by the Engineer, as per manufacturer's recommendations. Crushed stone shall then be placed in lifts and compacted to required densities. Backfill shall be placed to the bottom of the proposed excavation.

D. EXCAVATION NEAR EXISTING STRUCTURES:

1. Attention is directed to the fact that there are pipes, manholes, drains, and other utilities in certain locations. An attempt has been made to locate all utilities on the drawings, but the completeness or accuracy of the given information is not guaranteed.

2. As the excavation approaches pipes, conduits, or other underground structures,

digging by machinery shall be discontinued and excavation shall be done by means of hand tools, as required. Such manual excavation, when incidental to normal excavation, shall be included in the work to be done under items involving normal excavation.

3. Where determination of the exact location of a pipe or other underground structure is necessary for properly performing the work, the Contractor shall excavate test pits to determine the locations.

3.03 BACKFILL PLACEMENT AND COMPACTION:

A. GENERAL:

1. Prior to backfilling, the Contractor shall compact the exposed natural subgrade to the densities as specified in 3.03.A.3.

2. After approval of subgrade by the Engineer, the Contractor shall backfill areas to required contours and elevations with specified materials.

3. The Contractor shall place and compact materials to the specified density in continuous horizontal layers, not to exceed nine (9) inches in uncompacted lifts. The degree of compaction shall be based on maximum dry density as determined by ASTM Test D1557, Method C. The minimum degree of compaction for fill placed shall be as follows:

Location	Percent of Maximum Density
Above pipe centerline	92
Below pipe centerline	95
Below pavement (upper 3 ft.)	95
Embankments	95
Below pipe in embankments	95
Adjacent to structures	92
Below structures	95

2. The Engineer reserves the right to test backfill for conformance to the specifications and Contractor shall assist as required to obtain the information. Compaction testing will be performed by the Engineer or by an inspection laboratory designated by the Engineer, engaged and paid for by the Owner. If test results indicate work does not conform to specification requirements, the Contractor shall remove or correct the defective Work by recompacting where appropriate or replacing as necessary and approved by the Engineer, to bring the work into compliance, at no additional cost to the Owner. All backfilled materials under structures and buildings shall be field tested for compliance with the requirements of Section 3.0.3.A of this specification.

5. Where horizontal layers meet a rising slope, the Contractor shall key each layer by

benching into the slope.

6. If the material removed from the excavation is suitable for backfill with the exception that it contains stones larger than permitted, the Contractor has the option to remove the oversized stones and use the material for backfill or to provide replacement backfill at no additional cost to the Owner.

7. The Contractor shall remove loam and topsoil, loose vegetation, stumps, large roots, etc., from areas upon which embankments will be built or areas where material will be placed for grading. The subgrade shall be shaped as indicated on the Drawings and shall be prepared by forking, furrowing, or plowing so that the first layer of the fill material placed on the subgrade will be well bonded to the subgrade.

8. Where called for on the Drawings, Lightweight Fill shall be placed and compacted as recommended by the manufacturer. The exact number of passes shall be approved by the Engineer to insure stability of the layer. As soon as the compaction of each layer has been completed, the next layer shall then be placed. The Contractor shall take all necessary precautions during construction activities in operations on or adjacent to the Lightweight Fill to ensure that the material is not over-compacted. Construction equipment, other than for compaction, shall not operate on the exposed Lightweight Fill. The top surface of the Lightweight Fill lying directly below the gravel course shall be chinked by additional rolling of the Lightweight Fill to prevent infiltration of fines.

B. TRENCHES:

1. Bedding as detailed and specified shall be furnished and installed beneath the pipeline prior to placement of the pipeline. A minimum bedding thickness shall be maintained between the pipe and undisturbed material, as shown on the Drawings.

2. As soon as practicable after pipes have been laid, backfilling shall be started.
3. Unless otherwise indicated on the Drawings, select backfill shall be placed by hand shovel in 6-inch thick lifts up to a minimum level of 12-inches above the top of pipe. This area of backfill is considered the zone around pipe and shall be thoroughly compacted before the remainder of the trench is backfilled. Compaction of each lift in the zone around pipe shall be done by use of power-driven tampers weighing at least 20 pounds or by vibratory compactors. Care shall be taken that material close to the bank, as well as in all other portions of the trench, is thoroughly compacted to densities required.

4. Class B backfill shall be placed from the top of the select backfill to the specified material at grade (loam, pavement subbase, etc.). Fill compaction shall meet the density requirements listed in paragraph 3.03 A.3.

5. Water Jetting:

a. Water jetting may be used when the backfill material contains less than 10 percent passing the number 200 sieve, but shall be used only if approved by the Engineer.

b. Compaction of backfill placed by water jetting shall conform to the requirements of Paragraph 3.03 A.3.

6. If, in the opinion of the Engineer, the materials above the trench bottom are unsuitable for backfill, and there is no available backfill material stockpiled, the Contractor shall furnish and place gravel borrow.

7. Should the Engineer order crushed stone for utility supports or for other purposes, the Contractor shall furnish and install the crushed stone as required.

8. In shoulders of streets and road, the top 12-inch layer of trench backfill shall consist of processed gravel for sub-base, satisfying the requirements of Paragraph 2.01.

C. BACKFILLING UNDER BUILDINGS AND FOUNDATIONS:

1. Material to be used as structural fill under structures shall be special bedding material or gravel borrow, as shown on the Drawings or as required by the Engineer. Where gravel borrow fill is required to support proposed footings, walls, slabs, and other structures, the material shall be placed in a manner accepted by the Engineer. Compaction of each lift shall meet the densities required in paragraph 3.03 A.3.

D. BACKFILLING ADJACENT TO STRUCTURES:

1. The Contractor shall not place backfill against or on structures until they have attained sufficient strength to support the loads to which they will be subjected. Excavated material approved by the Engineer may be used in backfilling around structures. Backfill material shall be thoroughly compacted to meet the requirements listed in Paragraph 3.03 A.3.

2. Contractor shall use extra care when compacting adjacent to pipes and drainage structures. Backfill and compaction shall proceed along sides of drainage structures so that the difference in top of fill level on any side of the structure shall not exceed two feet (2') at any stage of construction.

3. Where backfill is to be placed on only one side of a structural wall, only hand-operated roller or plate compactors shall be used within a lateral distance of five feet (5') of the wall for walls less than fifteen feet (15') high and within ten feet (10') of the wall for walls more than fifteen feet (15') high.

3.04 DISPOSAL OF SURPLUS MATERIALS:

A. No excavated material shall be removed from the site of the work or disposed of by the Contractor unless approved by the Engineer.

B. Surplus excavated materials which are acceptable to the Engineer shall be used to backfill normal excavations in rock or to replace other materials unacceptable for use as backfill. Upon written approval of the Engineer, surplus excavated materials shall be neatly deposited and graded so as to make or widen fills, flatten side slopes, or fill depressions; or shall be neatly deposited for other purposes as indicated by the Owner, within its jurisdictional limits; all at no additional cost to the Owner.

C. Surplus excavated material not needed as specified above shall be hauled away and disposed of by the Contractor at no additional cost to the Owner, at appropriate locations, and in accordance with arrangements made by him. Disposal of all rubble shall be in accordance with all applicable local, state and federal regulations.

END OF SECTION

P:\RI\Woonsocket, RI\ENG23-0204 - WWTF GT Internal Upgrades\Specifications\2 - First Draft Specs\31 00 00.00 - EARTHWORK.docx

SECTION 32 91 19

LOAMING AND SEEDING

PART 1 - GENERAL

1.01 WORK INCLUDED:

This section covers all labor, materials, and equipment necessary to do all loaming, seeding and related work as indicated on the drawings and as herein specified. All lawns disturbed by the Contractor's operations shall be repaired as herein specified.

1.02 RELATED WORK:

A. Section 31 00 00, EARTHWORK

1.03 QUALITY ASSURANCE:

A. For a particular source of loam, the Engineer may require the Contractor to send approximately 10 pounds of loam to an approved testing laboratory and have the following tests conducted:

1. Organic concentration
2. pH
3. Nitrogen concentration
4. Phosphorous concentration
5. Potash concentration

B. These tests shall be at the Contractor's expense. Test results, with soil conditioning and fertilizing recommendations, shall be forwarded to the Engineer.

1.04 SUBMITTALS: IN ACCORDANCE WITH REQUIREMENTS OF SECTION 01 33 23 SUBMITTALS, SUBMIT THE FOLLOWING:

A. Information detailing the seed mixes, fertilizers, mulch material, slope protection material (if required) and origin of loam.

B. Test results.

PART 2 - PRODUCTS

2.01 MATERIALS:

A. LOAM:

1. Loam shall be a natural, fertile, friable soil, typical of productive soils in the vicinity, obtained from naturally well-drained areas, neither excessively acid nor

alkaline, and containing no substances harmful to grass growth. Loam shall not be delivered to the site in frozen or muddy condition and shall be reasonably free of stumps, roots, heavy or stiff clay, stones larger than 1-inch in diameter, lumps, coarse sand, noxious weeds, sticks, brush or other litter.

2. The loam shall contain not less than 4 percent or more than 20 percent organic matter as determined by the loss of weight by ignition of oven-dried samples. Test samples shall be oven-dried to a constant weight at a temperature of 230 degrees F.

B. LIME:

Lime shall be standard commercial ground limestone containing at least 50 percent total oxides (calcium oxide and magnesium oxide), and 50 percent of the material must pass through a No. 100 mesh sieve with 98 percent passing a No. 2 mesh sieve.

C. FERTILIZER:

Fertilizer shall be commercial fertilizer, 10-10-10 fertilizer mixture containing at least 40 percent of organic nitrogen. It shall be delivered to the site in the original sealed containers, each showing the manufacturer's guaranteed analysis. Fertilizer shall be stored so that when used it will be dry and free flowing. No fertilizer shall be used which has not been marketed in accordance with State and Federal Laws, relating to fertilizers.

D. MULCH:

1. Materials to be used in mulching shall conform to the following requirements:

2. Straw Mulch - Straw Mulch shall consist of stalks or stems of grain after threshing.

3. Wood Fiber Mulch - Wood Fiber Mulch shall consist of wood fiber produced from clean, whole uncooked wood, formed into resilient bundles having a high degree of internal friction and shall be dry when delivered to the project.

E. SEED:

1. Seed shall be of an approved mixture, the previous year's crop, clean, high in germinating value, a perennial variety, and low in weed seed. Seed shall be obtained from a reliable seed company and shall be accompanied by certificates relative to mixture purity and germinating value.

2. Grass seed for lawn areas shall conform to the following requirements:

	Proportion by Weight	Germination Purity	Purity Minimum
Chewing's Fescue	30%	70%	97%
Kentucky 31 Fescue	30%	90%	98%

Kentucky Blue Grass	20%	80%	85%
Domestic Rye Grass	20%	90%	98%

Grass seed for cross-country areas, slopes and other areas not normally mowed shall conform to the following requirements:

	Proportion by Weight	Germination Minimum	Purity Minimum
Creeping Red Fescue	50%	85%	95%
Kentucky 31	30%	85%	95%
Domestic Rye	10%	90%	98%
Red Top	5%	85%	92%
Ladino Clover	5%	85%	96%

F. TEMPORARY COVER CROP:

1. Temporary cover crop shall conform to the following requirements:

	% Weight	Germination Minimum
Winter Rye	80 min.	85%
Red Fescue (creeping)	4 min.	80%
Perennial Rye Grass	3 min.	90%
Red Clover	3 min.	90%
Other Crop Grass	0.5 max.	
Noxious Weed Seed	0.5 max.	
Inert Matter	1.0 max.	

G. SLOPE EROSION PROTECTION:

1. Erosion control blanket shall be 100% degradable plastic mesh with 100% degradable straw or straw/coconut fill. Fill shall be held together by degradable fastening. Weight shall be 0.50 lb. /sq. yd. Erosion control blankets shall be applied parallel to direction of water flow. The erosion control blankets shall be by North American Green, Evansville, IN or approved equal. For slopes 2:1 or greater, Model SC150 shall be used. For slopes less than 2:1, Model S150 shall be used.

2. Six inch wire staples shall be placed according to manufacturer's recommendations to anchor the mesh material. Staples shall be designed to decompose.

PART 3 - EXECUTION

3.01 SURFACE PREPARATION:

A. After approval of rough grading, loam shall be placed on areas affected by the Contractor's operations. Loam shall be at least 6-inches compacted thickness.

B. Lime shall be applied to bring the pH to 6.5 or, without a soil test, at the rate of 2-3 tons of lime per acre.

C. Fertilizer shall be applied according to the soil test, or without a soil test, at the rate of 1000 pounds per acre.

D. Loam shall be worked a minimum of 3-inches deep, thoroughly incorporating the lime and fertilizer into the soil. The loam shall then be raked until the surface is finely pulverized and smooth and compacted with rollers, weighing not over 100 pounds per linear foot of tread, to an even surface conforming to the prescribed lines and grades. Minimum depth shall be 6-inches after completion.

3.02 SEEDING:

A. Seeding shall be done when weather conditions are approved as suitable, in the periods between April l and May 30 or August l5 to October l, unless otherwise approved.

B. If there is a delay in seeding, during which weeds grow or soil is washed out, the Contractor shall remove the weeds or replace the soil before sowing the seed, without additional compensation. Lightly rake soil immediately before seeding.

C. Seed shall be sown at the approved rate, on a calm day by machine.

D. One half the seed shall be sown in one direction and the other half at right angles. Seed shall be raked lightly into the soil to a depth of l/4-inch and rolled with a roller weighing not more than l00 pounds per linear foot of tread.

E. The surface shall be kept moist by a fine spray until the grass shows uniform germination over the entire area. Wherever poor germination occurs in areas larger than 3 sq. ft., the Contractor shall reseed, roll, and water as necessary to obtain proper germination.

F. The Contractor shall water, weed, cut and otherwise maintain and protect seeded areas as necessary to produce a dense, healthy growth of perennial lawn grass.

G. If there is insufficient time in the planting season to complete the fertilizing and seeding, permanent seeding may be left until the following planting season, at the option of the Contractor or as required by the Engineer. In that event, a temporary cover crop shall be sown. This cover crop shall be cut and watered as necessary until the beginning of the following planting season, at which time it shall be plowed or harrowed into the soil, the area shall be fertilized and the permanent seed crop shall be sown as specified.

3.03 PLACING MULCH:

A. Straw Mulch shall be loosely spread to a uniform depth over all areas designated on the plans, at the rate of 4-1/2 tons per acre, or as otherwise required.

B. Straw Mulch may be applied by mechanical apparatus, if in the judgment of the Engineer the apparatus spreads the mulch uniformly and forms a suitable mat to control slope erosion. The apparatus shall be capable of spreading at least 80 percent of the hay or straw in lengths of 6-inches or more, otherwise it shall be spread by hand without additional compensation.

C. Wood Fiber Mulch shall be uniformly spread over certain selected seeded areas at the minimum rate of 1,400 pounds per acre unless otherwise required. It shall be placed by spraying from an approved spraying machine having pressure sufficient to cover the entire area in one operation.

3.04 SEEDING AND MULCHING BY SPRAY MACHINE:

A. The application of lime, fertilizer, grass seed and mulch may be accomplished in one operation by the use of an approved spraying machine. The materials shall be mixed with water in the machine and kept in an agitated state in order that the materials may be uniformly suspended in the water. The spraying equipment shall be so designed that when the solution is sprayed over an area, the resulting deposits of lime, fertilizer, grass seed and mulch shall be equal to the specified quantities.

B. A certified statement shall be furnished, prior to start of work, to the Engineer by the Contractor as to the number of pounds of limestone, fertilizer, grass seed and mulch per 100 gallons of water.

C. This statement should also specify the number of square yards of seeding that can be covered with the solution specified above. If the results of the spray operation are unsatisfactory, the Contractor will be required to abandon this method and to apply the lime, fertilizer, grass seed and mulch by other methods.

3.05 INSPECTION AND ACCEPTANCE:

At the beginning of the planting season following that in which the permanent grass crop is sown, the seeded areas will be inspected. Any section not showing dense, vigorous growth at that time shall be promptly reseeded by the Contractor at his own expense. The seeded areas shall be watered, weeded, cut and otherwise maintained by the Contractor until the end of that planting season, when they will be accepted if the sections show dense, vigorous growth.

END OF SECTION

SECTION 33 31 13.19

DUCTILE IRON PIPE

PART 1 - GENERAL

1.01 WORK INCLUDED:

This Section covers the furnishing, handling, hauling, laying, jointing, and testing of ductile iron pipe used for pressurized (i.e., force mains and above-grade/interior exposed pressure sewer pipe) and non-pressurized (i.e., gravity sewer) applications, including fittings and appurtenant work as indicated on the drawings and as specified.

1.02 RELATED WORK:

A. Section 09 90 00, PAINTING

1.03 QUALITY ASSURANCE

A. All pipe and fittings shall be inspected and tested at the foundry as required by the standard specifications to which the material is manufactured. The Contractor shall furnish in duplicate to the Engineer sworn certificates of such tests.

B. In addition, the Owner reserves the right to have any or all pipe, fittings and special castings inspected and/or tested by an independent service at either the manufacturer's plant or elsewhere. Such inspection and/or tests shall be at the Owner's expense.

1.04 REFERENCES:

A. The following standards form a part of these specifications as referenced:

American National Standards Institute (ANSI)

ANSI A21.4 Cement-Mortar Lining for Ductile-Iron Pipe and Fittings for Water

ANSI A21.10 Ductile-Iron and Gray-Iron Fittings, 3-inches through 48-inches, for Water and Other Liquids

ANSI A21.11 Rubber Gasket Joints for Ductile-Iron Pressure Pipe and Fittings

ANSI A21.15 Flanged Ductile-Iron Pipe with Threaded Flanges
ANSI A21.50 Thickness Design of Ductile-Iron Pipe

ANSI A21.51 Ductile-Iron Pipe, Centrifugally Cast in Metal or Sand-Lined Molds for Water or Other Liquids

ANSI A21.53 Ductile-Iron Compact Fittings, 3 inch Through 16 inch., for Water and Other Liquids.

American Water Works Association

AWWA	C104	Cement-Mortar Lining for Ductile- Iron Pipe and Fittings for Water Flexible Elastomeric Seals
AWWA	C110	Ductile-Iron and Gray-Iron Fittings, 3 inches through 48 inches, for Water and Other Liquids
AWWA	C111	Rubber Gasket Joints for Ductile- Iron and Gray-Iron Pressure Pipe and Fittings
AWWA	C150	Thickness Design of Ductile-Iron Pipe
AWWA	C116	Protective Fusion Bonded Epoxy Coatings for the Interior and Exterior Surfaces of Ductile-Iron and Gray-Iron Fittings
AWWA	C151	Ductile-Iron Pipe, Centrifugally Cast for Water or Other Liquids
AWWA	C153	Ductile-Iron Compact Fittings, 3 inches through 64 inches for Water Service.
AWWA	C600	Installation of Ductile-Iron Water Mains
AWWA	C606	Standard for Grooved and Shouldered Joints
AWWA	C651	Standard for Disinfecting Water Mains

American Society for Testing and Materials (ASTM)

ASTM A53	Pipe, Steel, Black and Hot-Dipped, Zinc-Coated (Galvanized) Welded and Seamless
ASTM A307	Low-Carbon Steel, Externally and Internally Threaded Standard Fasteners

1.05 SUBMITTALS: IN ACCORDANCE WITH REQUIREMENTS OF SECTION 01 33 23 SUBMITTALS, SUBMIT THE FOLLOWING:

A. Manufacturer's literature of the materials of this section.

B. Shop drawings consisting of manufacturer's scale drawings, cuts or catalogs including descriptive literature and complete characteristics and specifications, and code requirements. Shop drawings shall be submitted for the ductile iron pipe, type of joint, fittings, couplings, filling rings, and lining and coating in accordance with specifications.

C. Pipe support design calculations stamped and approved by a Professional Engineer registered in the state where the project is located.

D. Link-Seal submittals shall be provided by the Contractor.

E. Grout Filler for pipe penetrations shall be included with the submittals.

PART 2 - PRODUCTS

2.01 DUCTILE IRON PIPE:

A. Buried pipe:

1. The Contractor shall use push-on joint ductile iron pipe unless otherwise indicated on the plans or specified herein.

2. All ductile iron pipe shall be designed in accordance with AWWA C150 and shall be manufactured in accordance with AWWA C151.

3. Unless otherwise indicated or specified, ductile iron pipe shall be Thickness Class 52.

B. Above-grade/interior pipe:

1. The Contractor shall use flanged joint ductile iron pipe unless otherwise indicated on the plans or specified herein.

a. Flanged joints shall conform to ANSI A2l.15 except that special drilling or tapping shall be provided as necessary to ensure correct alignment and bolting.

b. Flanged pipe shall use long-hub flanges which shall be screwed on tight at the foundry by machine before they are faced and drilled.

2. All ductile iron pipe shall be designed in accordance with ANSI A21.50 and shall be manufactured in accordance with ANSI A21.51.

3. Pipe for use with sleeve type couplings shall be as specified above except that the ends shall be plain (without bells or beads). The ends shall be cast or machined at right angles to the axis.

4. Pipe for use with grooved type couplings shall have ends grooved in accordance with AWWA C606.

5. Pipe thickness class, unless otherwise indicated:

a. Minimum thickness class shall be Class 53 for use with threaded flanges.

b. For grooved couplings, minimum thickness class shall be Class 53 for pipe smaller than 18-inches and Class 56 for pipe 18-inches and larger.

C. All pipe delivered to the job site shall be accompanied by independent testing laboratory reports certifying that the pipe and fittings conform to the above-mentioned specifications. In addition,

the pipe shall be subject to thorough inspection and tests, the right being reserved for the Engineer to apply such of the tests specified, as he may from time to time deem necessary.

D. All cutting of pipe shall be done with a machine suitable for cutting DI pipe. Cut ends shall be beveled when recommended by the pipe manufacturer.

2.02 FITTINGS:

A. Buried pipe:

1. Fittings shall conform to the requirements of AWWA C110 or C153 as appropriate and shall be of a pressure classification at least equal to that of the pipe with which they are used.

2. The Contractor shall use ductile iron fittings. Cast-iron, Class 250 fittings may be substituted, upon approval of the Engineer, for ductile iron fittings.

3. Unless otherwise indicated, fittings shall have all bell mechanical joint ends.

B. Above-grade/interior pipe:

1. Fittings shall conform to the requirements of ANSI A2l.10 and shall be of a pressure classification at least equal to that of the pipe with which they are used.

2. Flanged fittings shall be faced and drilled in accordance with ANSI A2l.10 except that special drilling or tapping shall be provided as necessary to ensure correct alignment and bolting.

3. Fittings shall be provided with standard bosses where so indicated.

2.03 GASKETS, GLANDS, NUTS AND BOLTS:

A. Gaskets, glands, nuts, bolts and accessories shall conform to AWWA C111 or C153 as appropriate.

B. Gaskets shall be of plain tipped rubber, suitable for exposure to the liquid within the pipe.

C. Glands shall be ductile or cast iron.

D. All bolts and nuts shall be stainless steel.

F. For flanged joints, gaskets shall be a minimum of 1/8-inch thick full-face gaskets. Flanged joints shall be either made with bolts, bolt studs with a nut on each end, or studs with nuts where the flange is tapped. The number and size of bolts shall conform to the same ANSI Standard as flanges.

2.04 LINING AND COATING:

A. The inside of pipe and fittings shall be coated with a double-thickness cement lining and seal

coating in accordance with manufacturers recommendations.

B. The outside of buried pipe and fittings shall be coated with the standard asphaltic coating specified under the appropriate AWWA Standard Specification for pipe and fittings.

C. The outside of above-grade/interior exposed pipe and fittings shall not be coated with the bituminous coating but shall be thoroughly cleaned as recommended by the coating manufacturer and given one shop coat of 69-1211 H.B. Epoxoline II primer made by Tnemec Company, Inc.; Multiprime made by Pittsburgh Plate Glass Co., Pittsburgh, PA; Recoatable Epoxy Primer B67H5/R5 made by Sherwin-Williams Company; or an approved equal product. Above-grade/interior exposed pipe shall also be field painted per 09 90 00.

D. Machined surfaces shall be cleaned and coated with a suitable rust preventative coating at the shop immediately after being machined.

2.05 FLEXIBLE COUPLINGS:

A. All sleeve-type couplings and accessories shall be of a pressure rating at least equal to that of the pipeline in which they are to be installed.

B. Couplings shall be cast or ductile iron and shall be provided with gaskets of a composition suitable for exposure to the liquid within the pipe.

C. Couplings for buried pipe shall be Dresser 153; Smith-Blair Type 441 or 443; Romac Style 501; Ford Style FC1 or FC2; or approved equal.

2.06 JOINT RESTRAINT:

A. Where indicated or necessary to prevent joints or flexible couplings from pulling apart under pressure, suitable socket pipe clamps, tie rods, and bridles shall be provided. Bridles and tie rods shall be at least 3/4-inch diameter except where they replace flange bolts of smaller size, in which case they shall be fitted with a nut on each side of the pair of flanges. The socket clamps and tie rods or bridles shall be coated with an approved primer paint after assembly, or, if necessary, prior to assembly.

2.07 RESTRAINED FLANGE ADAPTER:

A. Restrained flange adapter shall be used in lieu of threaded or welded flanged spool pieces. Flanged adapters shall be made of ductile iron conforming to ASTM A536 and have flange bolt circles that are compatible with ANSI/AWWA C110/A21.20 (125#/Class 150 Bolt Pattern).

B. Restraint for flange adapter shall consist of a plurality of individual actuated gripping wedges to maximize restraint capability. Torque limiting actuating screws shall be used to insure proper initial set of gripping wedges.

C. The flange adapters shall be capable of deflection during assembly or permit lengths of pipe to be field cut to allow a minimum of 0.6-inch gap between the end of the pipe and the mating flange without affecting the integrity of the seal.

D. All internal surfaces of the gasket ring (wetted parts) shall be lined with a minimum of 15 mils of fusion bonded epoxy conforming to the applicable requirements of ANSI/AWWA C213. The coating shall meet ANSI/NSF-61. Exterior surfaces of the gasket ring shall be coated with a minimum of 6 mils of fusion bonded epoxy conforming to the applicable requirements of ANSI/AWWA C116/A21.16.

E. The flange adapter shall be the Series 2100 MEGAFLANGE Restrained Flange Adapter as produced by EBAA, Inc., or approved equal.

2.08 LINK-SEAL® MODULAR SEALS AND GROUT:

A. All pipe penetrations through existing concrete walls shall be installed with two (2) modular Link-Seal® devices per penetration. Refer to Section 01 73 29.00 CUTTING, CORING AND PATCHING for information regarding these modular seals and grout patching in and over the pipe penetrations after the Link-Seals® are installed.

PART 3 - EXECUTION

3.01 INSPECTION BEFORE INSTALLATION:

A. Pipes and fittings shall be subjected to a careful inspection just before being laid or installed.

3.02 HANDLING AND CUTTING:

A. Any pipe or fitting which has a damaged lining, scratched or marred machine surface and/or abrasion of the pipe coating or lining shall be rejected and removed from the job-site.

B. Any fitting showing a crack and any fitting or pipe which has received a severe blow that may have caused incipient fracture, even though no such fracture can be seen, shall be marked as rejected and removed at once from the work.

C. In any pipe showing a distinct crack and in which it is believed there is no incipient fracture beyond the limits of the visible crack, the cracked portions, if so approved, may be cut off by and at the expense of the Contractor before the pipe is laid so that the pipe used will be perfectly sound. The cut shall be made in the sound barrel at a point at least 12-inches from the visible limits of the crack.

D. Except as otherwise approved, all cutting shall be done with a machine suitable for cutting ductile iron pipe. Hydraulic squeeze cutters are not acceptable for cutting ductile iron pipe. Travel type cutters or rotary type abrasive saws may be used. All cut ends shall be examined for possible cracks caused by cutting.

E. The Contractor's attention is directed to the fact that damage to the lining of pipe or fittings will render them unfit for use; he shall use the utmost care in handling and installing lined and coated pipe and fittings to prevent damage. Protective guards shall not be removed until the pipe is to be installed.

F. Lined and coated pipe and fittings shall be assembled and installed with approved packing or gaskets of the type recommended by the pipe manufacturer for the particular lining used.

3.03 INSTALLING BURIED PIPE AND FITTINGS (NOT APPLICABLE):

A. Pipe shall be laid to conform to the lines and grades indicated on the drawings or given by the Engineer. Each pipe shall be so laid as to form a close joint with the next adjoining pipe and bring the inverts continuously to the required grade.

B. The pipe shall be supported by compacted crushed stone. Crushed stone shall be as specified under Section 31 00 00, EARTHWORK.

C. The pipe shall not be driven down to grade by striking it with a shovel handle, timber, rammer, or other unyielding object. When each pipe has been properly bedded, enough of the backfill material shall be placed and compacted between the pipe and the sides of the trench to hold the pipe in correct alignment.

D. Before a joint is made, the pipe shall be checked to assure that a close joint with the next adjoining pipe has been maintained and that inverts are matched and conform to the required line and grade.

E. For pipe placed on crushed stone, immediately after the joint is made, the jointing area shall be filled with suitable materials so placed and compacted that the ends of either pipe will not settle under backfill load.

F. No pipe or fitting shall be permanently supported on saddles, blocking, or stones.

G. Branches and fittings shall be laid by the Contractor as indicated on the drawings, and/or as required by the Engineer. Open ends of pipe and branches shall be closed with DI caps secured in place with pre-molded gasket joints or as required by the Engineer.

H. All pipe joints shall be made as nearly watertight as practicable. There shall be no visible leakage at the joints and there shall be no sand, silt, clay, or soil of any description entering the pipeline at the joints. Where there is evidence of water or soil entering the pipeline, connecting pipes, or structures, the defects shall be repaired to the satisfaction of the Engineer.

I. The Contractor shall build a tight bulkhead in the pipeline where new work enters an existing sewer. This bulkhead shall remain in place until its removal is authorized by the Engineer.

J. Care shall be taken to prevent earth, water, and other materials from entering the pipe, and when pipe-laying operations are suspended, the Contractor shall maintain a suitable stopper in the end of the pipe and at openings for manholes.

K. As soon as possible after the pipe and manholes are completed on any street, the Contractor shall flush out the new pipeline using a rubber ball ahead of the water, and none of the flushing water or debris shall be permitted to enter any existing sewer.

L. Push-on joints:

1. Joining of push-on joint pipe shall conform to AWWA C600.

2. If effective sealing of the joint is not attained, the joint shall be disassembled, thoroughly cleaned, a new gasket inserted and joint reassembled.

M. Mechanical Joints:

1. Assembling of fittings with mechanical joint ends shall conform to AWWA C600.

2. If effective sealing of the joint is not attained at the maximum torque indicated in the above standard, the joint shall be disassembled and thoroughly cleaned, then reassembled. Bolts shall not be overstressed to tighten a leaking joint.

3.04 INSTALLING ABOVE-GRADE/INTERIOR PIPE AND FITTINGS:

A. No defective pipe or fittings shall be laid or placed in the piping, and any piece discovered to be defective after having been laid or placed shall be removed and replaced by a sound and satisfactory piece.

B. Pipes and fittings shall be subjected to a careful inspection and a hammer test just before being installed.

C. Before the pieces are assembled, rust-preventive coatings shall be removed from machined surfaces. Pipe ends, sockets, sleeves, housings, and gaskets shall be thoroughly cleaned and all burrs and other defects shall be carefully smoothed.

D. Each pipe and fitting shall be cleared of all debris, dirt, etc., before being laid and shall be kept clean until accepted in the completed work.

E. Flanged joints shall be made up tight, care being taken to prevent undue strain upon pump nozzles, valves, and other pieces of equipment.

F. Pipe and fittings shall be laid accurately to the lines and grades indicated on the drawings or as required by the Engineer. Care shall be taken to ensure good alignment both horizontally and vertically.

G. Castings to be encased in masonry shall be accurately set with the bolt holes, if any, carefully aligned.

H. Immediately prior to being set, castings shall be thoroughly cleaned of all rust, scale and other foreign material.

3.05 SLEEVE-TYPE COUPLINGS:

A. Pipe ends shall be cleaned thoroughly prior to installation. After the bolts have been inserted and all nuts have been made up finger tight, diametrically opposite nuts shall be progressively and uniformly tightened all around the joint, preferable by use of a torque wrench of the

appropriate size and torque for the bolts. The correct torque as indicated by a torque wrench shall not exceed 90 foot-lb.

3.06 PIPING SUPPORT:

A. The Contractor shall furnish and install all supports necessary to hold the piping and appurtenances in a firm, substantial manner at the lines and grades indicated on the drawings or specified. Pipe supports shall be furnished with one shop coat of rust inhibitive primer.

B. All pipe and appurtenances connected to equipment shall be supported in such a manner as to prevent any strain being imposed on the equipment. When manufacturers have indicated requirements that piping loads shall not be transmitted to their equipment, the Contractor shall submit a certification from the manufacturer stating that such requirements have been complied with.

C. Piping within buildings shall be adequately supported from floors, walls, ceilings or beams. Supports from the floor shall be by approved saddle stands, or suitable concrete piers as indicated or approved. Pipe saddles shall be shaped to fit the pipe with which they will be used and shall be capable of screw adjustment. Brick and concrete piers shall conform accurately to the bottom one-third to one-half of the pipe. Piping along walls shall be supported by approved wall brackets with attached pipe rolls or saddles or by wall brackets with adjustable hanger rods. For piping supported from the ceiling, approved rod hangers of a type capable of screw adjustment after erection of the piping and with suitable adjustable concrete inserts or beam clamps shall be used.

3.07 TAPPED CONNECTIONS:

A. Tapped connections in pipe and fittings shall be made so as to provide a watertight joint and adequate strength against pullout. The maximum size of taps in pipe or fittings without bosses shall not exceed that listed in the appropriate table of the Appendix to the ANSI A2l.51, based on 3 full threads for ductile iron.

B. Where the size of the connection exceeds that given above, a boss shall be provided on the pipe barrel and the tap shall be made in the flat part of the intersection of the run and branch of a tee or cross, or the connection shall be made by means of a tapped tee, branch fitting and tapped plug or reducing flange, or tapping tee and tapping valve, all as indicated or approved.

C. All drilling and tapping of ductile iron pipe shall be done normal to the longitudinal axis of the pipe; fittings shall be drilled and tapped similarly, as appropriate. Drilling and tapping shall be done only by skilled mechanics. Tools used shall be adapted to the work and in good condition so as to produce good, clean-cut threads of the correct size, pitch, and taper.

3.08 QUALITY ASSURANCE

A. Leakage testing for buried pipe and fittings:

1. Prior to the pressure and leakage tests, the piping shall be thoroughly flushed clean of all dirt, dust, oil, grease and other foreign material. This work shall be done with care to avoid damage to linings and coatings.

2. The installed pipe shall be pressure tested and leakage tested in accordance with AWWA Standard C600.
3. Unless otherwise approved, all pipelines shall be given a combined pressure and leakage tests between line valves. The Contractor shall furnish and install suitable temporary testing plugs or caps; all necessary pressure pumps, pipe connections, meters, gates, and other necessary equipment; and all labor required. The Owner or Engineer shall have the privilege of using their own gages.

4. Subject to approval and provided that the tests are made within a reasonable time considering the progress of the project as a whole, and the need to put the section into service, the Contractor may make the tests when he desires.

5. Unless it has already been done, the section of pipe to be tested shall be filled with water of approved quality, and all air shall be expelled from the pipe. The Contractor shall follow established procedures for filling the pipe and expelling trapped air to avoid exposing the piping system to water-hammer. If blowoffs are not available at high points for releasing air, the Contractor shall excavate as required and install the necessary taps. If the Contractor changes the grade of pipe installation, he will be responsible for locating the taps at the correct location in the system for testing. Taps shall be installed at the beginning and end of each run. After completion of the test, if so required by the Engineer, he shall remove corporations used for testing; plug the holes and backfill as necessary.

6. The section under test shall be maintained full of water for a period of 24 hours prior to the combined pressure and leakage test being applied.

7. The pressure shall consist of first raising the water pressure (based on the elevation of the lowest point of the section under test corrected to the gage location) to a pressure in pounds per square inch numerically equal to the pressure rating of the pipe (150 psi, unless otherwise noted). If the Contractor cannot achieve the specified pressure and maintain it for a period of one hour, the section shall be considered as having failed to pass the pressure test.

8. If the pressure test fails, the Contractor shall make a leakage test by metering the flow of water into the pipe while maintaining in the section being tested a pressure equal to the pressure rating of the pipe. If the average leakage during a two-hour period exceeds a rate of 11.6 gallons per inch of diameter per 24 hours per mile of pipeline, the section shall be considered as having failed the leakage test. For example, if 1,000 feet of 12-inch pipe is to be tested, the allowable leakage is 2.2 gallons over a 2-hour period, calculated as follows:

$$L = \frac{(11.6\text{ gal}) \times (12'') \times (2\text{ hr.}) \times (1000')}{(1'') \times (24\text{ hr.}) \times (5280')} = 2.2\text{ gal}$$

9. If the section fails to pass the pressure and leakage test, the Contractor shall do everything necessary to locate, uncover, and repair or replace the defective pipe, fitting, or joint, all at his own expense and without extension of time for completion of the work. Additional

tests and repairs shall be made until the section passes the specified test.

B. Leakage testing for above-grade/interior pipe and fittings:

1. Prior to the pressure and leakage tests, the piping shall be thoroughly cleaned of all dirt, dust, oil, grease and other foreign material. This work shall be done with care to avoid damage to linings and coating.

2. Except as otherwise required by the Engineer, all pipelines shall be given combined pressure and leakage tests in sections of approved length. The Contractor shall furnish and install suitable temporary testing plugs or caps; all necessary pressure pumps, pipe connections, meters, gates, and other necessary equipment; and all labor required. The Owner or Engineer may monitor the tests using their own gages.

3. Subject to approval and provided that the tests are made within a reasonable time considering the progress of the project as a whole, and the need to put the section into service, the Contractor may make the tests when he desires.

4. The section of pipe to be tested shall be filled with water of approved quality, and all air shall be expelled from the pipe. If hydrants and blowoffs are not available at high points for releasing air, the Contractor shall make the necessary taps at such points, including required excavation and backfilling, and shall plug said holes after completion of the test.

5. The section under test shall be maintained full of water for 24 hours prior to the combined pressure and leakage test being applied.

6. The pressure and leakage test shall consist of first raising the water pressure (based on the elevation of the lowest point of the section under test, corrected to the gage location) to a pressure in pounds per square inch numerically equal to the pressure rating of the pipe. If the Contractor cannot achieve the specified pressure and maintain it for a period of one hour, the section shall be considered as having failed to pass the pressure test.

7. Following or during the pressure test, the Contractor shall conduct a leakage test by metering the flow of water into the pipe while maintaining pressure equal to the pressure rating of the pipe. If the average leakage during a two-hour period exceeds a rate of 11.6 gallons per inch of diameter per 24 hours per mile of pipeline, the section shall be considered as having failed the leakage test.

8. If the section fails to pass the pressure and leakage test, the Contractor shall do everything necessary to locate, uncover, and repair or replace the defective pipe, fitting, or joint, all at his own expense and without extension of time for completion of the work. Additional tests and repairs shall be made until the section passes the specified test.

9. If, in the judgment of the Engineer, it is impracticable to exactly follow the foregoing procedure, modifications in the procedure may be made as required and approved. The Contractor will still be responsible for providing a line, which satisfies the above leakage and pressure requirements.

END OF SECTION

SECTION 33 31 13.37

VALVES AND APPURTENANCES FOR WASTEWATER WORK

PART 1 - GENERAL

1.01 WORK INCLUDED:

A. This section covers furnishing and installation of all valves and appurtenances for wastewater piping as indicated on the drawings and as specified herein.

1.02 RELATED WORK:

A. Section 09 90 00, PAINTING

B. Section 33 31 13.19, DUCTILE IRON PIPE

C. Section 40 05 13.73, PVC PIPE

1.03 REFERENCES:

The following standards form a part of this specification, as referenced:

American Society for Testing and Materials (ASTM)

ASTM	D429	Test Methods for Rubber Property - Adhesion to Rigid Substrates

American Water Works Association (AWWA)

AWWA	C111	Rubber-Gasket Joints for Ductile Iron Pressure Pipe and Fittings
AWWA	C509	Resilient Seated Gate Valves for Water Supply Service
AWWA	C515	Reduced Wall, Resilient-Seated Gate Valves for Water Supply
AWWA	C550	Protective Interior Coatings for Valves and Hydrants

1.04 SUBMITTALS:

A. Shop drawings shall be submitted for valves and appurtenances, indicating type of joint, and lining and coating, etc., in accordance with the specifications.

B. Shop drawings shall consist of manufacturer's scale drawings, or catalog cuts, including descriptive literature with complete characteristics and specifications, and code requirements.

PART 2 - PRODUCTS

2.01 RESILIENT SEATED GATE VALVES:

A. Resilient seated, wedge type gate valves shall be manufactured to meet all applicable requirements of AWWA C509 or C515. Valves 12-inches and smaller shall be bubble-tight at 250 psi water working pressure, tested in both directions.

B. Valve bodies shall be of cast or ductile iron and shall have non-rising threaded bronze stems acting through a bronze stem nut. Opening nuts shall be 2-inches square and shall open counterclockwise. All buried valves shall have mechanical joint ends in compliance with AWWA C111.

C. Valve wedges shall be cast iron with resilient seating surfaces permanently bonded to the wedges in strict accordance with ASTM D429 or attached to the face of the wedges with stainless steel screws. Opening shall be smooth, unobstructed, and without depressions.

D. Valves shall have low friction, torque-reduction thrust bearings. All O-rings and gaskets shall be removable without taking the valves out of service.

E. Valve body, bonnet and O-ring plate shall be coated both on interior and exterior with fusion bonded epoxy meeting applicable requirements of AWWA C550.

F. Resilient seated gate valves shall be as manufactured by Clow Corporation, Oskaloosa, IA; Mueller Co., Chattanooga, TN; Kennedy Valve, Elmira, NY; or be an approved equal.

2.02 PLUG VALVES:

A. Plug valves shall be of the non-lubricated rectangular port; eccentric type with neoprene faced plugs and shall be furnished with flanged joint ends. All valves shall be 100% full port design. Flanged valves shall be faced and drilled to ANSI B 16.1 Class 125. Valve bodies and plugs shall made be of ASTM A 126, Class B cast-iron. All hardware shall be stainless steel. Resilient plug facings shall be neoprene suitable for use with sewage. Valves shall be furnished with corrosion resistant seats, which comply with AWWA Standard C507 and with AWWA Standard C504. Valve shaft seals shall comply with AWWA Standard C507, and with AWWA C504 and shall be replaceable without valve or gear disassembly. Valve packing shall be PTFE.

B. Valves shall provide drip-tight shutoff up to the full pressure rating.

C. All valves shall be hydrostatically pressure tested at 175 psi by the manufacturer.

D. All valves shall be provided with gear actuators and either handwheels or chainwheels, depending upon the mounting height. All valves mounted at six (6) feet or higher above the floor shall be provided with gear actuators and chainwheels. All gear actuators shall be provided with an indicator plate, which shall indicate valve position throughout the operating range. An adjustable stop shall be provided for field adjustment of closure.

E. Where indicated on the Contract Drawings or requested by the Engineer, plug valves shall be furnished with bevel gear nut actuators.

F. Finish above-grade and/or interior valves per section 09 90 00.

G. Plug valves shall be as manufactured by DeZurik Water Controls, Sartell, MN; Clow Valve Company, Oskaloosa, IA, Kennedy Valve, Elmira, NY, or approved equal.

2.03 CHECK VALVES:

A. Unless otherwise specified or approved, all check valves 3-inches and larger shall be 175 lb. W.O.G., flanged, iron body, bronze-mounted, swing type, check valves with bolted covers and equipped with levers and counter-weights. GA Industries Figure 220, or equal.

B. Unless otherwise specified or approved, all check valves 2 1/2-inches and smaller shall be standard all brass or bronze, swing check valves with screwed or solder ends suitable for 150 lb. working steam pressure. They shall conform to Federal Specification WW-V-51D Interim Amendment l, for "Valve Bronze; Angle, Check and Globe 125, 150 and 200 Pound Screwed, Flanged, or Solder (For Land Use), Type IV, Class B."

C. Finish above-grade and/or interior valves per section 09 90 00.

D. Valves shall be made by GA Industries; M & H Valve and Fittings Co.; Walworth Co.; Clow Corp.; or Crane Co.; or equal.

2.04 TIDEFLEX STYLE VALVES:

A. Tideflex valves shall be all rubber and of the flow-operated-check type with a flanged end connection. The port area shall contour down to a duckbill, which shall allow passage of flow in one direction while preventing reverse flow. The flange and flexible duckbill sleeve shall be one-piece rubber construction with nylon reinforcement. The bill portion shall be thinner and more flexible than the valve body and formed into a curve of 180°.

B. The flange drilling shall conform to ANSI B16.1 Class 125/ANSI B16.5, Class 150 standards. The valve shall be furnished with stainless steel back-up rings for installation.

C. Manufacturer shall have available flow test data from an accredited hydraulics laboratory to confirm pressure drop data. Company name, plant location, valve size and serial number shall be bonded to the valve.

D. When line pressure inside the valve exceeds the backpressure outside the valve, the line pressure shall force the bill of the valve open, allowing flow to pass. When backpressure exceeds the line pressure, the bill of the valve shall be forced closed.

E. All Tideflex valves shall Series 35-1 as manufactured by Tideflex Technologies; General Rubber Corp., Carlstadt, NJ, or approved equal.

2.05 BALL VALVES

A. All ball valves shall be flanged and manufactured to the following standards:

a. Body: ASTM A351 Gr.CF8M, WCB as option
b. Ball: SS316 or SS304
c. Stem: SS 316 or SS304
d. Seat&Seal: PTFE as Standard
e. Face-to-Face: ANSI B16.10, DIN3202 and JIS B2002
f. Flange Dimensions: ANSI B16.5, DIN2632/2633 & DIN2634/2635 and JIS B2212/2214
g. Working Pressure: Class 150/300, PN10-40, JIS 10k/20k
h. Temperature Range: -20°F (-29°C)- 450°F(232°C)
i. TEST Standard: API598, ISO5208, and JIS B2003

2.06 VALVE BOXES:

A. All buried valves shall be provided with a box. Covers shall be close fitting and dirt-tight. The top of the cover shall be flush with the top of the box rim and marked "Sewer".

B. Valve boxes shall be of cast iron and of the adjustable threaded or sliding, heavy pattern type. They shall be so designed and constructed as to prevent direct transmission of traffic loads to the pipe or valve. The upper section of the box shall be provided with a flange having sufficient bearing area to prevent undue settlement. The lower section and stuffing box shall be designed to enclose the operating nut and stuffing box of the valve and rest on the backfill. The boxes shall be adjustable through at least 6-inches vertically without reduction of lap between sections to less than 4-inches.

C. The inside diameter of boxes shall be at least 4-1/2-inches and the lengths shall be as necessary to suit the ground elevation and the depth of each valve.

2.07 HANGERS AND SUPPORTS

A. The Contractor shall furnish and install all supporting devices necessary or required to support all valves and appurtenances in a safe, firm and substantial manner at the locations indicated or as required in a manner to prevent the loads of valves and appurtenances from being carried on pumps, pipes or other equipment.

B. Plug valves in horizontal pipelines shall be installed with shaft in horizontal position so that with valve in open position the plug is located in the upper part of the valve body. The valves shall be oriented so that with valve in closed position; the plug is at the upstream end of the valve.

C. Install hangers and supporting devices necessary or required to hold all valves and appurtenances in a safe, firm, and substantial manner at the positions indicated or as required and to prevent the loads of valves and appurtenances from being carried on pumps or other equipment.

PART 3 - EXECUTION

3.01 INSTALLATION:

A. All material shall be carefully inspected for defects in workmanship and material, and all debris and foreign matter shall be cleaned out of valve openings and seats. Operating mechanisms shall be operated to check for proper functioning, and all nuts and bolts shall be checked for tightness.

B. Valves and other equipment which do not operate easily or are otherwise defective shall be repaired or replaced at the Contractor's expense.

C. All valves shall be carefully installed and supported in their respective positions, free from all distortion and strain. Care shall be taken to prevent damage or injury to the valves and appurtenances during handling and installation.

D. Valve boxes shall be set plumb, flush with the ground or paved surface, and centered directly over the operating nut of the valves. Earth fill shall be carefully tamped around the valve box to a distance of 4 feet on all sides of the box or to undisturbed trench faces if less than 4 feet.

E. Valves shall be operational and accessible at all times during construction and warranty period. The Contractor shall verify the proper operation of all valves in the presence of the Engineer and/or Owner following completion of the project and prior to the acceptance of Substantial Completion.

END OF SECTION

P:\RI\Woonsocket, RI\ENG23-0204 - WWTF GT Internal Upgrades\Specifications\2 - First Draft Specs\33 31 13.37 - VALVES AND APPURTENANCES FOR WASTEWATER WORK.docx

SECTION 40 05 13.73

PLASTIC PROCESS PIPE AND FITTINGS

PART 1 - GENERAL

1.01 WORK INCLUDED:

This section specifies all exposed pipe and fittings, complete.

1.02 RELATED WORK: NOT USED

1.03 REFERENCES:

The following standards form a part of this specification and indicate the minimum standards required:

American Society for Testing and Materials (ASTM)

ASTM	D1784	Rigid Poly (Vinyl Chloride) (PVC) Vinyl Compounds and Chlorinated Poly (Vinyl Chloride) (CPVC) Compounds
ASTM	D1785	Poly (Vinyl Chloride) (PVC) Plastic Pipe, Schedules 40, 80, and 120
ASTM	D2464	Threaded Poly (Vinyl Chloride) (PVC) Plastic Pipe Fittings, Schedule 80
ASTM	D2467	Socket-Type Poly (Vinyl Chloride) (PVC) Plastic Pipe Fittings, Schedule 80
ASTM	D2564	Solvent Cement for Poly (Vinyl Chloride) (PVC) Plastic Pipe and Fittings

American National Standard Institute (ANSI)

ANSI	B1.20.1	Pipe Threads (Except Dryseal)
ANSI	B16.5	Pipe Flanges and Flanged Fittings

1.04 SUBMITTALS:

A. Shop drawings consisting of manufacturer's cuts or catalogs including descriptive literature, complete characteristics, and code requirements.

B. Written report certifying testing of all process plastic pipe.

PART 2 - PRODUCTS

2.01 POLYVINYL CHLORIDE PIPE AND FITTINGS:

A. Unless specifically designated otherwise, PVC pipe and fittings shall be Schedule 80 with solvent weld joints as specified herein.

B. PVC Schedule 80 pipe shall conform to ASTM D1785.

C. PVC Schedule 80 socket fittings shall conform to ASTM D2467 and PVC Schedule 80 threaded fittings to ASTM D2464.

D. Rigid PVC used in the extrusion of the pipe and fittings shall be Type 1, Grade 1 compound as stated in ASTM D1784 with a cell classification of 12454B.

E. Both pipe and fittings shall be the product of one manufacturer.

F. Solvent cements shall conform to ASTM D2564.

G. All valve connections shall be flanged.

H. Gasket seals between the flange faces should be Viton full flat-faced gasket 1/8-inch thick.

I. Provide flanged joints for all solution systems in each straight run of pipe, 25 feet apart.

2.02 FLEXIBLE PLASTIC CONNECTIONS:

A. All connections between the chemical proportional feed pumps and the rigid PVC pipe shall be of flexible plastic hose.

B. Hose shall consist of polyester braided reinforced tubing with a minimum rating of 150 psi.

2.03 SPRAY NOZZLES

A. Spray nozzles shall be 316 stainless steel, designed to the following conditions:

a. 110 degree fan spray angle
b. ½" NPT

B. Connect to spray nozzle using Sch 80 PVC PVC to ½" NPT transition piece

C. Manufacturer: Bete Spray Technology Nozzle BJ70 model no. 1/2FBJ70110-NS@7 or equal.

2.04 HINGED PIPE CAPS & COVERS

A. For sampling tube/stand pipes, provide a hinged cover for easy access for sampling.

B. Cover to be hinged and latchable with a spring loaded clasp and lever, or equal.

C. Manufacturer: Buyers Products 3016382 or equal.

D. Compatible with 6” Sch 40 PVC

E. Material: PVC, Aluminum, or stainless steel.

PART 3 - EXECUTION

3.01 INSTALLATION:

A. Install piping in a neat and workmanlike manner.

B. Install lines inside of buildings parallel to the building walls and ceilings wherever possible.

C. Install pipes to accurate lines and grades.

D. Support pipe by approved hangers as required but at intervals no greater than 3 feet.

E. All pipes shall be sloped so as to be self-draining.

END OF SECTION

P:\RI\Woonsocket, RI\ENG23-0204 - WWTF GT Internal Upgrades\Specifications\2 - First Draft Specs\40 05 13.73 - PVC Pipe.docx

SECTION 46 71 13.01 (For Reference)

GRAVITY THICKENER MECHANISM SUPPLY

This specification section is for reference only. The mechanism was/is being pre-purchased by the City and will be installed by the Contractor of this project contract. The City will arrange for a proper storage location on site for the Installation Contractor to unload upon arrival and install at a later date. This document references the "Installation Contractor" throughout. The "Supplier" is referenced as the manufacturer of the equipment involved with the pre-purchasing. Approved submittals/shop drawings have been provided and are attached to this specification section.

PART 1 GENERAL

1.1 SCOPE OF WORK

A. Supplier shall provide a price proposal to supply one (1) gravity thickener mechanism, complete with center drive, center support column, influent feed well, sludge collector mechanism, effluent weir and launder assembly, skimmer and scum box, assembly hardware, anchor bolts, bridge, walkway (sized to support influent piping loads), walkway handrail, disconnect switch, control panel, and all accessories and appurtenances specified or otherwise required for a complete and properly operating installation within the existing gravity thickener tank.

B. The mechanism shall employ an electric motor and gear drives with a mechanical torque sensor and alarm or a hydraulic drive unit with hydraulic pressure torque sensor with alarms. The specifications for each of these drive types are included within this document as "Base: Drive Option 1" and "Alternate: Drive Option 2". If a manufacturer offers both options, please provide complete pricing and information for both, clearly delineating any and all differences in system design. *All specification language pertaining to the Alternate Proposal is shown in italicized font.*

C. Manufacturing and delivery of all required components to the Woonsocket Wastewater Treatment Facility at 11 Cumberland Hill Rd, Woonsocket, RI 02895. Owner shall identify an acceptable temporary storage location prior to delivery. Supplier shall coordinate delivery with installation Contractor for offloading of all equipment and provisions for temporary storage to protect the equipment from damage until it is installed. The Installation Contractor will be responsible for offloading the equipment and storing it on site prior to installation.

D. This specification section covers only the supply and startup services of the equipment. The City will bid a separate contract for the installation of the mechanism at a future date. The City will share the contact information of the future installation contractor with the awarded mechanism Supplier.

E. Suppliers shall also provide the necessary startup, assistance, and training services described within these specifications as a minimum. Any additional installation and or startup assistance necessary to maintain the manufacturer's equipment warrantee shall be specifically described and included as a separate bid price line item.

F. This equipment will be pre-purchased by the City of Woonsocket, and installed by the future awarded Contractor once the materials arrive on site.

G. Supplier shall coordinate with Contractor for startup and testing services once the equipment is installed.

1.2 RELATED SECTIONS

A. SECTION 46 71 13.02 Gravity Thickener Mechanism Installation (By Others)

1.3 SUBMITTALS

A. Provide shop drawings and product data for the equipment being furnished, to include at minimum the following:

1. Certified shop drawings showing the details of construction, dimensions and anchor bolt requirements.
2. Complete wiring diagrams detailing all required field connections.
3. Descriptive literature, brochures, and/or catalogs of submitted equipment.
4. Calculations showing the structural capability of the thickener mechanism including all connection to existing structures to withstand all static and dynamic operating loads including the momentary peak torque.
5. Complete bill of materials for the equipment.
6. List of Manufacturer's recommended spare parts.
7. Calculations substantiating the continuous torque rating of the main gear set in accordance with standard ANSI / AGMA 2001.
8. Operation and maintenance manuals
9. Manufacturer's valid ISO 9001:2008 certificate of registration
10. Equipment weights and lifting points.
11. Short and long term storage requirements.
12. Manufacturer's installation instructions.
13. Installation Reference Lists
14. Valid Welder Certifications
15. A copy of Manufacturer's factory warranty.

1.4 REFERENCE STANDARDS

A. American Iron and Steel Institute (AISI).

B. American National Standards Institute (ANSI).

C. American Society for Testing Materials (ASTM).

D. American Bearing Manufacturers Association (ABMA).

E. American Gear Manufacturers Association (AGMA).

F. National Electrical Manufacturers Association (NEMA).

G. Underwriters Laboratory (UL).

1.5 QUALITY ASSURANCE

A. Qualifications: Qualified Manufacturers shall have a minimum of 25 years' experience manufacturing gravity thickeners, with no fewer than 100 operating installations of the type specified herein located in the USA. Manufacturer shall provide a list of 5 names and dates of installations for verification by the Owner.

B. A single manufacturer shall provide all components including but not limited to the thickener, rake/picket mechanism, integral scum skimming system, drive unit, all related supports, and walkway as a complete integrated package to ensure proper coordination, compatibility, and operation of the system.

C. Thickener shall be Manufacturer's standard product and only modified as necessary to comply with the drawings, specifications, and specified service conditions.

D. All welding is performed in accordance with American Welding Society (AWS) Structural Welding Code.

E. All stainless steel components shall undergo a passivation process to ensure maximum resistance to corrosion. All stainless steel surfaces shall be thoroughly cleaned and glass bead-blasted to a minimum SSPC-SP-6 finish. The use of nitric and hydrofluoric acid passivation is not acceptable due to the negative impact these chemicals have on the environment.

F. Supplier shall guarantee all equipment against faulty or inadequate design, improper assembly or installation, defective workmanship or materials, and breakage or other failure. Materials shall be suitable for service conditions. The tank and Mechanism will be covered by a flat aluminum cover (supplied by others). The cover shall be installed below the walkway and shall be supported independently from the mechanism.

G. All equipment shall be designed, fabricated, and assembled in accordance with recognized and acceptable engineering and shop practices. The fabrication shall be performed by the equipment manufacturer at the manufacturer's facility located within the continental USA; all welding shall be performed by direct employees of the manufacturer, each welder shall be certified in accordance with AWS or ASME. Welder certificates shall be provided to the Engineer upon request.

H. Each thickener mechanism shall have the Manufacturer's name, address, and product identification information on a corrosion resistant nameplate securely affixed to the equipment.

I. Thickener manufacturer shall be ISO 9001:2008 certified and provide the Engineer with a copy of a valid certificate of registration.

1.6 WARRANTY

A. The equipment shall be warranted by the manufacturer for a period of two (2) year from the date of shipment or one (1) year from the date of startup, whatever is sooner.

1.7 DELIVERY, STORAGE, AND HANDLING

A. Shipping

1. Ship equipment, material, and spare parts complete except where partial disassembly is required by transportation regulations or for protection of components.

2. Pack spare parts in containers bearing labels clearly designating contents and equipment for which they are intended.

3. Ship all components in protective packaging that would warrant storage for a period up to 6 months, if necessary.

B. Receiving and Storage:

1. Installation Contractor is responsible for offloading equipment and materials and placing them into the temporary storage location designated by the City.

2. Store and safeguard equipment, material, and spare parts. All spare parts must be stored in accordance with manufacturer's recommendations.

1.8 SUBMITTALS

A. GENERAL:

1. The Supplier shall submit the shop and working drawing submittals electronically.

B. ELECTRONIC SUBMITTALS:

1. In accordance with the accepted schedule, the Supplier shall submit promptly to the Engineer & City by email (Stuyvesant.jarod@wseinc.com & jpratt@woonsocketri.org) one electronic copy in Portable Document Format (PDF) of shop or working drawings required as noted in the specifications, of equipment, structural details and materials fabricated especially for this Contract.

2. Each electronic copy of the shop or working drawing shall be accompanied by a shop drawing transmittal form, on which is a list of the drawings, descriptions and numbers and the names of the Owner, Project, Supplier and building, equipment or structure.

3. The Supplier shall receive a shop drawing memorandum with the Engineer's approval or comments via email.

C. SHOP AND WORKING DRAWINGS:

1. Shop and working drawings shall show the principal dimensions, weight, structural and operating features, space required, clearances, type and/or brand of finish of shop coat, grease fittings, etc., depending on the subject of the drawings. When it is customary to do so, when the dimensions are of particular importance, or when so specified, the drawings shall be certified by the manufacturer or fabricator as correct for this Contract.

2. All shop and working drawings shall be submitted to the Engineer by and/or through the Supplier, who shall be responsible for returning reviewed drawings to them. All shop and working drawings shall be prepared on standard size, 24-inch by 36-inch sheets, except those, which are made by changing existing standard shop or working drawings. All drawings shall be clearly marked with the names of the Owner, Project, Supplier and building, equipment or structure to which the drawing applies, and shall be suitably numbered.

3. Shop drawings shall be reviewed and marked with the date, checker's name and indication of the Supplier's approval. Shop drawings submitted to the Engineer without the Supplier's approval stamp and signature will be rejected. Any deviation from the Contract Documents indicated on the shop drawings must be identified on the drawings and in a separate submittal to the Engineer, as required in this section of the specifications and General Conditions.

4. The Supplier shall be responsible for the prompt submittal and resubmittal, as necessary, of all shop and working drawings so that there will be no delay in the work due to the absence of such drawings.

5. The Engineer will review the shop and working drawings as to their general conformance with the design concept of the project and general compliance with the information given in the Contract Documents. Corrections of comments made on the drawings during the review do not relieve the Supplier from compliance with requirements of the Contract Documents. The Supplier is responsible for: confirming and correlating all requirements of the specifications.

6. With few exceptions, shop drawings will be reviewed and returned to the Supplier within 14 days of submittal.

1.9 OPERATION AND MAINTENANCE MANUALS

A. The Supplier shall provide four (4) hard copies of Operation & Maintenance Manuals and an electronic searchable PDF O&M manual. The manufacturer shall be responsible for supplying written instructions, which shall be sufficiently comprehensive to enable the operator to operate and maintain the mechanism and all equipment supplied by the

manufacturer. Said instructions shall assume that the operator is familiar with pumps, motors, piping, and valves, but that they have not previously operated and/or maintained the exact equipment supplied.

These instructions shall be prepared as a systems manual applicable solely to the mechanism and equipment supplied by the manufacturer to these specifications, and shall include those devices and equipment supplied by it. However, items of equipment for which the manufacturer has made mounting or other provisions, but which it has not supplied, may be excluded from these instructions.

These instructions shall include, but not be limited to, the following:

1. Descriptions of, and operating instructions for, each component of the mechanism as supplied.

2. Instructions for operation of the mechanism in all intended modes of operation.

3. Instructions for all adjustments which must be performed at initial startup of the mechanism, and adjustments which must be performed in the course of preventive maintenance as specified by the manufacturer.

4. Instructions for the adjustment, calibration, and testing of selected electronic components or assemblies, normally replaceable by the manufacturer, whose performance is not ascertainable by visual inspection.

5. Service instructions for major components not manufactured by the manufacturer but which are supplied by it in accordance with these specifications. Incorporation of literature produced by the actual component manufacturer shall be acceptable.

6. Electrical schematic diagram of the mechanism as supplied, prepared in accordance with NMTBA and JIC standards. Schematics shall show motor branch, control, and alarm system circuits, and interconnections among these circuits. Wire numbers shall be shown on the schematics. Schematic diagrams for electronic equipment, the detail parts of which are normally not repairable by the operator, need not be included, and shall not be substituted for an overall schematic diagram. Partial schematics, block diagrams, and simplified schematics shall not be provided in lieu of an overall schematic diagram.

7. Layout drawing of the mechanism as supplied, prepared in accordance with good commercial practice, showing the locations of all equipment.

   Operation and maintenance instructions which are limited to a collection of component manufacturer literature without overall thickener instructions will not be acceptable.

   Operation and maintenance instructions shall be specific to the equipment supplied in accordance with these specifications. Instruction manuals applicable to many different

configurations and thickeners, and which require the operator to selectively read portions of the instructions, will not be acceptable.

PART 2 PRODUCTS

2.1 ACCEPTABLE MANUFACTURERS

A. Thickener Mechanism shall be in compliance with these specifications and shall be supplied by one of the following manufacturers:

1. Kusters Water, Spartanburg, SC
2. WesTech Engineering, Salt Lake City, UT
3. Walker Process Equipment, Aurora, IL

B. The City reserves the right to choose the manufacturer based on qualifications, price, references, and/or operational preference.

2.2 GRAVITY THICKENING EQUIPMENT

A. GENERAL DESIGN FABRICATION REQUIREMENTS

1. Structural Steel: ASTM A-36 and shall conform to requirements of the AISC "Speciation of the design, fabrication and erection for structural steel for buildings" Latest edition, except that the maximum allowable stress for the loading conditions of any member shall be 2/3 the value allowed by the AISC.

2. All non-stainless steel components shall be factory primed prior to delivery with 2 coats of Tnemec Series 66 Epoxy Primer, with a total primer thickness of 6-10 mils DFT.

3. Thickness of Structural Steel shall be no less than ¼ inch.

4. All Structural Steel shall be factory primed before shipment.

5. Welding: All A-36 steel, both submerged and non-submerged, shall be continuously seal welded. Stitch or skip welding is not permitted.

6. The thickener components shall be designed for all bolted connections, field welding will not be permitted.

7. The manufacturer shall ensure the manufacturer furnished anchor bolt templates are properly designed for the application.

8. Edge Grinding: Sharp projections of cut or sheared edges of ferrous metal shall be ground to a radius by a power grinder as required to ensure satisfactory coating adhesion.

B. DESIGN CRITERIA

Average TSS of Thickened Blanket (mg/L):	40,000
Max. TSS of Thickened Blanket (mg/L):	100,000 or 10% solids
AGMA Rated Continuous Torque (ft-lbs):	36,000
Momentary Peak Torque:	2x Continuous
Minimum Main Gear Pitch Diameter (in):	30
Minimum Main Bearing Diameter (in):	35
Tip Speed (ft/ min):	8
Tank Diameter (ft):	60
Sidewater Depth (ft):	14'-7"
Floor Slope (in/in):	1¾ : 12
Feedwell Diameter (ft):	9
Feedwell Depth (ft):	4 to 5
Top of Vertical Sludge Pickets at Wall (ft):	9
Vertical Sludge Picket Spacing (in):	24
Minimum Drive Motor Horsepower:	1.5
Operational Environment:	Non Hazardous (Above Cover)
Stainless Steel Hardware Grade:	316
Center Column Diameter (in):	18

Refer to the preliminary drawing at the end of these specifications for the proposed mechanism and bridge dimensions within the existing tank structure.

C. PERFORMANCE AND DESIGN REQUIREMENTS

1. All components shall be designed and manufactured so the thickener can withstand the structural force exerted by momentary peak torque. All structural and functional parts shall be adequately sized to prevent deflection and vibration which could impair operation.

D. THICKENER COMPONENTS

1. Center Column

   a. The center column shall Support entire sludge collector mechanism including inboard end of the access bridge; sized and designed by collector manufacturer. Minimum wall thickness of 1/4 inch; mounted at center of basin. Shall be provided and designed to support all required static and dynamic loads. The column shall be designed for 2 times the continuous operating torque identified in section 2.2.B.

   b. The bottom of the column shall have a bolting flange for anchorage to the concrete tank using stainless steel anchor bolts. The Manufacturer shall provide a steel

template/grout shield to accurately locate anchors and allow for grouting beneath the pier after final plumbing.

c. The column shall have gusset plates located at the top and bottom flanges for added strength.

2. Center Drive Cage

a. The drive cage shall be a steel box truss capable of carrying dead load of rake arms plus its own dead load, as well as design total torque assuming entire design torque is distributed uniformly along each rake arm: bolted to spur gear assembly that rotates center cage; bolted to rake arms and influent well hangers (if used).

b. Structural calculations shall be provided verifying the structural ability of the drive cage. The cage shall be designed for 2 times the continuous operating torque identified in Table 2.2.B.

3. Feedwell

a. Welded steel concentric with center column supported by center cage or access bridge; top edges approximately 4 inches above tank water surface. Size shall be as identified in Table 2.2.B. Minimum steel thickness ¼".

b. Four baffled slots at liquid level to permit removal of floating material in well; 12 inches long; extending 2 inches below low-water level.

c. Feedwell plate sections shall be designed to bolt together.

4. Rotating Rake Arms

a. Each designed for 2 times the continuous torque identified is Table 2.2.B. Total torque shall be assumed to be distributed uniformly along each rake arm.

b. Rake arm design shall conform to slope of tank floor; consisting of structural steel triangular or box trusses attached rigidly to the center cage. Shall not incorporate use of any tie rods; self-supporting and without tie rods.

c. Flights shall be a minimum 4" deep and shall provide full floor coverage of the entire radius on each arm.

d. Stainless steel squeegees shall be provided on each blade, and shall allow for 2-inches of vertical adjustment. Squeegees shall be attached with stainless steel hardware.

e. Vertical pickets shall be provided for each rake arm. The pickets shall be designed to enhance thickening. Spacing shall be no less than 2ft. centers. The pickets shall extend to 9 ft above the floor measured at the outer wall.

5. Walkway and Service Platform

    a. Welded steel truss or beam bridge construction and composed of two main members laterally braced together. UHMW-PE slide plates and anchor bolts for wall support shall be provided.

    b. Bridge shall be capable of supporting dead loads plus minimum walkway live load of 50 pounds per square foot with deflection of maximum L/360 of span for dead load plus live loads; cambered for 1/3 live load plus dead load. Bridge shall also be designed to carry the loads of a 6", 8", and 14" ductile iron pipe, each full of water, along the entire length of the bridge, suspended from the beams. Refer to the preliminary drawing at the end of this section.

    c. Walkway shall be supported at the drive service platform and the concrete wall. The service platform shall be located around the center drive and provide a minimum clearance of 1 feet 6 inches around all sides of the drive mechanism. Walkway shall have a minimum of 36" clearance between handrails.

    d. Handrail: The walkway and platform shall be provided with mechanical handrail 42" high, double row 1.5" diameter aluminum pipe, and 0.25" x 4" kickplates on both sides. Walkway trusses may serve as the handrail if the top chord is 3'-6" above the walking surface.

    e. Decking: The entire walkway shall be covered with aluminum I-bar grating, 1.25" thick, attached with aluminum grating clips and stainless steel hardware. The service platform shall be covered with 0.25" aluminum checkered plate.

6. Effluent Weir and Launder Assembly

    a. A rectangular FRP effluent launder shall be provided around the perimeter of the tank. The launder shall be 12" wide and 18" deep, sloped at 0.5% each direction around the tank, from the high point to the overflow outlet pipe. FRP v-notch weirs shall be provided affixed to the effluent launder. The v-notches of the weirs shall remain at a consistent elevation around the entire tank in order to maintain a constant water surface elevation of 143.00 at an average overflow rate of 310 gpm distributed evenly around the entire circumference of the tank. All hardware shall be 316 stainless steel. Assembly must be capable of bolting to existing concrete walls.

7. Skimmer and Scum Removal

    a. A surface skimming system shall be provided and consist of two (2) skimming arms with skimmer heads, and a scum collection box.

b. The thickener shall be equipped with two skimmer full radius arm assemblies to collect and discharge surface scum into a scum collector box cantilevered from the tank wall.

c. Each skimmer arm shall be a fabricated tube assembly connected to the center cage and cantilevered from the rotating feedwell. Tie rods shall be properly located to allow adjustment of the skimmer arm as well as to resist horizontal forces.

d. Each skimmer arm shall be equipped with a hinged ½" inch 65 durometer neoprene wiper blade extending the full width of the arm. The neoprene blade shall be fastened to the arm with stainless steel fasteners with steel back-up bars. Each skimmer arm shall be equipped with brushes with synthetic bristles on the end that will brush the effluent v-notch weirs in an effort to keep them clean from debris.

e. The scum collector box shall be fabricated from 1/4 inch steel plate. The box and support structure should be designed for all dead loads plus a 200 hundred pound point load at the feedwell end of the trough with no more than 1/2 inch deflection. The approach ramp of the trough shall be of radial design, having a tapered width and a variable slope that will enable the full length of the skimmer wiper to make simultaneous and continuous contact with the entire ramp along a radial line, at each revolution of the skimmer arm. The trough shall be 8 inches wide with a uniformly sloped bottom to allow scum to discharge towards the tank wall. Fabrication of the trough shall be true and free of warpage. An 8-inch flange, ANSI B16.1, connection shall be provided as shown on the drawings for the outlet of scum to be routed via a newly installed pipe.

f. The thickener equipment manufacturer shall furnish a flush valve assembly for automatic flushing of the scum box and scum pipe. The flush valve assembly shall allow approximately 0 to 20 gallons of clarified effluent to enter the box as the skimmer assembly passes over the scum box. It shall consist of an actuator bar and a pivoting assembly that will open the valve. A counterweight shall return the ball to its closed position after the flush cycle. The flush valve shall be a minimum 2-1/2" plunger valve.

g. An auto flush valve assembly shall be provided and mounted on the scum box. The valve body and parts shall be corrosion resistant material of either stainless steel or brass. The valve shall automatically open and close with each pass of the skimmer arm. The seal shall be a BUNA-N rubber type and properly seal without leakage. The duration and volume of flush water shall be adjustable.

h. The scum trough shall be provided with an 8" outlet flange, ANSI B16.1.

8. Base Proposal: Center Drive Mechanism "Base: Drive Option 1"

a. Design Parameters: The drive unit shall be designed and manufactured by the thickener equipment Supplier to ensure unit responsibility. The drive unit shall be designed for the torque values previously listed. It shall turn the mechanism at the design collector tip speed. The drive main bearing shall be designed for the total rotating mechanism loads with a minimum L 10 life of 50 years or 438,000 hours. The drive unit shall be capable of producing and withstanding the previously listed momentary peak torque while starting. The drive main gear shall be designed to a minimum AGMA 6 rating when rated in accordance with the latest AGMA standard. Gear teeth shall be designed for proper load distribution and sharing. The main bearing shall be capable of withstanding the listed overturning moment without the aid of any underwater guides or bearings to ensure correct tooth contact for AGMA rating of the main gear.
    i. All spur gearing shall be designed to the latest AGMA spur gear standard for strength and surface durability, based on a life of 175,000 hours. The design running torque rating of the drive gearing shall be based on the smaller of the strength and durability values determined from the above AGMA standard. To ensure safety and ease of maintenance, all components of the drive shall be direct coupled.
    ii. No overhung pinions shall be allowed on the speed reducing unit. The lower pinion bearing shall not be located below the turntable base.
    iii. All welding on the drive unit shall be done using E70XX weld rod.

b. Physical Characteristics: The drive unit shall consist of a solid internal main spur gear, bearing turntable, pinion, secondary speed reducer, support base, and drive unit bearing. The drive shall be mounted on the center column and support the entire rotating load of the mechanism. The main internal gear shall be forged of alloy hardened steel. The pinion shall be heat treated alloy steel. Support base for the drive shall be of welded steel to assure rigidity. Dust shields shall be provided. The drive bearing shall include a forged steel precision gear/bearing set, with fully contoured raceways hardened to a minimum 58 62 Rc and protected by a neoprene seal. The drive shall be designed so that the balls and nylon spacers can be replaced without removing the access walkway. The main gear to pinion gear mesh shall be oil lubricated. An oil sight glass, fill pipe, and drain shall be provided for the reservoir. Lubrication fittings shall be readily accessible.

c. Overload Protection: An overload device shall be provided in a stainless steel, weatherproof enclosure. The device shall be actuated by torque generated from the main drive, which shall operate two independently adjustable switches (the alarm switch at 100 percent of design running torque and the motor cutout switch at 120 percent of design running torque). These two switches shall be factory adjusted to accurately calibrate the alarm torque value and the overload position. A visual torque indicator shall be provided and oriented so that it may be read from the walkway. It shall be calibrated from 0 to 160 percent of design running torque.

d. Turntable: The turntable base shall have an annular bearing raceway upon which the rotating assembly rests. It shall have a maximum allowable deflection in accordance with the bearing specifications. The allowable modulus of elasticity shall be a minimum of 29 x 106 psi. The center cage shall be fastened to and

supported from the gear casing. Ball bearings shall be of high carbon chrome alloy 52100 steel running in fully contoured races, as part of a precision gear/bearing set. The balls shall be grease lubricated and protected by elastomer seals. Felt seals that allow the entrance of moisture from outside the drive (i.e., rainwater, condensate, etc.) will not be allowed.

e. Speed Reducing Unit: The speed reducing unit shall consist of cycloidal, helical, or planetary speed reducers directly connected to a motor without the use of chains or v belts and shall be keyed to the pinion.
   i. The main ring gear of cycloidal drives shall be made of high carbon chromium bearing steel and be fixed to the drive casing. An eccentric bearing on the high-speed shaft shall roll cycloidal discs of the same material around the internal circumference of this main ring gear. The lobes of the cycloid disc shall engage successively with pins in the fixed ring gear. The movement of the cycloid discs shall be transmitted then by pins to the low-speed shaft. Speed reducer efficiency shall be a minimum of 90% per reduction stage.
   ii. Speed reducer helical or planetary gearing shall be manufactured to AGMA standards and shall provide at least 95% power transmission efficiency per stage. The speed reducer shall have a minimum service factor of 1.25 based on the output torque rating of the drive.
   iii. The reducers shall be fitted with radial and thrust bearings of proper size for all mechanism loads and be grease lubricated. As a safety feature, the speed reducer shall be back drivable to release any stored energy as the result of an over torque condition.

f. Motor: The motor shall be a squirrel cage, induction type, TEFC, ball bearing heavy duty unit of ample power for starting and operating the mechanism without overload, with a minimum service factor of 1.15. Power supply to the equipment shall be 240/480-volt, 60 hertz, 3 phase.

9. Alternate Proposal: Center Drive Mechanism "Alternate: Drive Option 2"

a. General: The center thickener drive mechanism shall consist of an electrical motor, primary reducer, intermediate gear reducer and a main gear set consisting of a spur pinion and internal tooth spur gear.

b. Motor: The thickener drive shall be driven by an electric motor. The motor shall be UL rated for the operational environment as specified in Table 2.2 B. The motor shall be rated for 230/460V, 60 Hz, 3-phase operation with a minimum service factor of 1.15.

c. Primary Reducer: A primary hydraulic reducer shall transmit torque to the intermediate reducer and provide overload protection. The hydraulic system shall be self-contained, and fully enclosed in a 304 stainless steel enclosure. The enclosure shall also function as the fluid reservoir and shall provide a minimum 8 gallon capacity. The hydraulic system shall include: a hydraulic motor, a hydraulic pump, an aluminum manifold assembly, a flow directional valve, a

pressure relief valve draining back to hydraulic reservoir, an oil filter assembly, an oil filter replacement indication gage, a 6-inch diameter glycerin filled torque indication gage and all necessary hoses and fittings.

d. *Intermediate Reducer: The intermediate reducer shall be a planetary type, providing no less than 90% gear efficiency. All lubrication of the planetary gearing shall be oil. Grease lubrication is not permitted. The planetary reducer shall be designed for a 200,000 hr. service life at the rpm and torque specified in Table 2.2.B. The output shaft of the intermediate reducer shall be keyed to a heat treated spur pinion.*

e. *Final Reducer: The main gear shall include an internal tooth spur gear and spur pinion. The main gear material shall be forged alloy steel, induction hardened to a minimum 53Rc. The pinion shall be constructed from AISI 4150 steel, hardened to a minimum 340 Bhn.*

f. *Turntable Base: Fabricated Steel, ASTM A36, minimum 36,000 psi tensile strength; able to be bolted to center column and to provide support for internal spur gear, the entire rotating collector mechanism and one end of the access bridge. Cast iron housing are not permitted.*

g. *Main Bearing: The main bearing shall consist of hardened steel chrome ball bearings and nylon spacer (1" minimum), each riding on a contoured, hardened steel raceway set as part of a precision bearing. The main bearing diameter shall be as identified in Table 2.2.B of these specifications. The main bearing shall be designed for a minimum B-10 life of 200,000 hours based on ABMA standards when operating at the maximum continuous output torque and rpm of the mechanism.*

h. *Torque Overload Protection: The thickener drive shall include a hydraulic torque overload protection system. Mechanical overload devices are not permitted due to their inherent inaccuracy. Two overload switches shall be provide, one for "alarm" set at 100% of the continuous torque identified in Table 2.2.B, and one for "motor cut-off" set at 130% of the continuous torque identified in Table 2.2.B. Additionally a pressure relieve valve shall be provided set at 150% of the continuous torque identified in Table 2.2.B. All switches shall be current rated for 120 VAC. Each switch shall be NEMA rated for the specified environment identified in Table 2.2.B of these specifications. The torque indication gage shall be 6 inches in diameter, glycerin filled with a scale that displays actual operating torque (ft-lbs or N-m).*

i. *Condensate Removal: A condensate removal system shall be included to automatically remove condensate from the main gear housing. The condensate system shall include a 1" galvanized steel piping with vertical stem. The pipe arrangement shall be designed to provide constant removal of condensate from the main gear housing. A minimum of 6" clearance shall be provided below the low point drain to allow for easy access by plant personnel.*

j. Coatings: Thickener drive mechanism shall be factory primed and finish coated with at least 2 coats (2-3 mils per coat, minimum DFT) of Tnemec epoxy (primer: Series 66, finish: Series 66HS – safety gray) prior to shipment.

2.3 CONTROLS AND INSTRUMENTATION

A. GENERAL

1. The thickener control panel shall be the Supplier's standard UL listed enclosure and wired for 230/460 volts, 3-phase, 60 Hz electrical service. The enclosure shall be furnished completely pre-wired internally and tested, requiring only mounting and connection to field mounted electrical devices and the drive unit. The control panel shall include all equipment required to control the thickener specified herein. Panel shall be shipped loose for mounting location to be determined.

2. The control panel enclosure shall be NEMA rated for the specified environment identified in Table 2.2.B of these specifications. The enclosure shall house the control devices, relays, terminal blocks, and motor starter. All hinges and latches shall be corrosion-resistant.

B. OPERATION

1. The control system shall be equipped with one (1) ON / OFF position selector switch. In the Off mode the thickener drive will not run. In the ON mode the thickener drive shall run continuously. The following items shall be included in each control panel.

    a. Thickener run light (green)
    b. Torque "alarm" light (amber)
    c. Torque "motor cut out" light (red)
    d. UL 508 Listed industrial controls label
    e. "Alarm" horn
    f. Reset push button
    g. On/Off selector switch
    h. Dry contact relays and transformers as required
    i. Main power disconnect

C. COMPONENTS

1. Enclosure

    a. Enclosures shall be NEMA rated as required, for the specified environment identified in Table 2.2.B of these specifications.

    b. Enclosure shall house the circuit breaker, motor starter, control devices, relays, and terminal blocks.

2. Control Devices

a. Pilot devices shall be mounted on the enclosure front panel door.

b. Indicator lights shall be LED type. Selector switches shall be heavy duty NEMA type.

c. Control transformer shall be protected by two (2) primary fuses and one (1) secondary fuse. The 120 volt secondary shall have one leg grounded.

d. Auxiliary relay contacts shall be included for thickener drive, Run, Off, alarm, and motor cut out overload signal outputs. The contacts shall be rated 10 amp, 240 VAC, resistive load.

3. Disconnect Switch

a. A NEMA 4-non-fused disconnect switch shall be conveniently located near each component motor as required by local codes. The disconnect switch shall be pre-wired and removed for shipping if necessary.

2.4 SOURCE QUALITY CONTROL

A. Thickener components and control panel shall be factory assembled and tested to ensure proper fit and satisfactory operation. Equipment shall be shipped in the minimal practical number of pieces for minimal field assembly by the Contractor.

2.5 SHOP PAINTING

A. Stainless steel and other corrosion-resistant surfaces shall not be painted. Gearboxes, Motors, and other manufactured components will receive the manufacturer's standard weather- and corrosion-resistant coating. All fabricated steel components shall be factory primed prior to shipment with 2 coats of Tnemec Series 66 Epoxy Primer, with a total primer thickness of 6-10 mils DFT.

2.6 SPARE PARTS

A. The following spare parts shall be provided:

1. *Two (2) Hydraulic Oil Filters (for Alternate Proposal)*
2. One (1) Skimmer Neoprene
3. One (1) set of squeegee blades
4. One (1) set of gaskets, seals and sealing strips
5. *One (1) set of replacement hydraulic hoses (for Alternate Proposal)*

PART 3 EXECUTION

3.1 INSTALLATION AND TESTING

A. Supplier shall furnish the services of a factory-trained Service Engineer for One (1) trip and one (1) day for start-up, commissioning, and operator training once the unit is installed.

1. Equipment shall not be energized, or "bumped", to check the electrical connection for motor rotation without installation inspection and the Service Engineer present.

2. The Service Engineer shall test rotate each thickener for 2 complete revolutions, inspect the installation, and make recommendations for any necessary mechanical adjustments by the Contractor.

3. The Service Engineer shall conduct a torque test during the start-up and commissioning to demonstrate proper operation of the overload system.

4. The Service Engineer shall conduct a training for the Operators at the facility to operate, perform maintenance, and troubleshoot the mechanism and its components.

5. The Service Engineer shall provide a detailed final report of the testing and training conducted. This report shall be submitted to the City and Operators.

END OF SECTION

ATTACHMENT A
SECTION 46 71 13.01

GT MECHANISM APPROVED SUBMITTAL

SECTION 46 71 13.01 ATTACHMENT A
APPROVED MECHANISM SUBMITTAL

Weston & Sampson

55 Walkers Brook Drive, Suite 100, Reading, MA 01867
Tel: 978.532.1900

SHOP DRAWING REVIEW MEMORANDUM

TO:	Tim Johnson - Zima Corporation (Kusters Water) Mike Migliori - Atlantic Fluid Technology
FROM:	Jarod Stuyvesant, PE, Weston & Sampson Engineers, Inc.
DATE:	August 17, 2023
PROJECT:	ENG23-0204 Woonsocket WWTF Gravity Thickener Kusters Water Project no. WT87807 PO #P230884
SUBJECT:	Transmittal 46 71 13.01 – Rev 01

The following comments apply to shop drawing Transmittal 46 71 13.01, Rev 01 and shall be considered part of that submittal. The items in the submittal are noted below.

The comments contained in this Shop Drawing Review Memorandum are intended for use as a guide towards submittal of an approvable shop drawing transmittal and are not intended to be used as a complete checklist of revisions or to supersede the Contract Documents.

Note that failure by the Supplier to indicate deviations between the proposed equipment and the specified equipment implies full compliance with the project contract documents.

Item No. 1 – 46 71 13.01 – Gravity Thickener Mechanism Supply

- Specification Sections: 46 71 13.01
- Drawing Sheets:
- Review Code: 1 - Furnish as Submitted

Comments:

1. We are issuing an approved submittal for all submittal sections EXCEPT Section 2.16 – Weirs and Baffles. Please submit a revised package for this section as mentioned in the attached email correspondence and as described in comment #2.
2. Submittal Section 2.16 – Weir and Baffles (Submit under separate package)
    a. Drawing No. P1230343 WB - The outlet pipe is 18" ductile iron with an invert of 141.25. The proposed trough invert is 141.75. Either extend the entire trough invert down by 0.5 feet or include a small (2-4 ft) section of trough that is at least 6" deeper for the flow to enter at the invert of the outlet pipe. This section must be able to accommodate an 18" diameter hole in the FRP to allow flow into the outlet pipe. See below for the lower outlet "box" idea.

i. 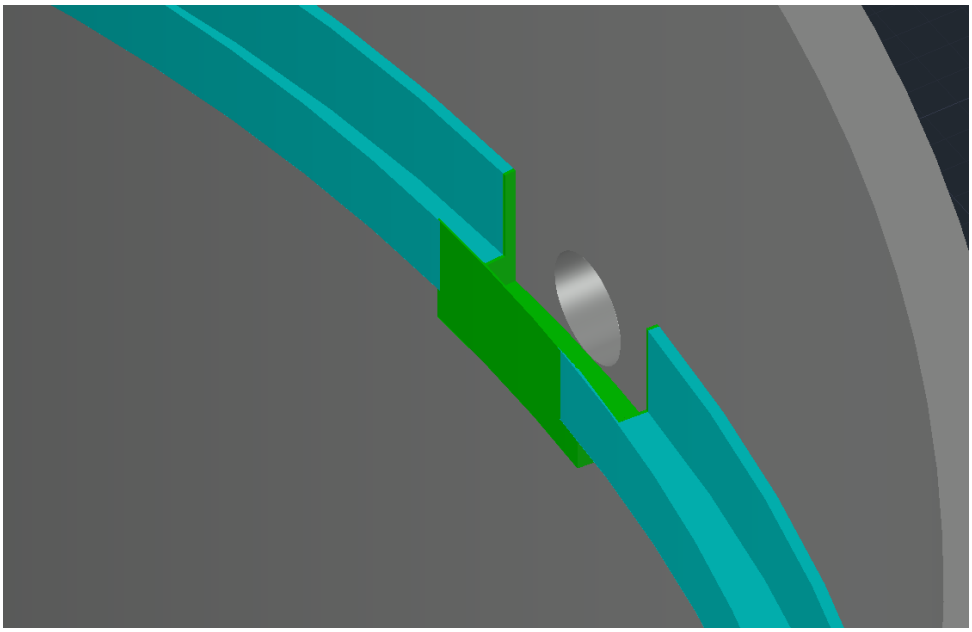

Stuyvesant, Jarod

From: Tim Johnson <tim.johnson@zimacorp.com>
Sent: Thursday, August 17, 2023 11:36 AM
To: Stuyvesant, Jarod; Mike
Cc: Toscano, Laurie; Stone, Carl W.; Michael Ronn; michelle@aftinc.com
Subject: RE: [Ext] Woonsocket GT Mechanism - Scum Box Revision

Jarod-

Please go ahead and provide the approval for the mechanism. We will provide a revised drawing to accommodate the effluent pipe.

Timothy L. Johnson, PMP
Senior Project Manager

zima
Jagenberg Group

Office Phone +1 (864) 208-9053
Cell Phone +1 (864) 612-9402
Email: tim.johnson@zimacorp.com

Zima Corporation
101 Zima Park Rd. • Spartanburg, SC 29301 • USA
www.zimacorp.com • info@zimacorp.com

From: Stuyvesant, Jarod <Stuyvesant.Jarod@wseinc.com>
Sent: Thursday, August 17, 2023 11:04 AM
To: Tim Johnson <tim.johnson@zimacorp.com>; Mike <mike@aftinc.com>
Cc: Toscano, Laurie <toscanol@wseinc.com>; Stone, Carl W. <stonec@wseinc.com>; Michael Ronn <michael.ronn@kusterswater.com>; michelle@aftinc.com
Subject: [Ext] RE: [Ext] Woonsocket GT Mechanism - Scum Box Revision

Tim,

Everything looks great, except one issue for the effluent launders/outlet pipe elevations and interface. Please see attached submittal with our cover sheet. Please have the FRP manufacturer provide a revised drawing to accommodate the outlet pipe. If you would like, we can issue an approved submittal for the mechanism components itself to begin the manufacturing process. Let me know. Thank you.

1. Submittal Section 2.16 – Weir and Baffles (3 – Revise and Resubmit)
    a. Drawing No. P1230343 WB - The outlet pipe is 18" ductile iron with an invert of 141.25. The proposed trough invert is 141.75. Either extend the entire trough invert down by 0.5 feet or include a small (2-4 ft) section of trough that is at least 6" deeper for the flow to enter at the invert of the outlet pipe. This section must be able to accommodate an 18" diameter hole in the FRP (or absence of FRP along the wall altogether) to allow flow into the outlet pipe. See below for the lower outlet "box" idea.

i. 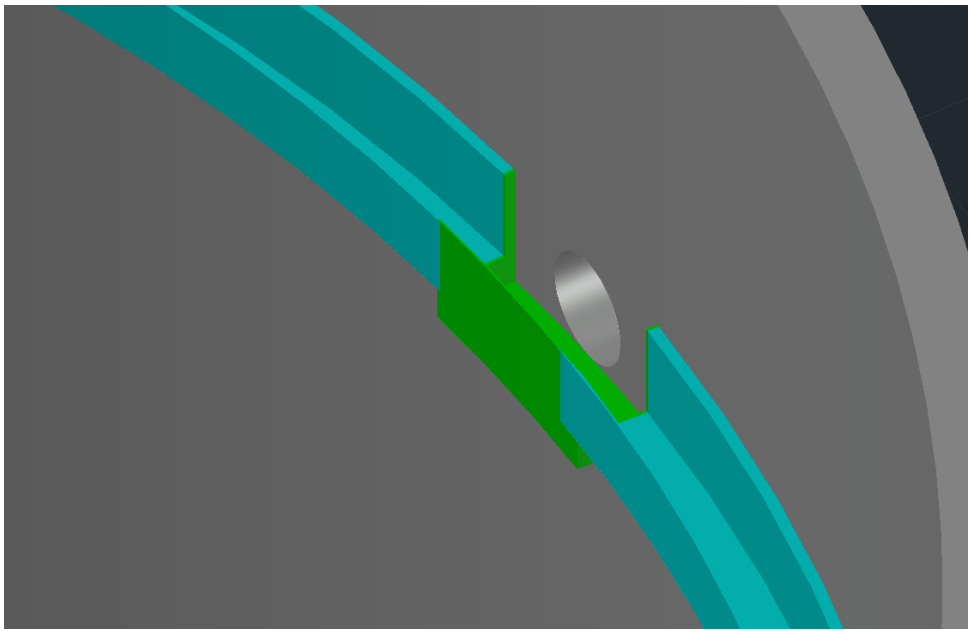

Thank you,

Jarod Stuyvesant, PE, ENV SP
PROJECT MANAGER
d: 781-670-5322
m: 616-318-5453

Weston & Sampson

Weston & Sampson
55 Walkers Brook Drive | Reading, MA 01867
tel: 978-532-1900
Website | LinkedIn

From: Tim Johnson <tim.johnson@zimacorp.com>
Sent: Thursday, August 17, 2023 10:15 AM
To: Stuyvesant, Jarod <Stuyvesant.Jarod@wseinc.com>; Mike <mike@aftinc.com>
Cc: Toscano, Laurie <toscanol@wseinc.com>; Stone, Carl W. <stonec@wseinc.com>; Michael Ronn <michael.ronn@kusterswater.com>; michelle@aftinc.com
Subject: RE: [Ext] Woonsocket GT Mechanism - Scum Box Revision

Jarod-

You should have received an email invite to download the rev1 submittal for this project. If you have any issue with downloading the document, please let me know.

https://sendto.zimacorp.com/pickup?claimID=yCNWJS4Mxrq87fep&claimPasscode=48neDVjWhuQ9zzH4
Claim ID: yCNWJS4Mxrq87fep
Claim Passcode: 48neDVjWhuQ9zzH4

Timothy L. Johnson, PMP
Senior Project Manager

KUSTERS ▪ WATER
a division of KUSTERS ZIMA

Letter of Transmittal

DATE: August 17, 2019 JOB NO.: WT87807
ATTENTION: Kenneth Allaire
Email: KAALLAIRE@WOONSOCKETRI.ORG

City of Woonsocket
PO Box B
Woonsocket, RI 02895

Ph: (401) 767-9269

WE ARE SENDING YOU:
☒ Attached ☐ Under separate cover via the following items: _____

☐ Drawings ☐ Print ☐ Plans ☐ Samples ☐ Specifications
☐ Copy of letter ☐ Change order ☒ Submittals

COPIES	QTY. REQ.	DESCRIPTION
1	1	**Engineering Submittals (Electronic Copies)**

THESE ARE TRANSMITTED as checked below:

☒ For Approval
☐ For your use
☐ As requested
☐ Approved as submitted
☐ Approved as Noted
☐ Returned for corrections
☐ Resubmit _____ copies for approval
☐ Submit _____ copies for distribution
☐ Return _____ corrected prints
☐ For review and comment
☐ For quote due _____
☐ Prints returned after loan to us
☐ _____

REMARKS:

Rev. 1 Engineering Submittal in PDF format via SendTo website

For Woonsocket. RI 60' Sludge Thickner project

SIGNED: Timothy L. Johnson, PMP

_____
Senoir Project Manager

zima
Jagenberg Group
Manufacture.Quality.Solutions.
Kusters Water Division

ENGINEERING SUBMITTAL

CITY OF WOONSOCKET, RI - GRAVITY THICKENER MECHANISM

One (1) 60'-0" Diameter Kusters Water Model HBST, Half Bridge Sludge Thickener

CUSTOMER

City of Woonsocket
11 Cumberland Hill Road
Woonsocket, RI 02895

MANUFACTURER REPRESENTATIVE

Atlantic Fluid Technology, Inc.
Tel: (508) 755-0440

EQUIPMENT MANUFACTURER

Kusters Water – A Division of Zima Corporation
101 Zima Park Drive
Spartanburg, SC 29301
Tel: (864) 208-9053
Project Manager: Tim Johnson
tim.johnson@zimacorp.com

Kusters Water Project # WT87807

Rev. 01 – 08/17/2023

zima
Jagenberg Group
Manufacture.Quality.Solutions.
Kusters Water Division

PROJECT: **WOONSOCKET, RI - GRAVITY THICKENER MECHANISM**

SPECIFICATION: **46 71 13.01 – GRAVITY THICKENER MECHANISM**

EQUIPMENT: **ONE (1) 60'-0" DIAMETER KUSTERS WATER MODEL HBST, HALF BRIDGE SLUDGE THICKENER**

ENGINEERING SUBMITTAL

INDEX

BROCHURE

1. **General Information**
   - 1.1 Engineering Comments
   - 1.2 Spec Review
   - 1.3 Exclusions
   - 1.4 Quality Assurance
   - 1.5 Welding
   - 1.6 Warranty
   - 1.7 Materials of Construction & Storage
2. **Thickener Data**
   - 2.1 Scope of Supply
   - 2.2 Design Data
   - 2.3 Spare Parts / Special Tools
   - 2.4 Center Drive Mechanism
   - 2.5 Drive Cage
   - 2.6 Center Pier
   - 2.7 Access Bridge
   - 2.8 Handrail System
   - 2.9 Truss Arms & Squeegees
   - 2.10 Influent Well
   - 2.11 Surface Skimmer and Scum Trough
   - 2.12 Surface Preparation & Coatings
   - 2.13 Anchor Bolts & Assembly Hardware
   - 2.14 Customer Service
   - 2.15 Control Panels
   - ~~2.16 Weirs and Baffles~~ SUBMITTED UNDER SEPARATE COVER. SEE "ATTACHMENT B"
3. **General Layout Drawings**
   - 3.1 General Layout Drawings

zima
Jagenberg Group

Manufacture.Quality.Solutions.

Kusters Water Division

BROCHURE

KUSTERS WATER
a division of KUSTERS ZIMA

Clarifiers & Thickeners

HEADWORKS | BIOLOGICAL | CLARIFICATION | THICKENING | BIOSOLIDS

Clarifiers & Thickeners

QUALITY, EXPERIENCE AND RELIABILITY

Kusters Water is an industry leader in all types of clarification and thickening equipment for water and wastewater treatment. Our products are in operation at hundreds of facilities around the world and are utilized daily for primary, secondary, and final clarification processes, as well as sludge thickening. Our innovative technologies, superior designs, and in-house drive manufacturing result in a superior product for our customers. Our team is ready to assist you with new equipment designs, optimization retrofits, and/or upgrades.

BRIDGE SUPPORTED UNITS

Bridge supported clarifiers and thickeners are offered in sizes ranging from 5' to 80' in diameter. Primary, secondary, and final clarification are typical applications. Every unit includes a worm, planetary, helical or spur gear drive unit designed in accordance with current AGMA or ISO standards to ensure the absolute highest quality and a minimum 20-year service life. Small diameter "shop built" units are offered in sizes up to 12 feet in diameter. Each unit is test-fit, then shipped to the customer partially assembled to reduce installation time and costs. Components typically include: steel tank shell, inlet and outlet nozzles, collector mechanism, effluent collection trough with weir and baffle plates, scum skimmers, feedwell access bridge with decking and handrail, and all required appurtenances.

Model BSTT

Model BSTT-S

Model HBST

Model HBPS-S

PIER SUPPORTED UNITS

Pier supported scraper clarifiers and thickeners are designed for all applications involving sludge removal and thickening. Flow enters through the center pier then discharges through four outlet ports located at the top of the center column of the basin and into either a controlled energy dissipating inlet (EDI) well or feedwell. The energy dissipating inlet / feedwell dissipates the influent energy, minimizes density currents, and enhances settling. Solids are collected at the bottom of the basin and raked to a collection sump located in the tank floor. The clarified effluent exits over the weir plates and out of the basin.

Spiral Blade Clarifier Systems

Spiral blade clarifiers are commonly used in primary and secondary clarification. The logarithmic spiral curve and deep blades provide a more effective means of sludge transport. Variable rotational speeds are recommended to allow for optimizing sludge removal and overall clarifier performance. Multiple accessories can be incorporated into the clarifier including: density current baffles, (EDI) energy inlets, full surface skimmers, ducking skimmers, FRP feedwells, and sludge collection manifolds.

RAPID SLUDGE REMOVAL CLARIFIERS

Rapid sludge removal clarifiers are specifically designed to provide quick and uniform removal of return activated sludge (RAS). Two suction styles are available.

Suction Pipe

Model HBSL collectors utilize collection pipes located at multiple points along each clarifier arm. Suction is generated by a differential in head developed from the partially submerged return sludge well located at the center of the clarifier. Each collection pipe is equipped with a return flow variator that controls the rate of sludge return and provides a visual indicator of the quality of RAS. Every pipe discharges into the rotating central return sludge well, then by gravity exits through a vertical steel pipe located inside the center pier. The size and quantity of pipes are selected according to the RAS flow rates. Rotating trough, straight tube designs are also available, model HBSL-S.

Model HBSL

Model HBSL-S

Model HBMS (Single Header)

Suction Header

Model HBMS collectors utilize a rotating tapered sludge collection header and manifold assembly to remove activated sludge. Settled solids are collected through orifices located along the full length of the header. Varying orifice size and spacing are computer generated to provide the desired velocities throughout the entire header assembly. Suction is typically provided by direct connection of the return activated sludge pumps to a central draw-off manifold at the tank bottom. An optional rake arm opposite the sludge header is available to collect any remaining solids. Sludge headers are offered in either single or dual configurations.

Model HBMS (Dual Header)

HIGH PERFORMANCE CLARIFIERS

Model BSRC

Model HBFC

Solids Contact Clarifier Systems

Solids contact clarifiers are designed for use in water treatment applications, including: Turbidity removal, lime softening, and iron and color removal. Every unit includes an axial flow recirculation mixer constructed of stainless steel for long life and no maintenance. The mixer drive and rake drive are independent of one another allowing for simple and individual service. Sizes are available up to 200 feet in diameter.

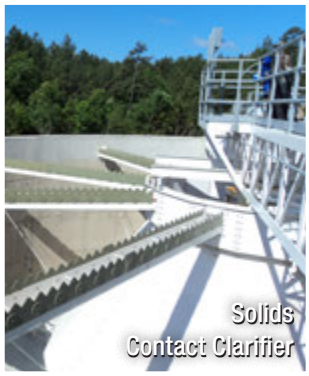
Solids Contact Clarifier

Flocculation – Clarifier Systems

Flocculating clarifiers are particularly effective for flocculation and clarification of municipal and industrial water supplies, screened primary sewage, wastes with high grit content, and industrial wastewater containing heavy settleable solids. Flocculating units can also be adapted to tertiary waste treatment as well as potable water coagulation. Individual flocculators or concentric turntable style flocculators are available. Properly sized paddle area and accurately computed velocity gradients ensure optimum performance.

CLARIFIER AND THICKENER DRIVES

All Kusters Water clarifier and thickener drives are manufactured in-house at our Spartanburg, SC facility. Kusters Water offers the largest selection of drives in the industry, including: Cast Iron split gear drives, fabricated steel precision bearing drives, high torque lift drives, hydraulic drives, helical drives, planetary drives and worm gear drives. Our team is ready to assist you with the proper drive selection based on your application and preferences.

Concentric Drives Units

Concentric drives are commonly utilized in solids contact or flocculating clarifier applications. Each unit includes an independent rake drive and flocculator or turbine drive. Housings are offered in either cast iron or steel. Variable speed drives are utilized on the flocculator and turbine drives to allow for better control of velocity gradients in the flocculation zone. Styles include both Bridge Mounted and Pier Mounted units. All units can be equipped with worm, cycloidal, helical or planetary gear reducers.

Concentric Drives

Lift Drives Units

Lift drives are utilized in high torque applications. The standard unit is equipped with an electric or manual lift assembly that raises and lowers the drive shaft and rakes. Commonly used in mining, aggregate and thickening applications.

Rake Lift Drives

Hydraulic Powered Drive Units

Technically advanced, hydraulic powered Type H drives are available in wide range of operating torques and output speeds. Power is introduced through a standard “C-Face” mounted motor connected to a low speed, high torque hydraulic power system with integral valves, pump, hydraulic motor, filter and appurtenances fully enclosed in a 304 stainless steel housing/oil reservoir.

Overload Protection:

Precise torque monitoring is a major advantage of the Type H drive system. The overload system includes alarm and motor cut-off switches that are activated by an increase in operating pressure in the hydraulic system that is directly proportionate to the torque load on the rotating mechanism. Each unit includes a maximum torque pressure relief valve, which takes the place of less accurate mechanical shear pins and allows the unit to gradually stall without damage to the rotating mechanism. Torque is monitored via a 6-inch liquid filled gauge that reads in actual operating torque.

Major Advantages of Hydraulic Drives:

- Gauge Readings in Actual (Ft-lbf) or (N*m)
- 304 Stainless Steel Housings
- External Oil Filter with Replacement Gauge
- Accurate Liquid Filled Torque Gauge
- Max torque Pressure Relief Valve
- Directional Value
- 4-20mA Output for Remote Monitoring

Hydraulic Drive

Worm Gear Drive

Spur Gear Drive

Bridge Mounted Drive Units

Worm Gear Drives:

Centrifugally cast bronze or ductile iron worm gear drives enclosed in ASTM A-48, Class 40 cast iron housings offer superior corrosion resistance and exceptionally long service life. Worm gear units are offered in many standard sizes up to a 30” main gear pitch diameter. Commonly used in municipal and industrial clarifier/thickener applications.

Spur Gear Drives:

External tooth spur gear drives enclosed in ASTM A-36 fabricated steel housing are available in numerous sizes up to an 80” main gear pitch diameter. Every unit can be equipped with worm, helical, planetary or cycloidal gear reducers. The precision main gear/bearing design is excellent for high torque applications.

Major Advantages:

- Cast Iron or Steel Housings
- Condensate Removal System
- B-10 Life Rating in Excess of 200,000hrs
- Strip Liner or Precision Bearings
- Ductile Iron or Steel Gears

Pier Mounted Drive Units

Fabricated Steel Drives:

Internal tooth spur gear drives enclosed in Fabricated Steel housings are offered in numerous standard sizes up to 120” main gear pitch diameter. For use in municipal and industrial clarifiers and thickeners. Every unit can be equipped with worm, helical, planetary or cycloidal gear reducers.

Major Advantages of Steel Drives:

- Precision Bearing Design
- High Strength A-36 Steel Housings
- B-10 life rating in excess of 200,000hrs
- Contoured Raceway Design
- Condensate Removal System
- Induction Hardened Steel Main Gears
- Oil Lubrication

Cast Iron Drives:

Internal tooth spur gear drives enclosed in ASTM A-48, Class 40. Cast Iron housings are offered in 5 standard sizes: 30”, 42”, 60”, 80” & 100” main gear pitch diameters. For use in municipal and industrial clarifiers and thickeners. Every unit can be equipped with worm, helical, planetary or cycloidal gear reducers.

Major Advantages of Cast Iron Drives:

- Split Main Gear Design
- Corrosion Resistant Cast Iron Housings
- Replaceable Strip Liners
- Replaceable Ball Bearings
- Exceptionally Deep Oil Reservoirs
- Condensate Removal System
- Ductile Iron or Cast Steel Main Gears

Pier Mounted Unit

Clarifiers & Thickeners

SPECIALTY ITEMS FOR YOUR KUSTERS WATER CLARIFIERS AND THICKENERS

Density Currents Baffles

A common problem experienced with clarifiers is solids exiting over the effluent weir. Kusters Water offers a density current baffling system in the clarifier basin to help minimize density currents and short-circuiting of suspended solids. Baffle designs are available in a variety of configurations, including: FRP baffles that bolt to the tank periphery, or the baffle can be incorporated as an integral part of the effluent launder and concrete basin.

Energy Dissipating Inlets (EDI)

Correct feedwell design is important in all clarifiers, particularly in large collectors, or during peak flow conditions. Properly designed feedwells promote uniform, radial displacement of flow through the sedimentation tank. When hydraulic displacement is not uniform, short-circuiting and poor settleable solids removal results. The purpose of this dual chamber feedwell is to maximize the influent energy. The inner energy dissipating inlet (EDI) has a full bottom, and the cylindrical side wall or bottom is equipped with multiple outlet ports. As the flow passes to the outer flocculation feedwell, the outlet ports induce a low-grade flocculation, and transport homogenized mixed liquor into the basin with greatly reduced currents. EDI designs offered Include: LA-EDI, gated EDI, Scooped EDI and MEDIC.

Specialty Items Include:

Drive Platforms	Galvanized Coatings	Rake Lift Mechanisms	FRP Feedwells
Full Radius Scum Box	Scum Spray Systems	LA-EDI Inlets	UL-Controls
Steel Tanks	Ducking Skimmers	Effluent Troughs	Stainless Steel Construction

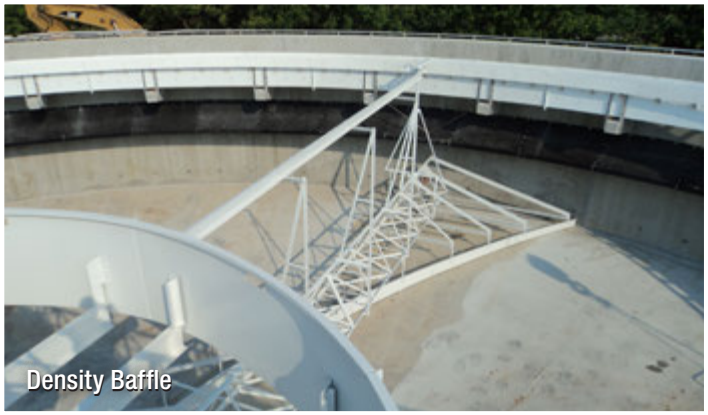
Density Baffle

Scooped EDI

Ducking Skimmer

LA-EDI

Rake Lift Mechanisms

Scum Spray System

UL-Controls

Steel Tanks

Effluent Troughs

Full Radius Scum Box

Drive Platforms

FRP Feedwell

Dependable, cost-effective solutions
for water and wastewater treatment.

For more information call **864.576.0660**
or visit **kusterswater.com**

KUSTERS ▪ WATER
a division of KUSTERS ZIMA

zima
Jagenberg Group
Manufacture.Quality.Solutions.
Kusters Water Division

SECTION ONE
GENERAL INFORMATION

zima
Jagenberg Group
Manufacture.Quality.Solutions.
Kusters Water Division

1.1 – ENGINEERING COMMENTS

Responses to REV-0 comments

1. Specification Section 46 71 13.01 – Paragraph 1.7.B.1 (1 – Furnish as Submitted)
    a. We recognize and agree that the installation contractor will be responsible for offloading the mechanism shipment. We will plan for this in the contract documents for the installation.

    KW Response: No action required.

2. Exclusions (3 – Revise and Resubmit)
    a. Spare Parts are listed under the "exclusions" category within the submittal. The specifications, in section 46 71 13.01 paragraph 2.6.A lists that the following spare parts SHALL be provided
        i. Two (2) Hydraulic Oil Filters (for Alternate Proposal)
        ii. ii. One (1) Skimmer Neoprene
        iii. iii. One (1) set of squeegee blades
        iv. iv. One (1) set of gaskets, seals and sealing strips
        v. v. One (1) set of replacement hydraulic hoses (for Alternate Proposal)

    KW response: Comment removed from exclusions.

    b. These spare parts are mentioned in submittal section 2.3, with the exception of the set of gaskets,seals, and sealing strips. Please revise to include these.

    KW response: Required items have been added to spare parts.

3. Submittal Section 2.4 – Center Drive Mechanism (Provide Response)
    a. Peak Momentary torque is listed as 2x continuous for the design torque in our spec section 46 71 13.01 paragraph 2.2.B. Please verify that the system can handle a 72,000 ft-lb momentary torque should the alarm/cutoff fail.
        i. In the submittal AGMA calculations, the drive unit is calculated to be rated for 38,983 ftlbs. Please verify that the unit will not fail or be in need of repair if the unit experiences the cut-off torque of 46,800 ft-lbs as mentioned in submittal section 2.4.

    KW response: Drive AGMA calculations are based on continuous torque providing a design safety factor of 2.0, same as the mechanism design safety factor.

    The drive will be safe up to 2 times the max rating of 38,983 or 77,966 so the drive is capable of handling any anticipated torques for this application.

Zima Corporation
physical address
101 Zima Park Drive
Spartanburg • SC 29301 • USA

mailing address
P.O. Box 6128
Spartanburg • SC 29304 • USA
+1 864 576-0660
www.zimacorp.com/water
www.kusterswater.com

NSF
Registered to ISO 9001

4. Submittal Section 2.16 – Weir and Baffles (Submit Separately)
    a. The following items shall be discussed between Kusters/Zima, the FRP supplier, and engineer prior to revising the design. Please include the weirs and baffles in a submittal under a separate cover so that we may expedite the approval of the mechanism and its components.
        i. Round Rod assemblies – the tank has these currently and it presents issues with solids buildup on the cross rods over the trough. Do you have alternative designs that utilize brackets exterior to the trough to provide the rigidity and support needed?
        ii. Bolts in the bottom of the trough – concerned about solids buildup over time. Can the trough be fasted on the side walls only?
        iii. Interstitial space behind the trough assembly between the trough and wall – water level is higher than the top of the trough on this side and water will try to push between the wall and lip of the trough.
        iv. Drawings require a sloped trough bottom. The depth of the trough shall vary from 12” to 18”. 12” on the high side (180 degrees from existing outlet pipe) and 18” deep at the outlet pipe. Weir and baffle elevations shall not fluctuate. Please revise and re-submit drawings on the trough.

KW response: Each of these questions was discussed during conference call held on August 8th. Weirs & Baffles drawings have been revised, based on discussions, and provided in this rev 1 submittal.

5. Submittal Section 3.1 – General Layout Drawings (3 – Revise and Resubmit)
    a. Drawing 87807-SM101
        i. Scum trough outlet pipe to be 45 degrees counterclockwise from centerline of walkway.

KW response: Drawing has been revised.

    b. Drawing 87807-SM501
        i. New top of grout elevation at wall = 128.59
        ii. Ex. Top of grout elevation at wall = 128.43
        iii. What is the scum outlet pipe diameter and bolt pattern? (Provide Response)

KW response: Drawing has been revised, and scum outlet pipe diameter and bolt pattern has been provided.

zima
Jagenberg Group
Manufacture.Quality.Solutions.
Kusters Water Division

REV- 0 ENGINEERING COMMENTS

1. Kusters Water reserves the right to meet directly with the Engineer/Owner/Contractor and resolve all submittal approval questions and responses.

2. Operation and Maintenance Manuals: Kusters Water normal time cycle for O & M Manual issue is prior to shipment of the equipment, thus allowing the incorporation of erection and as-built drawings which are not available immediately after approval.

3. No special tools are required for the operation of this equipment.

4. Hydraulic Drive Option being provided.

5. Electronic copies of submittals are being provided for review and approval. Record hard copies can be provided, if required.

6. Scum trough to be 6’-0” in width.

zima
Jagenberg Group

Manufacture.Quality.Solutions.

Kusters Water Division

1.2 – SPEC REVIEW

SECTION 46 71 13.01

GRAVITY THICKENER MECHANISM SUPPLY

PART 1 GENERAL

1.1 SCOPE OF WORK

A. Supplier shall provide a price quote to supply one (1) gravity thickener mechanism, complete with center drive, center support column, influent feed well, sludge collector mechanism, effluent weir and launder assembly, skimmer and scum box, assembly hardware, anchor bolts, bridge, walkway (sized to support influent piping loads), walkway handrail, disconnect switch, control panel, and all accessories and appurtenances specified or otherwise required for a complete and properly operating installation within the existing gravity thickener tank.

B. The mechanism shall employ an electric motor and gear drives with a mechanical torque sensor and alarm or a hydraulic drive unit with hydraulic pressure torque sensor with alarms. The specifications for each of these drive types are included within this document as "Base: Drive Option 1" and "Alternate: Drive Option 2". If a manufacturer offers both options, please provide complete pricing and information for both, clearly delineating any and all differences in system design. *All specification language pertaining to the Alternate Quote is shown in italicized font.*

C. Manufacturing and delivery of all required components to the Woonsocket Wastewater Treatment Facility at 11 Cumberland Hill Rd, Woonsocket, RI 02895. The Owner shall identify an acceptable temporary storage location prior to delivery. Supplier shall be responsible for offloading of all equipment and provisions for temporary storage to protect the equipment from damage until it is installed.

D. This specification section covers only the supply and startup services of the equipment. The City will bid a separate contract for the installation of the mechanism at a future date. The City will share the contact information of the future installation contractor with the awarded mechanism Supplier.

E. Suppliers shall also provide the necessary startup, assistance, and training services described within these specifications as a minimum. Any additional installation and or startup assistance necessary to maintain the manufacturer's equipment warrantee shall be specifically described and included as a separate bid price line item.

F. This equipment will be pre-purchased by the City of Woonsocket, and installed by the future awarded Contractor once the materials arrive on site.

G. Supplier shall coordinate with Contractor for startup and testing services once the equipment is installed.

1.2 RELATED SECTIONS

A. SECTION 46 71 13.02 Gravity Thickener Mechanism Installation (By Others)

1.3 SUBMITTALS

A. Provide shop drawings and product data for the equipment being furnished, to include at minimum the following:

1. Certified shop drawings showing the details of construction, dimensions and anchor bolt requirements.
2. Complete wiring diagrams detailing all required field connections.
3. Descriptive literature, brochures, and/or catalogs of submitted equipment.
4. Calculations showing the structural capability of the thickener mechanism including all connection to existing structures to withstand all static and dynamic operating loads including the momentary peak torque.
5. Complete bill of materials for the equipment.
6. List of Manufacturer's recommended spare parts.
7. Calculations substantiating the continuous torque rating of the main gear set in accordance with standard ANSI / AGMA 2001.
8. Operation and maintenance manuals
9. Manufacturer's valid ISO 9001:2008 certificate of registration
10. Equipment weights and lifting points.
11. Short and long term storage requirements.
12. Manufacturer's installation instructions.
13. Installation Reference Lists
14. Valid Welder Certifications
15. A copy of Manufacturer's factory warranty.

1.4 REFERENCE STANDARDS

A. American Iron and Steel Institute (AISI).

B. American National Standards Institute (ANSI).

C. American Society for Testing Materials (ASTM).

D. American Bearing Manufacturers Association (ABMA).

E. American Gear Manufacturers Association (AGMA).

F. National Electrical Manufacturers Association (NEMA).

G. Underwriters Laboratory (UL).

1.5 QUALITY ASSURANCE

A. Qualifications: Qualified Manufacturers shall have a minimum of 25 years' experience manufacturing gravity thickeners, with no fewer than 100 operating installations of the type

specified herein located in the USA. Manufacturer shall provide a list of 5 names and dates of installations for verification by the Owner.

B. A single manufacturer shall provide all components including but not limited to the thickener, rake/picket mechanism, integral scum skimming system, drive unit, all related supports, and walkway as a complete integrated package to ensure proper coordination, compatibility, and operation of the system.

C. Thickener shall be Manufacturer's standard product and only modified as necessary to comply with the drawings, specifications, and specified service conditions.

D. All welding is performed in accordance with American Welding Society (AWS) Structural Welding Code.

E. All stainless-steel components shall undergo a passivation process to ensure maximum resistance to corrosion. All stainless-steel surfaces shall be thoroughly cleaned and glass bead-blasted to a minimum SSPC-SP-6 finish. The use of nitric and hydrofluoric acid passivation is not acceptable due to the negative impact these chemicals have on the environment.

F. Supplier shall guarantee all equipment against faulty or inadequate design, improper assembly or installation, defective workmanship or materials, and breakage or other failure. Materials shall be suitable for service conditions. The tank and Mechanism will be covered by a flat aluminum cover (supplied by others). The cover shall be installed below the walkway and shall be supported independently from the mechanism.

G. All equipment shall be designed, fabricated, and assembled in accordance with recognized and acceptable engineering and shop practices. The fabrication shall be performed by the equipment manufacturer at the manufacturer's facility located within the continental USA; all welding shall be performed by direct employees of the manufacturer; each welder shall be certified in accordance with AWS or ASME. Welder certificates shall be provided to the Engineer upon request.

H. Each thickener mechanism shall have the Manufacturer's name, address, and product identification information on a corrosion resistant nameplate securely affixed to the equipment.

I. Thickener manufacturer shall be ISO 9001:2008 certified and provide the Engineer with a copy of a valid certificate of registration.

1.6 WARRANTY

A. The equipment shall be warranted by the manufacturer for a period of two (2) year from the date of shipment or one (1) year from the date of startup, whatever is sooner.

1.7 DELIVERY, STORAGE, AND HANDLING

A. Shipping

1. Ship equipment, material, and spare parts complete except where partial disassembly is required by transportation regulations or for protection of components.

2. Pack spare parts in containers bearing labels clearly designating contents and equipment for which they are intended.

3. Ship all components in protective packaging that would warrant storage for a period up to 6 months, if necessary.

B. Receiving and Storage:

1. Supplier is responsible for offloading equipment and materials and placing them into the temporary storage location designated by the City. unloading By

2. Store and safeguard equipment, material, and spare parts. All spare parts must be stored in accordance with manufacturer's recommendations.

1.8 SUBMITTALS

A. GENERAL:

1. The Supplier shall submit the shop and working drawing submittals electronically.

B. ELECTRONIC SUBMITTALS:

1. In accordance with the accepted schedule, the Supplier shall submit promptly to the Engineer & City by email (Stuyvesant.jarod@wseinc.com & jpratt@woonsocketri.org) one electronic copy in Portable Document Format (PDF) of shop or working drawings required as noted in the specifications, of equipment, structural details and materials fabricated especially for this Contract.

2. Each electronic copy of the shop or working drawing shall be accompanied by a shop drawing transmittal form, on which is a list of the drawings, descriptions and numbers and the names of the Owner, Project, Supplier and building, equipment or structure.

3. The Supplier shall receive a shop drawing memorandum with the Engineer's approval or comments via email.

C. SHOP AND WORKING DRAWINGS: Submittals to be submitted

1. Shop and working drawings shall show the principal dimensions, weight, structural and operating features, space required, clearances, type and/or brand of finish of shop coat, grease fittings, etc., depending on the subject of the drawings. When it is customary to do so, when the dimensions are of particular importance, or when so specified, the drawings shall be certified by the manufacturer or fabricator as correct for this Contract.

2. All shop and working drawings shall be submitted to the Engineer by and/or through the Supplier, who shall be responsible for returning reviewed drawings to them. All shop and working drawings shall be prepared on standard size, 24-inch by 36-inch sheets, except those, which are made by changing existing standard shop or working drawings. All drawings shall be clearly marked with the names of the Owner, Project, Supplier and building, equipment or structure to which the drawing applies, and shall be suitably numbered.

3. Shop drawings shall be reviewed and marked with the date, checker's name and indication of the Supplier's approval. Shop drawings submitted to the Engineer without the Supplier's approval stamp and signature will be rejected. Any deviation from the Contract Documents indicated on the shop drawings must be identified on the drawings and in a separate submittal to the Engineer, as required in this section of the specifications and General Conditions.

4. The Supplier shall be responsible for the prompt submittal and resubmittal, as necessary, of all shop and working drawings so that there will be no delay in the work due to the absence of such drawings.

5. The Engineer will review the shop and working drawings as to their general conformance with the design concept of the project and general compliance with the information given in the Contract Documents. Corrections of comments made on the drawings during the review do not relieve the Supplier from compliance with requirements of the Contract Documents. The Supplier is responsible for: confirming and correlating all requirements of the specifications.

6. With few exceptions, shop drawings will be reviewed and returned to the Supplier within 14 days of submittal.

1.9 OPERATION AND MAINTENANCE MANUALS

A. The Supplier shall provide four (4) hard copies of Operation & Maintenance Manuals and an electronic searchable PDF O&M manual. The manufacturer shall be responsible for supplying written instructions, which shall be sufficiently comprehensive to enable the operator to operate and maintain the mechanism and all equipment supplied by the manufacturer. Said instructions shall assume that the operator is familiar with pumps, motors, piping, and valves, but that they have not previously operated and/or maintained the exact equipment supplied.

These instructions shall be prepared as a systems manual applicable solely to the mechanism and equipment supplied by the manufacturer to these specifications, and shall include those devices and equipment supplied by it. However, items of equipment for which the manufacturer has made mounting or other provisions, but which it has not supplied, may be excluded from these instructions.

These instructions shall include, but not be limited to, the following:

1. Descriptions of, and operating instructions for, each component of the mechanism as supplied.

2. Instructions for operation of the mechanism in all intended modes of operation.

3. Instructions for all adjustments which must be performed at initial startup of the mechanism, and adjustments which must be performed in the course of preventive maintenance as specified by the manufacturer.

4. Instructions for the adjustment, calibration, and testing of selected electronic components or assemblies, normally replaceable by the manufacturer, whose performance is not ascertainable by visual inspection.

5. Service instructions for major components not manufactured by the manufacturer but which

are supplied by it in accordance with these specifications. Incorporation of literature produced by the actual component manufacturer shall be acceptable.

6. Electrical schematic diagram of the mechanism as supplied, prepared in accordance with NMTBA and JIC standards. Schematics shall show motor branch, control, and alarm system circuits, and interconnections among these circuits. Wire numbers shall be shown on the schematics. Schematic diagrams for electronic equipment, the detail parts of which are normally not repairable by the operator, need not be included, and shall not be substituted for an overall schematic diagram. Partial schematics, block diagrams, and simplified schematics shall not be provided in lieu of an overall schematic diagram.

7. Layout drawing of the mechanism as supplied, prepared in accordance with good commercial practice, showing the locations of all equipment.

   Operation and maintenance instructions which are limited to a collection of component manufacturer literature without overall thickener instructions will not be acceptable.

   Operation and maintenance instructions shall be specific to the equipment supplied in accordance with these specifications. Instruction manuals applicable to many different configurations and thickeners, and which require the operator to selectively read portions of the instructions, will not be acceptable.

PART 2 PRODUCTS

2.1 ACCEPTABLE MANUFACTURERS

A. Thickener Mechanism must be in compliance with these specifications and shall be supplied by one of the following manufacturers:

   1. Kusters Water, Spartanburg, SC
   2. WesTech Engineering, Salt Lake City, UT
   3. Walker Process Equipment, Aurora, IL

B. The City reserves the right to choose the manufacturer based on qualifications, price, references, and/or operational preference.

2.2 GRAVITY THICKENING EQUIPMENT

A. GENERAL DESIGN FABRICATION REQUIREMENTS

   1. Structural Steel: ASTM A-36 and shall conform to requirements of the AISC "Speciation of the design, fabrication and erection for structural steel for buildings" Latest edition, except that the maximum allowable stress for the loading conditions of any member shall be 2/3 the value allowed by the AISC.

   2. All non-stainless-steel components shall be factory primed prior to delivery with 2 coats of Tnemec Series 66 Epoxy Primer, with a total primer thickness of 6-10 mils DFT.

   3. Thickness of Structural Steel shall be no less than ¼ inch.

4. All Structural Steel shall be factory primed before shipment.

5. Welding: All A-36 steel, both submerged and non-submerged, shall be continuously seal welded. Stitch or skip welding is not permitted.

6. The thickener components shall be designed for all bolted connections, field welding will not be permitted.

7. The manufacturer shall ensure the manufacturer furnished anchor bolt templates are properly designed for the application.

8. Edge Grinding: Sharp projections of cut or sheared edges of ferrous metal shall be ground to a radius by a power grinder as required to ensure satisfactory coating adhesion.

B. DESIGN CRITERIA

Average TSS of Thickened Blanket (mg/L):	40,000
Max. TSS of Thickened Blanket (mg/L):	100,000 or 10% solids
AGMA Rated Continuous Torque (ft-lbs):	36,000
Momentary Peak Torque:	2x Continuous
Minimum Main Gear Pitch Diameter (in):	30
Minimum Main Bearing Diameter (in):	35
Tip Speed (ft/ min):	8
Tank Diameter (ft):	60
Sidewater Depth (ft):	14'-7"
Floor Slope (in/in):	1¾ : 12
Feedwell Diameter (ft):	9
Feedwell Depth (ft):	4 to 5
Top of Vertical Sludge Pickets at Wall (ft):	9
Vertical Sludge Picket Spacing (in):	24
Minimum Drive Motor Horsepower:	1.5
Operational Environment:	Non Hazardous (Above Cover)
Stainless Steel Hardware Grade:	316
Center Column Diameter (in):	18

Refer to the preliminary drawing at the end of these specifications for the proposed mechanism and bridge dimensions within the existing tank structure.

C. PERFORMANCE AND DESIGN REQUIREMENTS

1. All components shall be designed and manufactured so the thickener can withstand the structural force exerted by momentary peak torque. All structural and functional parts shall be adequately sized to prevent deflection and vibration which could impair operation.

D. THICKENER COMPONENTS

1. Center Column

   a. The center column shall Support entire sludge collector mechanism including inboard end of the access bridge; sized and designed by collector manufacturer. Minimum wall thickness of 1/4 inch; mounted at center of basin. Shall be provided and designed to support all required static and dynamic loads. The column shall be designed for 2 times the continuous operating torque identified in section 2.2.B.

   b. The bottom of the column shall have a bolting flange for anchorage to the concrete tank using stainless steel anchor bolts. The Manufacturer shall provide a steel template/grout shield to accurately locate anchors and allow for grouting beneath the pier after final plumbing.

   c. The column shall have gusset plates located at the top and bottom flanges for added strength.

2. Center Drive Cage

   a. The drive cage shall be a steel box truss capable of carrying dead load of rake arms plus its own dead load, as well as design total torque assuming entire design torque is distributed uniformly along each rake arm: bolted to spur gear assembly that rotates center cage; bolted to rake arms and influent well hangers (if used).

   b. Structural calculations shall be provided verifying the structural ability of the drive cage. The cage shall be designed for 2 times the continuous operating torque identified in Table 2.2.B.

3. Feedwell

   a. Welded steel concentric with center column supported by center cage or access bridge; top edges approximately 4 inches above tank water surface. Size shall be as identified in Table 2.2.B. Minimum steel thickness ¼".

   b. Four baffled slots at liquid level to permit removal of floating material in well; 12 inches long; extending 2 inches below low-water level.

   c. Feedwell plate sections shall be designed to bolt together.

4. Rotating Rake Arms

   a. Each designed for 2 times the continuous torque identified is Table 2.2.B. Total torque shall be assumed to be distributed uniformly along each rake arm.

   b. Rake arm design shall conform to slope of tank floor; consisting of structural steel triangular or box trusses attached rigidly to the center cage. Shall not incorporate use of any tie rods; self-supporting and without tie rods.

c. Flights shall be a minimum 4" deep and shall provide full floor coverage of the entire radius on each arm.

d. Stainless steel squeegees shall be provided on each blade and shall allow for 2-inches of vertical adjustment. Squeegees shall be attached with stainless steel hardware.

e. Vertical pickets shall be provided for each rake arm. The pickets shall be designed to enhance thickening. Spacing shall be no less than 2ft. centers. The pickets shall extend to 9 ft above the floor measured at the outer wall.

5. Walkway and Service Platform

a. Welded steel truss or beam bridge construction and composed of two main members laterally braced together. UHMW-PE slide plates and anchor bolts for wall support shall be provided.

b. Bridge shall be capable of supporting dead loads plus minimum walkway live load of 50 pounds per square foot with deflection of maximum L/360 of span for dead load plus live loads; cambered for 1/3 live load plus dead load. Bridge shall also be designed to carry the loads of a 6", 8", and 14" ductile iron pipe, each full of water, along the entire length of the bridge, suspended from the beams. Refer to the preliminary drawing at the end of this section.

c. Walkway shall be supported at the drive service platform and the concrete wall. The service platform shall be located around the center drive and provide a minimum clearance of 1 feet 6 inches around all sides of the drive mechanism. Walkway shall have a minimum of 36" clearance between handrails.

d. Handrail: The walkway and platform shall be provided with mechanical handrail 42" high, double row 1.5" diameter aluminum pipe, and 0.25" x 4" kickplates on both sides. Walkway trusses may serve as the handrail if the top chord is 3'-6" above the walking surface.

e. Decking: The entire walkway shall be covered with aluminum I-bar grating, 1.25" thick, attached with aluminum grating clips and stainless steel hardware. The service platform shall be covered with 0.25" aluminum checkered plate.

6. Effluent Weir and Launder Assembly

a. A rectangular FRP effluent launder shall be provided around the perimeter of the tank. The launder shall be 12" wide and 18" deep, sloped at 0.5% each direction around the tank, from the high point to the overflow outlet pipe. FRP v-notch weirs shall be provided affixed to the effluent launder. The v-notches of the weirs shall remain at a consistent elevation around the entire tank in order to maintain a constant water surface elevation of 143.00 at an average overflow rate of 310 gpm distributed evenly around the entire circumference of the tank. All hardware shall be 316 stainless steel. Assembly must be capable of bolting to existing concrete walls.

7. Skimmer and Scum Removal

   a. A surface skimming system shall be provided and consist of two (2) skimming arms with skimmer heads, and a scum collection trough.

   b. The thickener shall be equipped with two skimmer full radius arm assemblies to collect and discharge surface scum into an extended length scum trough cantilevered from the tank wall.

   c. Each skimmer arm shall be a fabricated tube assembly connected to the center cage and cantilevered from the rotating feedwell. Tie rods shall be properly located to allow adjustment of the skimmer arm as well as to resist horizontal forces.

   d. Each skimmer arm shall be equipped with a hinged ½" inch 65 durometer neoprene wiper blade extending the full width of the arm. The neoprene blade shall be fastened to the arm with stainless steel fasteners with steel back-up bars. Each skimmer arm shall be equipped with brushes with synthetic bristles on the end that will brush the effluent v-notch weirs in an effort to keep them clean from debris.

   e. The extended scum trough shall be fabricated from 1/4 inch steel plate, shall be a full radial trough supported from the tank wall as shown on the drawings. The trough and support structure should be designed for all dead loads plus a 200 hundred pound point load at the feedwell end of the trough with no more than 1/2 inch deflection. The approach ramp of the trough shall be of radial design, having a tapered width and a variable slope that will enable the full length of the skimmer wiper to make simultaneous and continuous contact with the entire ramp along a radial line, at each revolution of the skimmer arm. The trough shall be 8 inches wide with a uniformly sloped bottom to allow scum to discharge towards the tank wall. Fabrication of the trough shall be true and free of warpage. An 8-inch flange, ANSI B16.1, connection shall be provided as shown on the drawings for the outlet of scum to be routed via a newly installed pipe.

   f. The thickener equipment manufacturer shall furnish a flush valve assembly for automatic flushing of the scum box and scum pipe. The flush valve assembly shall allow approximately 0 to 20 gallons of clarified effluent to enter the box as the skimmer assembly passes over the scum box. It shall consist of an actuator bar and a pivoting assembly that will open the valve. A counterweight shall return the ball to its closed position after the flush cycle. The flush valve shall be a minimum 2-1/2" plunger valve.

   g. An auto flush valve assembly shall be provided and mounted on the scum box. The valve body and parts shall be corrosion resistant material of either stainless steel or brass. The valve shall automatically open and close with each pass of the skimmer arm. The seal shall be a BUNA-N rubber type and properly seal without leakage. The duration and volume of flush water shall be adjustable.

   h. The scum trough shall be provided with an 8" outlet flange, ANSI B16.1.

8. ~~Base Quote: Center Drive Mechanism "Base: Drive Option 1"~~

   a. ~~Design Parameters: The drive unit shall be designed and manufactured by the thickener equipment Supplier to ensure unit responsibility. The drive unit shall be designed for the torque values previously listed. It shall turn the mechanism at the design connector tip~~

speed. The drive main bearing shall be designed for the total rotating mechanism loads with a minimum L 10 life of 50 years or 438,000 hours. The drive unit shall be capable of producing and withstanding the previously listed momentary peak torque while starting. The drive main gear shall be designed to a minimum AGMA 6 rating when rated in accordance with the latest AGMA standard. Gear teeth shall be designed for proper load distribution and sharing. The main bearing shall be capable of withstanding the listed overturning moment without the aid of any underwater guides or bearings to ensure correct tooth contact for AGMA rating of the main gear.

i. All spur gearing shall be designed to the latest AGMA spur gear standard for strength and surface durability, based on a life of 175,000 hours. The design running torque rating of the drive gearing shall be based on the smaller of the strength and durability values determined from the above AGMA standard. To ensure safety and ease of maintenance, all components of the drive shall be direct coupled.

ii. No overhung pinions shall be allowed on the speed reducing unit. The lower pinion bearing shall not be located below the turntable base.

iii. All welding on the drive unit shall be done using E70XX weld rod.

b. Physical Characteristics: The drive unit shall consist of a solid internal main spur gear, bearing turntable, pinion, secondary speed reducer, support base, and drive unit bearing. The drive shall be mounted on the center column and support the entire rotating load of the mechanism. The main internal gear shall be forged of alloy hardened steel. The pinion shall be heat treated alloy steel. Support base for the drive shall be of welded steel to assure rigidity. Dust shields shall be provided. The drive bearing shall include a forged steel precision gear/bearing set, with fully contoured raceways hardened to a minimum 58 62 Rc and protected by a neoprene seal. The drive shall be designed so that the balls and nylon spacers can be replaced without removing the access walkway. The main gear to pinion gear mesh shall be oil lubricated. An oil sight glass, fill pipe, and drain shall be provided for the reservoir. Lubrication fittings shall be readily accessible.

c. Overload Protection: An overload device shall be provided in a stainless steel, weatherproof enclosure. The device shall be actuated by torque generated from the main drive, which shall operate two independently adjustable switches (the alarm switch at 100 percent of design running torque and the motor cutout switch at 120 percent of design running torque). These two switches shall be factory adjusted to accurately calibrate the alarm torque value and the overload position. A visual torque indicator shall be provided and oriented so that it may be read from the walkway. It shall be calibrated from 0 to 160 percent of design running torque.

d. Turntable: The turntable base shall have an annular bearing raceway upon which the rotating assembly rests. It shall have a maximum allowable deflection in accordance with the bearing specifications. The allowable modulus of elasticity shall be a minimum of 29 x 106 psi. The center cage shall be fastened to and supported from the gear casing. Ball bearings shall be of high carbon chrome alloy 52100 steel running in fully contoured races, as part of a precision gear/bearing set. The balls shall be grease lubricated and protected by elastomer seals. Felt seals that allow the entrance of moisture from outside the drive (i.e., rainwater, condensate, etc.) will not be allowed.

e. Speed Reducing Unit: The speed reducing unit shall consist of cycloidal, helical, or planetary speed reducers directly connected to a motor without the use of chains or v belts and shall be keyed to the pinion.

   i. The main ring gear of cycloidal drives shall be made of high carbon chromium bearing steel and be fixed to the drive casing. An eccentric bearing on the high-speed shaft shall roll cycloidal discs of the same material around the internal circumference of this main ring gear. The lobes of the cycloid disc shall engage successively with pins in the fixed ring gear. The movement of the cycloid discs shall be transmitted then by pins to the low-speed shaft. Speed reducer efficiency shall be a minimum of 90% per reduction stage.

   ii. Speed reducer helical or planetary gearing shall be manufactured to AGMA standards and shall provide at least 95% power transmission efficiency per stage. The speed reducer shall have a minimum service factor of 1.25 based on the output torque rating of the drive.

   iii. The reducers shall be fitted with radial and thrust bearings of proper size for all mechanism loads and be grease lubricated. As a safety feature, the speed reducer shall be back drivable to release any stored energy as the result of an over torque condition.

f. Motor: The motor shall be a squirrel cage, induction type, TEFC, ball bearing heavy duty unit of ample power for starting and operating the mechanism without overload, with a minimum service factor of 1.15. Power supply to the equipment shall be 240/480-volt, 60 hertz, 3 phase.

9. *Alternate Quote: Center Drive Mechanism "Alternate: Drive Option 2"*

   a. *General: The center thickener drive mechanism shall consist of an electrical motor, primary reducer, intermediate gear reducer and a main gear set consisting of a spur pinion and internal tooth spur gear.*

   b. *Motor: The thickener drive shall be driven by an electric motor. The motor shall be UL rated for the operational environment as specified in Table 2.2 B. The motor shall be rated for 230/460V, 60 Hz, 3-phase operation with a minimum service factor of 1.15.*

   c. *Primary Reducer: A primary hydraulic reducer shall transmit torque to the intermediate reducer and provide overload protection. The hydraulic system shall be self-contained, and fully enclosed in a 304 stainless steel enclosure. The enclosure shall also function as the fluid reservoir and shall provide a minimum 8 gallon capacity. The hydraulic system shall include: a hydraulic motor, a hydraulic pump, an aluminum manifold assembly, a flow directional valve, a pressure relief valve draining back to hydraulic reservoir, an oil filter assembly, an oil filter replacement indication gage, a 6-inch diameter glycerin filled torque indication gage and all necessary hoses and fittings.*

   d. *Intermediate Reducer: The intermediate reducer shall be a planetary type, providing no less than 90% gear efficiency. All lubrication of the planetary gearing shall be oil. Grease lubrication is not permitted. The planetary reducer shall be designed for a 200,000 hr. service life at the rpm and torque specified in Table 2.2.B. The output shaft of the intermediate reducer shall be keyed to a heat treated spur pinion.*

e. *Final Reducer: The main gear shall include an internal tooth spur gear and spur pinion. The main gear material shall be forged alloy steel, induction hardened to a minimum 53Rc. The pinion shall be constructed from AISI 4150 steel, hardened to a minimum 340 Bhn.*

f. *Turntable Base: Fabricated Steel, ASTM A36, minimum 36,000 psi tensile strength; able to be bolted to center column and to provide support for internal spur gear, the entire rotating collector mechanism and one end of the access bridge. Cast iron housing are not permitted.*

g. *Main Bearing: The main bearing shall consist of hardened steel chrome ball bearings and nylon spacer (1" minimum), each riding on a contoured, hardened steel raceway set as part of a precision bearing. The main bearing diameter shall be as identified in Table 2.2.B of these specifications. The main bearing shall be designed for a minimum B-10 life of 200,000 hours based on ABMA standards when operating at the maximum continuous output torque and rpm of the mechanism.*

h. *Torque Overload Protection: The thickener drive shall include a hydraulic torque overload protection system. Mechanical overload devices are not permitted due to their inherent inaccuracy. Two overload switches shall be provided, one for "alarm" set at 100% of the continuous torque identified in Table 2.2.B, and one for "motor cut-off" set at 130% of the continuous torque identified in Table 2.2.B. Additionally a pressure relieve valve shall be provided set at 150% of the continuous torque identified in Table 2.2.B. All switches shall be current rated for 120 VAC. Each switch shall be NEMA rated for the specified environment identified in Table 2.2.B of these specifications. The torque indication gage shall be 6 inches in diameter, glycerin filled with a scale that displays actual operating torque (ft-lbs or N-m).*

i. *Condensate Removal: A condensate removal system shall be included to automatically remove condensate from the main gear housing. The condensate system shall include a 1" galvanized steel piping with vertical stem. The pipe arrangement shall be designed to provide constant removal of condensate from the main gear housing. A minimum of 6" clearance shall be provided below the low point drain to allow for easy access by plant personnel.*

j. *Coatings: Thickener drive mechanism shall be factory primed and finish coated with at least 2 coats (2-3 mils per coat, minimum DFT) of Tnemec epoxy (primer: Series 66, finish: Series 66HS – safety gray) prior to shipment.*

2.3 CONTROLS AND INSTRUMENTATION

A. GENERAL

1. The thickener control panel shall be the Supplier's standard UL listed enclosure and wired for 230/460 volts, 3-phase, 60 Hz electrical service. The enclosure shall be furnished completely pre-wired internally and tested, requiring only mounting and connection to field mounted electrical devices and the drive unit. The control panel shall include all equipment required to control the thickener specified herein. Panel shall be shipped loose for mounting location to be determined.

2. The control panel enclosure shall be NEMA rated for the specified environment identified in Table 2.2.B of these specifications. The enclosure shall house the control devices, relays, terminal blocks, and motor starter. All hinges and latches shall be corrosion-resistant.

B. OPERATION

1. The control system shall be equipped with one (1) ON / OFF position selector switch. In the Off mode the thickener drive will not run. In the ON mode the thickener drive shall run continuously. The following items shall be included in each control panel.

   a. Thickener run light (green)
   b. Torque "alarm" light (amber)
   c. Torque "motor cut out" light (red)
   d. UL 508 Listed industrial controls label
   e. "Alarm" horn
   f. Reset push button
   g. On/Off selector switch
   h. Dry contact relays and transformers as required
   i. Main power disconnect

C. COMPONENTS

1. Enclosure

   a. Enclosures shall be NEMA rated as required, for the specified environment identified in Table 2.2.B of these specifications.

   b. Enclosure shall house the circuit breaker, motor starter, control devices, relays, and terminal blocks.

2. Control Devices

   a. Pilot devices shall be mounted on the enclosure front panel door.

   b. Indicator lights shall be LED type. Selector switches shall be heavy duty NEMA type.

   c. Control transformer shall be protected by two (2) primary fuses and one (1) secondary fuse. The 120 volt secondary shall have one leg grounded.

   d. Auxiliary relay contacts shall be included for thickener drive, Run, Off, alarm, and motor cut out overload signal outputs. The contacts shall be rated 10 amp, 240 VAC, resistive load.

3. Disconnect Switch

   a. A NEMA 4-non-fused disconnect switch shall be conveniently located near each component motor as required by local codes. The disconnect switch shall be pre-wired and removed for shipping if necessary.

2.4 SOURCE QUALITY CONTROL

A. Thickener components and control panel shall be factory assembled and tested to ensure proper fit and satisfactory operation. Equipment shall be shipped in the minimal practical number of pieces for minimal field assembly by the Contractor.

2.5 SHOP PAINTING

A. Stainless steel and other corrosion-resistant surfaces shall not be painted. Gearboxes, Motors, and other manufactured components will receive the manufacturer's standard weather- and corrosion-resistant coating. All fabricated steel components shall be factory primed prior to shipment with 2 coats of Tnemec Series 66 Epoxy Primer, with a total primer thickness of 6-10 mils DFT.

2.6 SPARE PARTS

A. The following spare parts shall be provided:

1. *Two (2) Hydraulic Oil Filters (for Alternate Quote)*
2. One (1) Skimmer Neoprene
3. One (1) set of squeegee blades
4. One (1) set of gaskets, seals and sealing strips
5. *One (1) set of replacement hydraulic hoses (for Alternate Quote)*

PART 3 EXECUTION

3.1 INSTALLATION AND TESTING

A. Supplier shall furnish the services of a factory-trained Service Engineer for One (1) trip and one (1) day for start-up, commissioning, and operator training once the unit is installed.

1. Equipment shall not be energized, or "bumped", to check the electrical connection for motor rotation without installation inspection and the Service Engineer present.

2. The Service Engineer shall test rotate each thickener for 2 complete revolutions, inspect the installation, and make recommendations for any necessary mechanical adjustments by the Contractor.

3. The Service Engineer shall conduct a torque test during the start-up and commissioning to demonstrate proper operation of the overload system.

4. The Service Engineer shall conduct a training for the Operators at the facility to operate, perform maintenance, and troubleshoot the mechanism and its components.

5. The Service Engineer shall provide a detailed final report of the testing and training conducted. This report shall be submitted to the City and Operators.

END OF SECTION

zima
Jagenberg Group
Manufacture.Quality.Solutions.
Kusters Water Division

1.3 – EXCLUSIONS

EXCLUSIONS

The following items are not provided by Kusters Water:

- Offloading
- Installation
- Hand railing except as noted
- Storage at our shop or jobsite
- Air vent piping
- Influent Pipe
- Any piping not proposed above
- Field painting
- Civil Design
- Buildings
- Oil and grease
- Disconnect switches and junction boxes
- Valves except as noted
- Cathodic protection
- Field verification of dimensions
- Pipe Couplings
- Erection or testing
- Concrete, grout, or sealants
- Thru-wall fittings
- Tank Covers
- Supervision of erection
- Lights or light posts
- Interconnecting walkways
- Special shipping procedures
- Engineering re-design
- Stairways and Ladders
- Electrical connections
- Electrical conduit, installation and wiring
- Grout/topping installation
- Tank Surveying
- Field verification of elevations

Absence of an exclusion herein will not be construed as meaning that the item is included, and Kusters Water will not issue credits, or accept deducts, for the provision of the items noted above.

zima
Jagenberg Group
Manufacture.Quality.Solutions.
Kusters Water Division

1.4 – QUALITY ASSURANCE

Certificate of Registration

This certifies that the Quality Management System of

Zima Corporation

101 Zima Park Drive
Spartanburg, South Carolina, 29304, United States

has been assessed by NSF-ISR and found to be in conformance to the following standard(s):

ISO 9001:2015

Scope of Registration:

The design and service provider of equipment to the wastewater industry (municipal and industrial), textile industry and local OEM markets.

Certificate Number:	C0105161-IS6
Certificate Issue Date:	26-AUG-2021
Registration Date:	10-SEP-2021
Expiration Date *:	09-SEP-2024

Jennifer Morecraft,
Senior Managing Director

NSF International Strategic Registrations

789 North Dixboro Road, Ann Arbor, Michigan 48105 | (888) NSF-9000 | www.nsf-isr.org

Authorized Registration and /or Accreditation Marks. This certificate is property of NSF-ISR and must be returned upon request.
*Company is audited for conformance at regular intervals. To verify registrations call (888) NSF-9000 or visit our web site at www.nsf-isr.org

zima
Jagenberg Group

Manufacture.Quality.Solutions.

Kusters Water Division

1.5 – WELDING

zima
Jagenberg Group
Manufacture.Quality.Solutions.
Kusters Water Division

SHOP AND FIELD WELDING
EDGE GRINDING AND SEAL-WELDING

WELDING

The equipment manufacturer's shop welding procedures, welders and welding operators shall be qualified and certified in accordance with the requirements of AWS "Welding in Building Construction" of the American Welding Society.

The equipment manufacturer's shop drawings shall clearly show complete information regarding location, type, size, and length of all field welds in accordance with "Standard Welding Symbols" AWS A2.0 of the American Welding Society. Special conditions shall be fully explained by notes or details.

The contractor (field erector) shall also perform all field welding in conformance with the information shown on the equipment manufacturer's drawings regarding location, type, size and length of all welds in accordance with "Standard Welding Symbols" AWS A2.0 of the American Welding Society, and special conditions as shown by notes and details.

All field welders and welding operators shall be qualified and certified in accordance with the requirements of AWS "Welding in Building Construction" of the American Welding Society.

EDGE GRINDING

Sharp projections of cut or sheared edges of ferrous metals which will be submerged in operation shall be ground to a radius by multiple passes of a power grinder as required to ensure satisfactory paint adherence.

SEAL WELDING

All welded joints shall be sealed watertight with continuous welds. Skip welding will not be permitted on any submerged components

zima
Jagenberg Group
Kusters Water Division

WELDING DOCUMENT WITH CERTIFICATES

Kusters Water has certified welders conforming to AWS D1.1 – Structural Carbon Steel and AWS D1.6/ D1.6M Structural Stainless-Steel. Our welders go through an initial certification (attached) per AWS D1.1/ D1.1M:2010 section 4.2.3.1 which states:

“ 4.2.3.1. Welders and Welding Operators. The welder’s or welding operator’s qualification as specified in this code shall be considered as remaining in effect indefinitely unless (1) the welder is not engaged in a given process of welding for which the welder or welding operator is qualified for a period exceeding six months or unless (2) there is some specific reason to question a welder’s or welding operator’s ability (see 4.33.1).”

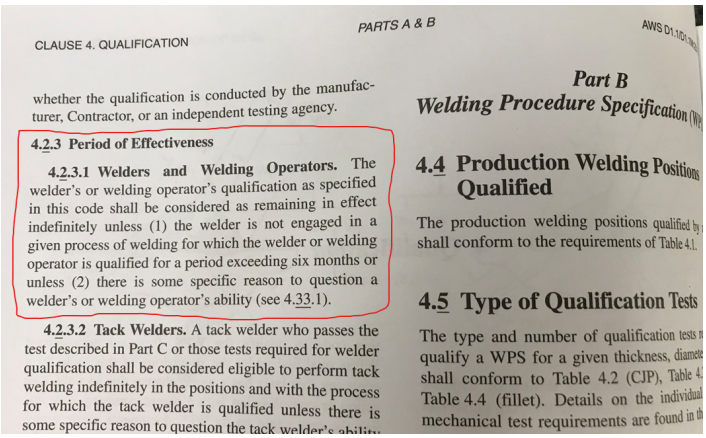
CLAUSE 4. QUALIFICATION

PARTS A & B

AWS D1.1/D1.1M

whether the qualification is conducted by the manufacturer, Contractor, or an independent testing agency.

4.2.3 Period of Effectiveness

4.2.3.1 Welders and Welding Operators. The welder’s or welding operator’s qualification as specified in this code shall be considered as remaining in effect indefinitely unless (1) the welder is not engaged in a given process of welding for which the welder or welding operator is qualified for a period exceeding six months or unless (2) there is some specific reason to question a welder’s or welding operator’s ability (see 4.33.1).

4.2.3.2 Tack Welders. A tack welder who passes the test described in Part C or those tests required for welder qualification shall be considered eligible to perform tack welding indefinitely in the positions and with the process for which the tack welder is qualified unless there is some specific reason to question the tack welder’s ability

Part B
Welding Procedure Specification (WPS)

4.4 Production Welding Positions Qualified

The production welding positions qualified by shall conform to the requirements of Table 4.1.

4.5 Type of Qualification Tests

The type and number of qualification tests qualify a WPS for a given thickness, diameter shall conform to Table 4.2 (CJP), Table 4. Table 4.4 (fillet). Details on the individual mechanical test requirements are found in th

Please see the following pages for our current qualified welder list.

Performed Welding On (Yes=Y) (No=N)
304L GTAW-TIG (304-T)
304L GMAW-MIG (304-T)
316L GTAW-TIG (316-T)
316L GMAW-MIG (316-M)
316L WITH INCONNEL 625 FILLER WIRE GTAW-TIG (316-625-T) CARBON STEEL GTAW-TIG (CS-T)
CARBON STEEL MTAW-MIG (CS-M)

JAN-JUNE 2022

Name	304-T	304-M	316-T	316-M	316-625-T	CS-T	CS-M
Steve Salmon	Y	Y	Y	Y	Y	Y	Y
Robert L Rapalee	Y	Y	Y	Y	Y	Y	Y
Jeff Rapalee	Y	Y	Y	Y	Y	Y	Y
David Hollifield	Y	Y	Y	Y	Y	Y	Y
Joel Toth	Y	Y	Y	Y	Y	Y	Y
Korey Kaylin	Y	Y	Y	Y	Y	Y	Y
Blake Elliott	Y	Y	Y	Y	N	Y	Y
Cory Elliott	Y	Y	Y	Y	N	Y	Y
James Greene	Y	Y	Y	Y	N	Y	Y
Jerry Benefield	N	N	N	N	N	N	Y
Mike Lowe	Y	Y	Y	Y	N	Y	Y

QW-484 MANUFACTURER'S RECORD OF WELDER / WELDING OPERATOR PERFORMANCE QUALIFICATION (WPQ)

(See QW-301, Section IX, ASME Boiler and Pressure Vessel Code)

Welder's Name Steve Salmon **Clock Number** _____ **Stamp No.** WK

Welding process used GTAW Type Manual

Identification of WPS followed by welder during welding of test coupon SSA (H-100)

Base material(s) welded SA240-304 Thickness 3/8"

Manual or Semiautomatic Variables for Each Process (QW-350)	**Actual Values**	**Range Qualified**
Backing (metal, weld metal, welded from both sides, flux, etc.) (QW-402)	None	With or w/o backing
ASME P-No. to ASME P-No. (QW-403)	P8 – P8	P1 to P11 & P4X
☒ Plate ☐ Pipe (Enter diameter, if pipe) (QW-403)	3/8"	Up to 3/4""
Filler metal specification (SFA): SFA 5.9 Classification (QW-404)	ER 316	
Filler metal F-No. (QW-404)	F-6	F-6
Filler metal product form [solid/cored/flux-cored - GTAW, PAW (QW-404)]	Solid	Solid
Consumable insert for GTAW or PAW (QW-404)	N/A	N/A
Weld deposit thickness for each welding process (QW-404)	3/8"	Up to 3/4""
Welding position (1G, 5G, etc.) (QW-405)	2G	1G to 2G
Progression (uphill / downhill) (QW-405)	Uphill	Uphill
Backing gas for GTAW, PAW, or GMAW; fuel gas for OFW (QW-408)	None	With or w/o backing
GMAW transfer mode (QW-409)	N/A	N/A
GTAW welding current type / polarity (QW-409)	DC Straight	DC Straight

Machine Welding Variables for the Process Used (QW-360)	**Actual Values**	**Range Qualified**
Direct / remote visual control	N/A	N/A
Automatic voltage control (GTAW)	N/A	N/A
Automatic joint tracking	N/A	N/A
Welding position (1G, 5G, etc.)	N/A	N/A
Consumable insert	N/A	N/A
Backing (metal, weld metal, welded from both sides, flux, etc.)	N/A	N/A

Guided Bend Tests

TYPE	RESULTS		
Guided Bend Test	☐ QW-462.2 (Side)	☒ QW-462.3(a) (Trans., R & F)	☐ QW-462.3(b) (Long, R & F)
Face		Passed	
Root		Passed	

Visual Examination results (QW-302.4) Acceptable

Radiographic test results (QW-304 and QW-305) N/A

(for alternative qualification of groove welds by radiography)

Fillet Weld -- Fracture Test _____ Length and percent of defects _____ in.

Macro test fusion _____ Fillet leg size _____ in. X _____ in. Concavity / convexity _____ in.

Welding test conducted by David Stamps.

Mechanical tests conducted by David Stamps Laboratory test no. N/A

We certify that the statements in this record are correct and that the test coupons were prepared, welded, and tested in accordance with the requirements of Section IX of the ASME Code.

Organization GASTON COUNTY DYEING MACHINE CO.

Date 7/14/16 By David Stamps

F:\DEPART\QA\FORMS\WLDQUREC.DOC 6/99

QW-484 MANUFACTURER'S RECORD OF WELDER / WELDING OPERATOR PERFORMANCE QUALIFICATION (WPQ)

(See QW-301, Section IX, ASME Boiler and Pressure Vessel Code)

Welder's Name Steve Salmon **Clock Number** _____ **Stamp No.** WK

Welding process used GTAW Type Manual

Identification of WPS followed by welder during welding of test coupon SSA (H-100)

Base material(s) welded SA240-304 Thickness 3/8"

Manual or Semiautomatic Variables for Each Process (QW-350)	**Actual Values**	**Range Qualified**
Backing (metal, weld metal, welded from both sides, flux, etc.) (QW-402)	None	With or w/o backing
ASME P-No. to ASME P-No. (QW-403)	P8 – P8	P1 to P11 & P4X
☒ Plate ☐ Pipe (Enter diameter, if pipe) (QW-403)	3/8"	Up to 3/4""
Filler metal specification (SFA): SFA 5.9 Classification (QW-404)	ER 316	
Filler metal F-No. (QW-404)	F-6	F-6
Filler metal product form [solid/cored/flux-cored - GTAW, PAW (QW-404)]	Solid	Solid
Consumable insert for GTAW or PAW (QW-404)	N/A	N/A
Weld deposit thickness for each welding process (QW-404)	3/8"	Up to 3/4""
Welding position (1G, 5G, etc.) (QW-405)	2G	1G to 2G
Progression (uphill / downhill) (QW-405)	Uphill	Uphill
Backing gas for GTAW, PAW, or GMAW; fuel gas for OFW (QW-408)	None	With or w/o backing
GMAW transfer mode (QW-409)	N/A	N/A
GTAW welding current type / polarity (QW-409)	DC Straight	DC Straight

Machine Welding Variables for the Process Used (QW-360)	**Actual Values**	**Range Qualified**
Direct / remote visual control	N/A	N/A
Automatic voltage control (GTAW)	N/A	N/A
Automatic joint tracking	N/A	N/A
Welding position (1G, 5G, etc.)	N/A	N/A
Consumable insert	N/A	N/A
Backing (metal, weld metal, welded from both sides, flux, etc.)	N/A	N/A

Guided Bend Tests

TYPE	RESULTS		
Guided Bend Test	☐ QW-462.2 (Side)	☒ QW-462.3(a) (Trans., R & F)	☐ QW-462.3(b) (Long, R & F)
Face		Passed	
Root		Passed	

Visual Examination results (QW-302.4) Acceptable

Radiographic test results (QW-304 and QW-305) N/A

(for alternative qualification of groove welds by radiography)

Fillet Weld -- Fracture Test _____ Length and percent of defects _____ in.

Macro test fusion _____ Fillet leg size _____ in. X _____ in. Concavity / convexity _____ in.

Welding test conducted by David Stamps.

Mechanical tests conducted by David Stamps Laboratory test no. N/A

We certify that the statements in this record are correct and that the test coupons were prepared, welded, and tested in accordance with the requirements of Section IX of the ASME Code.

Organization GASTON COUNTY DYEING MACHINE CO.

Date 7/14/16 By David Stamps

F:\DEPART\QA\FORMS\WLDQUREC.DOC 6/99

QW-484 MANUFACTURER'S RECORD OF WELDER / WELDING OPERATOR PERFORMANCE QUALIFICATION (WPQ)

(See QW-301, Section IX, ASME Boiler and Pressure Vessel Code)

Welder's Name Steve Salmon **Clock Number** _____ **Stamp No.** WK

Welding process used GMAW Type Hand Held Semi-Auto

Identification of WPS followed by welder during welding of test coupon SSA A-100

Base material(s) welded SA240-304 Thickness 3/8"

Manual or Semiautomatic Variables for Each Process (QW-350)	**Actual Values**	**Range Qualified**
Backing (metal, weld metal, welded from both sides, flux, etc.) (QW-402)	None	With or w/o backing
ASME P-No. to ASME P-No. (QW-403)	P8 – P8	P1 to P11 & P4X
☒ Plate ☐ Pipe (Enter diameter, if pipe) (QW-403)	3/8"	Up to 3/4""
Filler metal specification (SFA): SFA 5.9 Classification (QW-404)	ER 308	
Filler metal F-No. (QW-404)	F-6	F-6
Filler metal product form [solid/cored/flux-cored - GTAW, PAW (QW-404)]	Solid	Solid
Consumable insert for GTAW or PAW (QW-404)	N/A	N/A
Weld deposit thickness for each welding process (QW-404)	3/8"	Up to 3/4""
Welding position (1G, 5G, etc.) (QW-405)	2G	1G to 2G
Progression (uphill / downhill) (QW-405)	Uphill	N/A Uphill
Backing gas for GTAW, PAW, or GMAW; fuel gas for OFW (QW-408)	None	With or w/o backing
GMAW transfer mode (QW-409)	Globular	Spray, Glob or Pulse
GTAW welding current type / polarity (QW-409)	N/A	N/A

Machine Welding Variables for the Process Used (QW-360)	**Actual Values**	**Range Qualified**
Direct / remote visual control	N/A	N/A
Automatic voltage control (GTAW)	N/A	N/A
Automatic joint tracking	N/A	N/A
Welding position (1G, 5G, etc.)	N/A	N/A
Consumable insert	N/A	N/A
Backing (metal, weld metal, welded from both sides, flux, etc.)	N/A	N/A

Guided Bend Tests

TYPE	RESULTS		
Guided Bend Test	☐ QW-462.2 (Side)	☒ QW-462.3(a) (Trans., R & F)	☐ QW-462.3(b) (Long, R & F)
Face		Passed	
Root		Passed	

Visual Examination results (QW-302.4) Acceptable

Radiographic test results (QW-304 and QW-305) N/A

(for alternative qualification of groove welds by radiography)

Fillet Weld -- Fracture Test _____ Length and percent of defects _____ in.

Macro test fusion _____ Fillet leg size _____ in. X _____ in. Concavity / convexity _____ in.

Welding test conducted by David Stamps.

Mechanical tests conducted by David Stamps Laboratory test no. N/A

We certify that the statements in this record are correct and that the test coupons were prepared, welded, and tested in accordance with the requirements of Section IX of the ASME Code.

Organization GASTON COUNTY DYEING MACHINE CO.

Date 7/20/16 By David Stamps

F:\DEPART\QA\FORMS\WLDQUREC.DOC 6/99

QW-484 MANUFACTURER'S RECORD OF WELDER / WELDING OPERATOR PERFORMANCE QUALIFICATION (WPQ)

(See QW-301, Section IX, ASME Boiler and Pressure Vessel Code)

Welder's Name Robert Rapalee **Clock Number** _____ **Stamp No.** WM

Welding process used GTAW Type Manual

Identification of WPS followed by welder during welding of test coupon SSA (H-100)

Base material(s) welded SA240-304 Thickness 3/8"

Manual or Semiautomatic Variables for Each Process (QW-350)	**Actual Values**	**Range Qualified**
Backing (metal, weld metal, welded from both sides, flux, etc.) (QW-402)	None	With or w/o backing
ASME P-No. to ASME P-No. (QW-403)	P8 – P8	P1 to P11 & P4X
☒ Plate ☐ Pipe (Enter diameter, if pipe) (QW-403)	3/8"	Up to 3/4""
Filler metal specification (SFA): SFA 5.9 Classification (QW-404)	ER 316	
Filler metal F-No. (QW-404)	F-6	F-6
Filler metal product form [solid/cored/flux-cored - GTAW, PAW (QW-404)]	Solid	Solid
Consumable insert for GTAW or PAW (QW-404)	N/A	N/A
Weld deposit thickness for each welding process (QW-404)	3/8"	Up to 3/4""
Welding position (1G, 5G, etc.) (QW-405)	2G	1G to 2G
Progression (uphill / downhill) (QW-405)	Uphill	Uphill
Backing gas for GTAW, PAW, or GMAW; fuel gas for OFW (QW-408)	None	With or w/o backing
GMAW transfer mode (QW-409)	N/A	N/A
GTAW welding current type / polarity (QW-409)	DC Straight	DC Straight

Machine Welding Variables for the Process Used (QW-360)	**Actual Values**	**Range Qualified**
Direct / remote visual control	N/A	N/A
Automatic voltage control (GTAW)	N/A	N/A
Automatic joint tracking	N/A	N/A
Welding position (1G, 5G, etc.)	N/A	N/A
Consumable insert	N/A	N/A
Backing (metal, weld metal, welded from both sides, flux, etc.)	N/A	N/A

Guided Bend Tests

TYPE	RESULTS		
Guided Bend Test	☐ QW-462.2 (Side)	☒ QW-462.3(a) (Trans., R & F)	☐ QW-462.3(b) (Long, R & F)
Face		Passed	
Root		Passed	

Visual Examination results (QW-302.4) Acceptable

Radiographic test results (QW-304 and QW-305) N/A

(for alternative qualification of groove welds by radiography)

Fillet Weld -- Fracture Test _____ Length and percent of defects _____ in.

Macro test fusion _____ Fillet leg size _____ in. X _____ in. Concavity / convexity _____ in.

Welding test conducted by David Stamps.

Mechanical tests conducted by David Stamps Laboratory test no. N/A

We certify that the statements in this record are correct and that the test coupons were prepared, welded, and tested in accordance with the requirements of Section IX of the ASME Code.

Organization GASTON COUNTY DYEING MACHINE CO.

Date 7/14/16 By [signature]

F:\DEPART\QA\FORMS\WLDQUREC.DOC 6/99

QW-484 MANUFACTURER'S RECORD OF WELDER / WELDING OPERATOR PERFORMANCE QUALIFICATION (WPQ)

(See QW-301, Section IX, ASME Boiler and Pressure Vessel Code)

Welder's Name Robert Rapalee **Clock Number** _____ **Stamp No.** WM

Welding process used GMAW Type Hand Held Semi-Auto

Identification of WPS followed by welder during welding of test coupon SSA A-100

Base material(s) welded SA240-304 Thickness 3/8"

Manual or Semiautomatic Variables for Each Process (QW-350)	**Actual Values**	**Range Qualified**
Backing (metal, weld metal, welded from both sides, flux, etc.) (QW-402)	None	With or w/o backing
ASME P-No. to ASME P-No. (QW-403)	P8 – P8	P1 to P11 & P4X
☒ Plate ☐ Pipe (Enter diameter, if pipe) (QW-403)	3/8"	Up to 3/4""
Filler metal specification (SFA): SFA 5.9 Classification (QW-404)	ER 308	
Filler metal F-No. (QW-404)	F-6	F-6
Filler metal product form [solid/cored/flux-cored - GTAW, PAW (QW-404)]	Solid	Solid
Consumable insert for GTAW or PAW (QW-404)	N/A	N/A
Weld deposit thickness for each welding process (QW-404)	3/8"	Up to 3/4""
Welding position (1G, 5G, etc.) (QW-405)	2G	1G to 2G
Progression (uphill / downhill) (QW-405)	Uphill	N/A Uphill
Backing gas for GTAW, PAW, or GMAW; fuel gas for OFW (QW-408)	None	With or w/o backing
GMAW transfer mode (QW-409)	Globular	Spray, Glob or Pulse
GTAW welding current type / polarity (QW-409)	N/A	N/A

Machine Welding Variables for the Process Used (QW-360)	**Actual Values**	**Range Qualified**
Direct / remote visual control	N/A	N/A
Automatic voltage control (GTAW)	N/A	N/A
Automatic joint tracking	N/A	N/A
Welding position (1G, 5G, etc.)	N/A	N/A
Consumable insert	N/A	N/A
Backing (metal, weld metal, welded from both sides, flux, etc.)	N/A	N/A

Guided Bend Tests

TYPE	RESULTS		
Guided Bend Test	☐ QW-462.2 (Side)	☒ QW-462.3(a) (Trans., R & F)	☐ QW-462.3(b) (Long, R & F)
Face		Passed	
Root		Passed	

Visual Examination results (QW-302.4) Acceptable

Radiographic test results (QW-304 and QW-305) N/A

(for alternative qualification of groove welds by radiography)

Fillet Weld -- Fracture Test _____ Length and percent of defects _____ in.

Macro test fusion _____ Fillet leg size _____ in. X _____ in. Concavity / convexity _____ in.

Welding test conducted by David Stamps.

Mechanical tests conducted by David Stamps Laboratory test no. N/A

We certify that the statements in this record are correct and that the test coupons were prepared, welded, and tested in accordance with the requirements of Section IX of the ASME Code.

Organization GASTON COUNTY DYEING MACHINE CO.

Date 7/14/16 By David Stamps

F:\DEPART\QA\FORMS\WLDQUREC.DOC 6/99

QW-484 MANUFACTURER'S RECORD OF WELDER / WELDING OPERATOR PERFORMANCE QUALIFICATION (WPQ)

(See QW-301, Section IX, ASME Boiler and Pressure Vessel Code)

Welder's Name Jeff Rapalee **Clock Number** _____ **Stamp No.** WL

Welding process used GTAW Type Manual

Identification of WPS followed by welder during welding of test coupon SSA (H-100)

Base material(s) welded SA240-304 Thickness 3/8"

Manual or Semiautomatic Variables for Each Process (QW-350)	**Actual Values**	**Range Qualified**
Backing (metal, weld metal, welded from both sides, flux, etc.) (QW-402)	None	With or w/o backing
ASME P-No. to ASME P-No. (QW-403)	P8 – P8	P1 to P11 & P4X
☒ Plate ☐ Pipe (Enter diameter, if pipe) (QW-403)	3/8"	Up to 3/4""
Filler metal specification (SFA): SFA 5.9 Classification (QW-404)	ER 316	
Filler metal F-No. (QW-404)	F-6	F-6
Filler metal product form [solid/cored/flux-cored - GTAW, PAW (QW-404)]	Solid	Solid
Consumable insert for GTAW or PAW (QW-404)	N/A	N/A
Weld deposit thickness for each welding process (QW-404)	3/8"	Up to 3/4""
Welding position (1G, 5G, etc.) (QW-405)	2G	1G to 2G
Progression (uphill / downhill) (QW-405)	Uphill	Uphill
Backing gas for GTAW, PAW, or GMAW; fuel gas for OFW (QW-408)	None	With or w/o backing
GMAW transfer mode (QW-409)	N/A	N/A
GTAW welding current type / polarity (QW-409)	DC Straight	DC Straight

Machine Welding Variables for the Process Used (QW-360)	**Actual Values**	**Range Qualified**
Direct / remote visual control	N/A	N/A
Automatic voltage control (GTAW)	N/A	N/A
Automatic joint tracking	N/A	N/A
Welding position (1G, 5G, etc.)	N/A	N/A
Consumable insert	N/A	N/A
Backing (metal, weld metal, welded from both sides, flux, etc.)	N/A	N/A

Guided Bend Tests

TYPE	RESULTS		
Guided Bend Test	☐ QW-462.2 (Side)	☒ QW-462.3(a) (Trans., R & F)	☐ QW-462.3(b) (Long, R & F)
Face		Passed	
Root		Passed	

Visual Examination results (QW-302.4) Acceptable

Radiographic test results (QW-304 and QW-305) N/A

(for alternative qualification of groove welds by radiography)

Fillet Weld -- Fracture Test _____ Length and percent of defects _____ in.

Macro test fusion _____ Fillet leg size _____ in. X _____ in. Concavity / convexity _____ in.

Welding test conducted by David Stamps.

Mechanical tests conducted by David Stamps Laboratory test no. N/A

We certify that the statements in this record are correct and that the test coupons were prepared, welded, and tested in accordance with the requirements of Section IX of the ASME Code.

Organization GASTON COUNTY DYEING MACHINE CO.

Date 7/14/16 By [signature]

F:\DEPART\QA\FORMS\WLDQUREC.DOC 6/99

QW-484 MANUFACTURER'S RECORD OF WELDER / WELDING OPERATOR PERFORMANCE QUALIFICATION (WPQ)

(See QW-301, Section IX, ASME Boiler and Pressure Vessel Code)

Welder's Name Jeff Rapalee **Clock Number** _____ **Stamp No.** WL

Welding process used GMAW Type Hand Held Semi-Auto

Identification of WPS followed by welder during welding of test coupon SSA A-100

Base material(s) welded SA240-304 Thickness 3/8"

Manual or Semiautomatic Variables for Each Process (QW-350)	**Actual Values**	**Range Qualified**
Backing (metal, weld metal, welded from both sides, flux, etc.) (QW-402)	None	With or w/o backing
ASME P-No. to ASME P-No. (QW-403)	P8 – P8	P1 to P11 & P4X
☒ Plate ☐ Pipe (Enter diameter, if pipe) (QW-403)	3/8"	Up to 3/4""
Filler metal specification (SFA): SFA 5.9 Classification (QW-404)	ER 308	
Filler metal F-No. (QW-404)	F-6	F-6
Filler metal product form [solid/cored/flux-cored - GTAW, PAW (QW-404)]	Solid	Solid
Consumable insert for GTAW or PAW (QW-404)	N/A	N/A
Weld deposit thickness for each welding process (QW-404)	3/8"	Up to 3/4""
Welding position (1G, 5G, etc.) (QW-405)	2G	1G to 2G
Progression (uphill / downhill) (QW-405)	Uphill	N/A Uphill
Backing gas for GTAW, PAW, or GMAW; fuel gas for OFW (QW-408)	None	With or w/o backing
GMAW transfer mode (QW-409)	Globular	Spray, Glob or Pulse
GTAW welding current type / polarity (QW-409)	N/A	N/A

Machine Welding Variables for the Process Used (QW-360)	**Actual Values**	**Range Qualified**
Direct / remote visual control	N/A	N/A
Automatic voltage control (GTAW)	N/A	N/A
Automatic joint tracking	N/A	N/A
Welding position (1G, 5G, etc.)	N/A	N/A
Consumable insert	N/A	N/A
Backing (metal, weld metal, welded from both sides, flux, etc.)	N/A	N/A

Guided Bend Tests

TYPE	RESULTS		
Guided Bend Test	☐ QW-462.2 (Side)	☒ QW-462.3(a) (Trans., R & F)	☐ QW-462.3(b) (Long, R & F)
Face		Passed	
Root		Passed	

Visual Examination results (QW-302.4) Acceptable

Radiographic test results (QW-304 and QW-305) N/A

(for alternative qualification of groove welds by radiography)

Fillet Weld -- Fracture Test _____ Length and percent of defects _____ in.

Macro test fusion _____ Fillet leg size _____ in. X _____ in. Concavity / convexity _____ in.

Welding test conducted by David Stamps.

Mechanical tests conducted by David Stamps Laboratory test no. N/A

We certify that the statements in this record are correct and that the test coupons were prepared, welded, and tested in accordance with the requirements of Section IX of the ASME Code.

Organization GASTON COUNTY DYEING MACHINE CO.

Date 7/14/16 By David Stamps

F:\DEPART\QA\FORMS\WLDQUREC.DOC 6/99

QW-484 MANUFACTURER'S RECORD OF WELDER / WELDING OPERATOR PERFORMANCE QUALIFICATION (WPQ)

(See QW-301, Section IX, ASME Boiler and Pressure Vessel Code)

Welder's Name David Hollifield **Clock Number** _____ **Stamp No.** WN

Welding process used GTAW Type Manual

Identification of WPS followed by welder during welding of test coupon SSA (H-100)

Base material(s) welded SA240-304 Thickness 3/8"

Manual or Semiautomatic Variables for Each Process (QW-350)	**Actual Values**	**Range Qualified**
Backing (metal, weld metal, welded from both sides, flux, etc.) (QW-402)	None	With or w/o backing
ASME P-No. to ASME P-No. (QW-403)	P8 – P8	P1 to P11 & P4X
☒ Plate ☐ Pipe (Enter diameter, if pipe) (QW-403)	3/8"	Up to 3/4""
Filler metal specification (SFA): SFA 5.9 Classification (QW-404)	ER 316	
Filler metal F-No. (QW-404)	F-6	F-6
Filler metal product form [solid/cored/flux-cored - GTAW, PAW (QW-404)]	Solid	Solid
Consumable insert for GTAW or PAW (QW-404)	N/A	N/A
Weld deposit thickness for each welding process (QW-404)	3/8"	Up to 3/4""
Welding position (1G, 5G, etc.) (QW-405)	2G	1G to 2G
Progression (uphill / downhill) (QW-405)	Uphill	Uphill
Backing gas for GTAW, PAW, or GMAW; fuel gas for OFW (QW-408)	None	With or w/o backing
GMAW transfer mode (QW-409)	N/A	N/A
GTAW welding current type / polarity (QW-409)	DC Straight	DC Straight

Machine Welding Variables for the Process Used (QW-360)	**Actual Values**	**Range Qualified**
Direct / remote visual control	N/A	N/A
Automatic voltage control (GTAW)	N/A	N/A
Automatic joint tracking	N/A	N/A
Welding position (1G, 5G, etc.)	N/A	N/A
Consumable insert	N/A	N/A
Backing (metal, weld metal, welded from both sides; flux, etc.)	N/A	N/A

Guided Bend Tests

TYPE	RESULTS		
Guided Bend Test	☐ QW-462.2 (Side)	☒ QW-462.3(a) (Trans., R & F)	☐ QW-462.3(b) (Long, R & F)
Face		Passed	
Root		Passed	

Visual Examination results (QW-302.4) Acceptable

Radiographic test results (QW-304 and QW-305) N/A

(for alternative qualification of groove welds by radiography)

Fillet Weld -- Fracture Test _____ Length and percent of defects _____ in.

Macro test fusion _____ Fillet leg size _____ in. X _____ in. Concavity / convexity _____ in.

Welding test conducted by David Stamps.

Mechanical tests conducted by David Stamps Laboratory test no. N/A

We certify that the statements in this record are correct and that the test coupons were prepared, welded, and tested in accordance with the requirements of Section IX of the ASME Code.

Organization GASTON COUNTY DYEING MACHINE CO.

Date 7/14/16 By David Stamps

F:\DEPART\QA\FORMS\WLDQUREC.DOC 6/99

QW-484 MANUFACTURER'S RECORD OF WELDER / WELDING OPERATOR PERFORMANCE QUALIFICATION (WPQ)

(See QW-301, Section IX, ASME Boiler and Pressure Vessel Code)

Welder's Name David Hollifield **Clock Number** _____ **Stamp No.** WN

Welding process used GTAW Type Manual

Identification of WPS followed by welder during welding of test coupon SSA (H-100)

Base material(s) welded SA240-304 Thickness 3/8"

Manual or Semiautomatic Variables for Each Process (QW-350)	**Actual Values**	**Range Qualified**
Backing (metal, weld metal, welded from both sides, flux, etc.) (QW-402)	None	With or w/o backing
ASME P-No. to ASME P-No. (QW-403)	P8 -- P8	P1 to P11 & P4X
☒ Plate ☐ Pipe (Enter diameter, if pipe) (QW-403)	3/8"	Up to 3/4""
Filler metal specification (SFA): SFA 5.9 Classification (QW-404)	ER 316	
Filler metal F-No. (QW-404)	F-6	F-6
Filler metal product form [solid/cored/flux-cored - GTAW, PAW (QW-404)]	Solid	Solid
Consumable insert for GTAW or PAW (QW-404)	N/A	N/A
Weld deposit thickness for each welding process (QW-404)	3/8"	Up to 3/4""
Welding position (1G, 5G, etc.) (QW-405)	2G	1G to 2G
Progression (uphill / downhill) (QW-405)	Uphill	Uphill
Backing gas for GTAW, PAW, or GMAW; fuel gas for OFW (QW-408)	None	With or w/o backing
GMAW transfer mode (QW-409)	N/A	N/A
GTAW welding current type / polarity (QW-409)	DC Straight	DC Straight

Machine Welding Variables for the Process Used (QW-360)	**Actual Values**	**Range Qualified**
Direct / remote visual control	N/A	N/A
Automatic voltage control (GTAW)	N/A	N/A
Automatic joint tracking	N/A	N/A
Welding position (1G, 5G, etc.)	N/A	N/A
Consumable insert	N/A	N/A
Backing (metal, weld metal, welded from both sides; flux, etc.)	N/A	N/A

Guided Bend Tests

TYPE	RESULTS		
Guided Bend Test	☐ QW-462.2 (Side)	☒ QW-462.3(a) (Trans., R & F)	☐ QW-462.3(b) (Long, R & F)
Face		Passed	
Root		Passed	

Visual Examination results (QW-302.4) Acceptable

Radiographic test results (QW-304 and QW-305) N/A

(for alternative qualification of groove welds by radiography)

Fillet Weld -- Fracture Test _____ Length and percent of defects _____ in.

Macro test fusion _____ Fillet leg size _____ in. X _____ in. Concavity / convexity _____ in.

Welding test conducted by David Stamps.

Mechanical tests conducted by David Stamps Laboratory test no. N/A

We certify that the statements in this record are correct and that the test coupons were prepared, welded, and tested in accordance with the requirements of Section IX of the ASME Code.

Organization GASTON COUNTY DYEING MACHINE CO.

Date 7/14/16 By David Stamps

F:\DEPART\QA\FORMS\WLDQUREC.DOC 6/99

QW-484 MANUFACTURER'S RECORD OF WELDER / WELDING OPERATOR PERFORMANCE QUALIFICATION (WPQ)

(See QW-301, Section IX, ASME Boiler and Pressure Vessel Code)

Welder's Name David Hollifield **Clock Number** _____ **Stamp No.** WN

Welding process used GMAW Type Hand Held Semi-Auto

Identification of WPS followed by welder during welding of test coupon SSA A-100

Base material(s) welded SA240-304 Thickness 3/8"

Manual or Semiautomatic Variables for Each Process (QW-350)	**Actual Values**	**Range Qualified**
Backing (metal, weld metal, welded from both sides, flux, etc.) (QW-402)	None	With or w/o backing
ASME P-No. to ASME P-No. (QW-403)	P8 – P8	P1 to P11 & P4X
☒ Plate ☐ Pipe (Enter diameter, if pipe) (QW-403)	3/8"	Up to 3/4""
Filler metal specification (SFA): SFA 5.9 Classification (QW-404)	ER 308	
Filler metal F-No. (QW-404)	F-6	F-6
Filler metal product form [solid/cored/flux-cored - GTAW, PAW (QW-404)]	Solid	Solid
Consumable insert for GTAW or PAW (QW-404)	N/A	N/A
Weld deposit thickness for each welding process (QW-404)	3/8"	Up to 3/4""
Welding position (1G, 5G, etc.) (QW-405)	2G	1G to 2G
Progression (uphill / downhill) (QW-405)	Uphill	N/A Uphill
Backing gas for GTAW, PAW, or GMAW; fuel gas for OFW (QW-408)	None	With or w/o backing
GMAW transfer mode (QW-409)	Globular	Spray, Glob or Pulse
GTAW welding current type / polarity (QW-409)	N/A	N/A

Machine Welding Variables for the Process Used (QW-360)	**Actual Values**	**Range Qualified**
Direct / remote visual control	N/A	N/A
Automatic voltage control (GTAW)	N/A	N/A
Automatic joint tracking	N/A	N/A
Welding position (1G, 5G, etc.)	N/A	N/A
Consumable insert	N/A	N/A
Backing (metal, weld metal, welded from both sides, flux, etc.)	N/A	N/A

Guided Bend Tests

TYPE	RESULTS		
Guided Bend Test	☐ QW-462.2 (Side)	☒ QW-462.3(a) (Trans., R & F)	☐ QW-462.3(b) (Long, R & F)
Face		Passed	
Root		Passed	

Visual Examination results (QW-302.4) Acceptable

Radiographic test results (QW-304 and QW-305) N/A

(for alternative qualification of groove welds by radiography)

Fillet Weld -- Fracture Test _____ Length and percent of defects _____ in.

Macro test fusion _____ Fillet leg size _____ in. _____ in. Concavity / convexity _____ in.

Welding test conducted by David Stamps.

Mechanical tests conducted by David Stamps Laboratory test no. N/A

We certify that the statements in this record are correct and that the test coupons were prepared, welded, and tested in accordance with the requirements of Section IX of the ASME Code.

Organization GASTON COUNTY DYEING MACHINE CO.

Date 7/20/16 By David Stamps

F:\DEPART\QA\FORMS\WLDQUREC.DOC 6/99

QW-484 MANUFACTURER'S RECORD OF WELDER / WELDING OPERATOR PERFORMANCE QUALIFICATION (WPQ)

(See QW-301, Section IX, ASME Boiler and Pressure Vessel Code)

Welder's Name Kory Kaylin **Clock Number** _____ **Stamp No.** WR

Welding process used GTAW Type Manual

Identification of WPS followed by welder during welding of test coupon SSA (H-100)

Base material(s) welded SA240-304 Thickness 3/8"

Manual or Semiautomatic Variables for Each Process (QW-350)	**Actual Values**	**Range Qualified**
Backing (metal, weld metal, welded from both sides, flux, etc.) (QW-402)	None	With or w/o backing
ASME P-No. to ASME P-No. (QW-403)	P8 -- P8	P1 to P11 & P4X
☒ Plate ☐ Pipe (Enter diameter, if pipe) (QW-403)	3/8"	Up to 3/4""
Filler metal specification (SFA): SFA 5.9 Classification (QW-404)	ER 316	
Filler metal F-No. (QW-404)	F-6	F-6
Filler metal product form [solid/cored/flux-cored - GTAW, PAW (QW-404)]	Solid	Solid
Consumable insert for GTAW or PAW (QW-404)	N/A	N/A
Weld deposit thickness for each welding process (QW-404)	3/8"	Up to 3/4""
Welding position (1G, 5G, etc.) (QW-405)	2G	1G to 2G
Progression (uphill / downhill) (QW-405)	Uphill	Uphill
Backing gas for GTAW, PAW, or GMAW; fuel gas for OFW (QW-408)	None	With or w/o backing
GMAW transfer mode (QW-409)	N/A	N/A
GTAW welding current type / polarity (QW-409)	DC Straight	DC Straight

Machine Welding Variables for the Process Used (QW-360)	**Actual Values**	**Range Qualified**
Direct / remote visual control	N/A	N/A
Automatic voltage control (GTAW)	N/A	N/A
Automatic joint tracking	N/A	N/A
Welding position (1G, 5G, etc.)	N/A	N/A
Consumable insert	N/A	N/A
Backing (metal, weld metal, welded from both sides, flux, etc.)	N/A	N/A

Guided Bend Tests

TYPE	RESULTS		
Guided Bend Test	☐ QW-462.2 (Side)	☒ QW-462.3(a) (Trans., R & F)	☐ QW-462.3(b) (Long, R & F)
Face		Passed	
Root		Passed	

Visual Examination results (QW-302.4) Acceptable

Radiographic test results (QW-304 and QW-305) N/A

(for alternative qualification of groove welds by radiography)

Fillet Weld -- Fracture Test _____ Length and percent of defects _____ in.

Macro test fusion _____ Fillet leg size _____ in. X _____ in. Concavity / convexity _____ in.

Welding test conducted by David Stamps.

Mechanical tests conducted by David Stamps Laboratory test no. N/A

We certify that the statements in this record are correct and that the test coupons were prepared, welded, and tested in accordance with the requirements of Section IX of the ASME Code.

Organization GASTON COUNTY DYEING MACHINE CO.

Date 7/20/16 By David Stamps

F:\DEPART\QA\FORMS\WLDQUREC.DOC 6/99

KUSTERS ZIMA

AMERICAN WELDING SOCIETY
WELDER QUALIFICATION TEST
D1.1/2010

CLIENT: **Kuster - Zima** DATE: May 5, 2015 JOB NO. 3626-14-003

WELDER NAME	David Hollifield	SS #	XXX-XX-2666
BASE METAL	A572 Grade 50	WELD SIZE	Fill Groove
FILLER MATERIAL	.035-ER70S-6	POSITION	3G
WELDING PROCESS	GMAW	PLATE THICKNESS	1"
VISUAL INSPECTION			
FILLET WELD		GROOVE WELD	
PROFILE	N/A	PLATE GROOVE	Accepted
PENETRATION	N/A	APPEARANCE	Accepted
BEND TEST			
FILLET WELD		GROOVE WELD	
BEND TEST	N/A	FACE BEND	Accepted
ETCH TEST	N/A	ROOT BEND	Accepted
SATE	4/29/15	TECHNICIAN	Chris Meeks, CWI
RADIOGRAPHIC TEST TEST COUPON			
ACCEPTED	N/A	REJECTED	N/A
DATE	N/A	TECHNICIAN	N/A

(3G) Vertical position qualifies for flat and vertical positions of groove welding of plate and pipe (Over 24 in.) ; flat, horizontal, and vertical position of fillet welding of plate; and flat, horizontal and vertical position of pipe fillet welding.

Christopher T Meeks
CWI 02060881
QC1 EXP 6/1/2017

CLIENT PROCEDURE NO.: 14-003-G SIGNED: Chris Meeks

We, the undersigned, certify that the statements in this record are correct and that the test welds were prepared, welded, and tested in conformance with the requirements of Section 4 of AWS D1.1, *Structural Welding Code-Steel.*

Authorized By: Lonnie Stan Date: 5/5/2015

KUSTERS ZIMA

AMERICAN WELDING SOCIETY
WELDER QUALIFICATION TEST
D1.1/2010

CLIENT: **Kuster - Zima** DATE: May 5, 2015 JOB NO. 3626-14-003

WELDER NAME	Lance Rapalee	SS #	XXX-XX-6716
BASE METAL	A572 Grade 50	WELD SIZE	Fill Groove
FILLER MATERIAL	.035-ER70S-6	POSITION	3G
WELDING PROCESS	GMAW	PLATE THICKNESS	1"
VISUAL INSPECTION			
FILLET WELD		GROOVE WELD	
PROFILE	N/A	PLATE GROOVE	Accepted
PENETRATION	N/A	APPEARANCE	Accepted
BEND TEST			
FILLET WELD		GROOVE WELD	
BEND TEST	N/A	FACE BEND	Accepted
ETCH TEST	N/A	ROOT BEND	Accepted
SATE	4/29/15	TECHNICIAN	Chris Meeks, CWI
RADIOGRAPHIC TEST TEST COUPON			
ACCEPTED	N/A	REJECTED	N/A
DATE	N/A	TECHNICIAN	N/A

(3G) Vertical position qualifies for flat and vertical positions of groove welding of plate and pipe (Over 24 in.) ; flat, horizontal, and vertical position of fillet welding of plate; and flat, horizontal and vertical position of pipe fillet welding.

Christopher T Meeks
CWI 02060881
QC1 EXP. 6/1/2017

CLIENT PROCEDURE NO.: 14-003-G SIGNED: _____

We, the undersigned, certify that the statements in this record are correct and that the test welds were prepared, welded, and tested in conformance with the requirements of Section 4 of AWS D1.1, *Structural Welding Code-Steel.*

Authorized By: Lonnie Stamm Date: 5/5/2015

KUSTERS ZIMA

AMERICAN WELDING SOCIETY
WELDER QUALIFICATION TEST
D1.1/2010

CLIENT: **Kuster - Zima** DATE: May 5, 2015 JOB NO. 3626-14-003

WELDER NAME	Korey Kaylin	SS #	XXX-XX-5440
BASE METAL	A572 Grade 50	WELD SIZE	Fill Groove
FILLER MATERIAL	.035-ER70S-6	POSITION	3G
WELDING PROCESS	GMAW	PLATE THICKNESS	1"
VISUAL INSPECTION			
FILLET WELD		GROOVE WELD	
PROFILE	N/A	PLATE GROOVE	Accepted
PENETRATION	N/A	APPEARANCE	Accepted
BEND TEST			
FILLET WELD		GROOVE WELD	
BEND TEST	N/A	FACE BEND	Accepted
ETCH TEST	N/A	ROOT BEND	Accepted
SATE	4/29/15	TECHNICIAN	Chris Meeks, CWI
RADIOGRAPHIC TEST TEST COUPON			
ACCEPTED	N/A	REJECTED	N/A
DATE	N/A	TECHNICIAN	N/A

(3G) Vertical position qualifies for flat and vertical positions of groove welding of plate and pipe (Over 24 in.) ; flat, horizontal, and vertical position of fillet welding of plate; and flat, horizontal and vertical position of pipe fillet welding.

AWS Christopher T Meeks CWI 02060881 GC1 EXP: 6/1/2017

CLIENT PROCEDURE NO.: 14-003-G SIGNED: Chris Meeks

We, the undersigned, certify that the statements in this record are correct and that the test welds were prepared, welded, and tested in conformance with the requirements of Section 4 of AWS D1.1, *Structural Welding Code-Steel.*

Authorized By: Tommie Stern Date: 5/5/2015

KUSTERS ZIMA

AMERICAN WELDING SOCIETY
WELDER QUALIFICATION TEST
D1.1/2010

CLIENT: **Kuster - Zima** DATE: May 5, 2015 JOB NO. 3626-14-003

WELDER NAME	Steve Salmon	SS #	XXX-XX-1217
BASE METAL	A572 Grade 50	WELD SIZE	Fill Groove
FILLER MATERIAL	.035-ER70S-6	POSITION	3G
WELDING PROCESS	GMAW	PLATE THICKNESS	1"
VISUAL INSPECTION			
FILLET WELD		GROOVE WELD	
PROFILE	N/A	PLATE GROOVE	Accepted
PENETRATION	N/A	APPEARANCE	Accepted
BEND TEST			
FILLET WELD		GROOVE WELD	
BEND TEST	N/A	FACE BEND	Accepted
ETCH TEST	N/A	ROOT BEND	Accepted
SATE	4/29/15	TECHNICIAN	Chris Meeks, CWI
RADIOGRAPHIC TEST TEST COUPON			
ACCEPTED	N/A	REJECTED	N/A
DATE	N/A	TECHNICIAN	N/A

(3G) Vertical position qualifies for flat and vertical positions of groove welding of plate and pipe (Over 24 in.) ; flat, horizontal, and vertical position of fillet welding of plate; and flat, horizontal and vertical position of pipe fillet welding.

Christopher T Meeks
CWI 02060981
QC1 EXP. 6/1/2017

CLIENT PROCEDURE NO.: 14-003-G SIGNED: Chris Meeks

We, the undersigned, certify that the statements in this record are correct and that the test welds were prepared, welded, and tested in conformance with the requirements of Section 4 of AWS D1.1, *Structural Welding Code-Steel.*

Authorized By: Lonnie Stone Date: 5/5/2015

KUSTERS ZIMA

AMERICAN WELDING SOCIETY
WELDER QUALIFICATION TEST
D1.1/2010

CLIENT: **Kuster - Zima** DATE: May 5, 2015 JOB NO. 3626-14-003

WELDER NAME	Jeff Rapalee	SS #	XXX-XX-1405
BASE METAL	A572 Grade 50	WELD SIZE	Fill Groove
FILLER MATERIAL	.035-ER70S-6	POSITION	3G
WELDING PROCESS	GMAW	PLATE THICKNESS	1"
VISUAL INSPECTION			
FILLET WELD		GROOVE WELD	
PROFILE	N/A	PLATE GROOVE	Accepted
PENETRATION	N/A	APPEARANCE	Accepted
BEND TEST			
FILLET WELD		GROOVE WELD	
BEND TEST	N/A	FACE BEND	Accepted
ETCH TEST	N/A	ROOT BEND	Accepted
SATE	4/29/15	TECHNICIAN	Chris Meeks, CWI
RADIOGRAPHIC TEST TEST COUPON			
ACCEPTED	N/A	REJECTED	N/A
DATE	N/A	TECHNICIAN	N/A

(3G) Vertical position qualifies for flat and vertical positions of groove welding of plate and pipe (Over 24 in.) ; flat, horizontal, and vertical position of fillet welding of plate; and flat, horizontal and vertical position of pipe fillet welding.

AWS Christopher T Meeks CWI 02060881 QC1 EXP 6/1/2017

CLIENT PROCEDURE NO.: 14-003-G SIGNED: Chris Meeks

We, the undersigned, certify that the statements in this record are correct and that the test welds were prepared, welded, and tested in conformance with the requirements of Section 4 of AWS D1.1, *Structural Welding Code-Steel.*

Authorized By: Tonni Stanner Date: 5/5/2015

KUSTERS ZIMA

AMERICAN WELDING SOCIETY
WELDER QUALIFICATION TEST
D1.1/2010

CLIENT: **Kuster - Zima** DATE: June 2, 2015 JOB NO. 3626-14-003

WELDER NAME	Joel Toth	SS #	XXX-XX-1556
BASE METAL	A572 Grade 50	WELD SIZE	Fill Groove
FILLER MATERIAL	.035-ER70S-6	POSITION	3G
WELDING PROCESS	GMAW	PLATE THICKNESS	1"
VISUAL INSPECTION			
FILLET WELD		GROOVE WELD	
PROFILE	N/A	PLATE GROOVE	Accepted
PENETRATION	N/A	APPEARANCE	Accepted
BEND TEST			
FILLET WELD		GROOVE WELD	
BEND TEST	N/A	FACE BEND	Accepted
ETCH TEST	N/A	ROOT BEND	Accepted
SATE	6/2/15	TECHNICIAN	Chris Meeks, CWI
RADIOGRAPHIC TEST TEST COUPON			
ACCEPTED	N/A	REJECTED	N/A
DATE	N/A	TECHNICIAN	N/A

(3G) Vertical position qualifies for flat and vertical positions of groove welding of plate and pipe (Over 24 in.) ; flat, horizontal, and vertical position of fillet welding of plate; and flat, horizontal and vertical position of pipe fillet welding.

Christopher T Meeks
CWI 02000881
QC1 EXP. 6/1/2017

CLIENT PROCEDURE NO.: 14-003-G SIGNED: _____

We, the undersigned, certify that the statements in this record are correct and that the test welds were prepared, welded, and tested in conformance with the requirements of Section 4 of AWS D1.1, *Structural Welding Code-Steel.*

Authorized By: _____ Date: 6/2/2015

KUSTERS ZIMA

AMERICAN WELDING SOCIETY
WELDER QUALIFICATION TEST
D1.1/2010

CLIENT: **Kuster - Zima** DATE: May 5, 2015 JOB NO. 3626-14-003

WELDER NAME	Lance Rapalee	SS #	XXX-XX-6716
BASE METAL	A572 Grade 50	WELD SIZE	Fill Groove
FILLER MATERIAL	.035-ER70S-6	POSITION	3G
WELDING PROCESS	GMAW	PLATE THICKNESS	1"
VISUAL INSPECTION			
FILLET WELD		GROOVE WELD	
PROFILE	N/A	PLATE GROOVE	Accepted
PENETRATION	N/A	APPEARANCE	Accepted
BEND TEST			
FILLET WELD		GROOVE WELD	
BEND TEST	N/A	FACE BEND	Accepted
ETCH TEST	N/A	ROOT BEND	Accepted
SATE	4/29/15	TECHNICIAN	Chris Meeks, CWI
RADIOGRAPHIC TEST TEST COUPON			
ACCEPTED	N/A	REJECTED	N/A
DATE	N/A	TECHNICIAN	N/A

(3G) Vertical position qualifies for flat and vertical positions of groove welding of plate and pipe (Over 24 in.) ; flat, horizontal, and vertical position of fillet welding of plate; and flat, horizontal and vertical position of pipe fillet welding.

Christopher T Meeks
CWI 02060881
QC1 EXP 6/17/2017

CLIENT PROCEDURE NO.: 14-003-G SIGNED: Chris Meeks

We, the undersigned, certify that the statements in this record are correct and that the test welds were prepared, welded, and tested in conformance with the requirements of Section 4 of AWS D1.1, *Structural Welding Code-Steel.*

Authorized By: _____ Date: 5/5/2015

KUSTERS ZIMA

AMERICAN WELDING SOCIETY
WELDER QUALIFICATION TEST
D1.1/2010

CLIENT: **Kuster - Zima** DATE: May 5, 2015 JOB NO. 3626-14-003

WELDER NAME	Korey Kaylin	SS #	XXX-XX-5440
BASE METAL	A572 Grade 50	WELD SIZE	Fill Groove
FILLER MATERIAL	.035-ER70S-6	POSITION	3G
WELDING PROCESS	GMAW	PLATE THICKNESS	1"
VISUAL INSPECTION			
FILLET WELD		GROOVE WELD	
PROFILE	N/A	PLATE GROOVE	Accepted
PENETRATION	N/A	APPEARANCE	Accepted
BEND TEST			
FILLET WELD		GROOVE WELD	
BEND TEST	N/A	FACE BEND	Accepted
ETCH TEST	N/A	ROOT BEND	Accepted
SATE	4/29/15	TECHNICIAN	Chris Meeks, CWI
RADIOGRAPHIC TEST TEST COUPON			
ACCEPTED	N/A	REJECTED	N/A
DATE	N/A	TECHNICIAN	N/A

(3G) Vertical position qualifies for flat and vertical positions of groove welding of plate and pipe (Over 24 in.) ; flat, horizontal, and vertical position of fillet welding of plate; and flat, horizontal and vertical position of pipe fillet welding.

Christopher T Meeks
CWI 02060881
QC1 EXP. 6/1/2017

CLIENT PROCEDURE NO.: 14-003-G SIGNED: Chris Meeks

We, the undersigned, certify that the statements in this record are correct and that the test welds were prepared, welded, and tested in conformance with the requirements of Section 4 of AWS D1.1, *Structural Welding Code-Steel.*

Authorized By: Zima Date: 5/5/2015

S&ME

AMERICAN WELDING SOCIETY
WELDER QUALIFICATION TEST
D1.6/2007

CLIENT: **Kuster - Zima** DATE: October 6, 2014 JOB NO. 3626-14-003

WELDER NAME	David Hollifield	SS #	XXX-XX-2666
BASE METAL	316 / 316L	WELD SIZE	Fill Groove
FILLER MATERIAL	Inconal 625	POSITION	3G
WELDING PROCESS	GTAW	PLATE THICKNESS	1/2"
VISUAL INSPECTION			
FILLET WELD		GROOVE WELD	
PROFILE	N/A	PLATE GROOVE	Accepted
PENETRATION	N/A	APPEARANCE	Accepted
BEND TEST			
FILLET WELD		GROOVE WELD	
BEND TEST	N/A	FACE BEND	Accepted
ETCH TEST	N/A	ROOT BEND	Accepted
SATE	10/6/14	TECHNICIAN	Chris Meeks, CWI
RADIOGRAPHIC TEST TEST COUPON			
ACCEPTED	N/A	REJECTED	N/A
DATE	N/A	TECHNICIAN	N/A

(3G) Vertical position qualifies for flat and vertical positions of groove welding of plate and pipe (Over 24 in.) ; flat, horizontal, and vertical position of fillet welding of plate; and flat, horizontal and vertical position of pipe fillet welding.

Christopher T Meeks
CWI 02060881
QC1 EXP. 6/1/2017

CLIENT PROCEDURE NO.: GT-316L-625-CL SIGNED: Chris Meeks

We, the undersigned, certify that the statements in this record are correct and that the test welds were prepared, welded, and tested in conformance with the requirements of Section 4 of AWS D1.6, *Structural Welding Code-Steel.*

Authorized By: Tonnie Stamper Date: 10/6/2014

S&ME

AMERICAN WELDING SOCIETY
WELDER QUALIFICATION TEST
D1.6/2007

CLIENT: **Kuster - Zima** DATE: October 6, 2014 JOB NO. 3626-14-003

WELDER NAME	Robert Rapalee	SS #	XXX-XX-6716
BASE METAL	316 / 316L	WELD SIZE	Fill Groove
FILLER MATERIAL	Inconal 625	POSITION	3G
WELDING PROCESS	GTAW	PLATE THICKNESS	1/2"
VISUAL INSPECTION			
FILLET WELD		GROOVE WELD	
PROFILE	N/A	PLATE GROOVE	Accepted
PENETRATION	N/A	APPEARANCE	Accepted
BEND TEST			
FILLET WELD		GROOVE WELD	
BEND TEST	N/A	FACE BEND	Accepted
ETCH TEST	N/A	ROOT BEND	Accepted
SATE	10/6/14	TECHNICIAN	Chris Meeks, CWI
RADIOGRAPHIC TEST TEST COUPON			
ACCEPTED	N/A	REJECTED	N/A
DATE	N/A	TECHNICIAN	N/A

(3G) Vertical position qualifies for flat and vertical positions of groove welding of plate and pipe (Over 24 in.) ; flat, horizontal, and vertical position of fillet welding of plate; and flat, horizontal and vertical position of pipe fillet welding.

Christopher T Meeks
CWI 02060881
QC1 EXP. 6/1/2017

CLIENT PROCEDURE NO.: GT-316L-625-CL SIGNED: Chris Meeks

We, the undersigned, certify that the statements in this record are correct and that the test welds were prepared, welded, and tested in conformance with the requirements of Section 4 of AWS D1.6, *Structural Welding Code-Steel.*

Authorized By: Tommie Starner Date: 10/6/2014

S&ME

AMERICAN WELDING SOCIETY
WELDER QUALIFICATION TEST
D1.6/2007

CLIENT: **Kuster - Zima** DATE: October 6, 2014 JOB NO. 3626-14-003

WELDER NAME	Jeff Rapalee	SS #	XXX-XX-1405
BASE METAL	316 / 316L	WELD SIZE	Fill Groove
FILLER MATERIAL	Inconal 625	POSITION	3G
WELDING PROCESS	GTAW	PLATE THICKNESS	1/2"
VISUAL INSPECTION			
FILLET WELD		GROOVE WELD	
PROFILE	N/A	PLATE GROOVE	Accepted
PENETRATION	N/A	APPEARANCE	Accepted
BEND TEST			
FILLET WELD		GROOVE WELD	
BEND TEST	N/A	FACE BEND	Accepted
ETCH TEST	N/A	ROOT BEND	Accepted
SATE	10/6/14	TECHNICIAN	Chris Meeks, CWI
RADIOGRAPHIC TEST TEST COUPON			
ACCEPTED	N/A	REJECTED	N/A
DATE	N/A	TECHNICIAN	N/A

(3G) Vertical position qualifies for flat and vertical positions of groove welding of plate and pipe (Over 24 in.) ; flat, horizontal, and vertical position of fillet welding of plate; and flat, horizontal and vertical position of pipe fillet welding.

CLIENT PROCEDURE NO.: GT-316L-625-CL SIGNED: Chris Meeks

Christopher T Meeks
CWI 02060881
QC1 EXP. 6/1/2017

We, the undersigned, certify that the statements in this record are correct and that the test welds were prepared, welded, and tested in conformance with the requirements of Section 4 of AWS D1.6, *Structural Welding Code-Steel*.

Authorized By: Lonnie Starnes Date: 10/6/2014

S&ME

AMERICAN WELDING SOCIETY
WELDER QUALIFICATION TEST
D1.6/2007

CLIENT: **Kuster - Zima** DATE: October 6, 2014 JOB NO. 3626-14-003

WELDER NAME	Steve Salmon	SS #	XXX-XX-1217
BASE METAL	316 / 316L	WELD SIZE	Fill Groove
FILLER MATERIAL	Inconal 625	POSITION	3G
WELDING PROCESS	GTAW	PLATE THICKNESS	1/2"
VISUAL INSPECTION			
FILLET WELD		GROOVE WELD	
PROFILE	N/A	PLATE GROOVE	Accepted
PENETRATION	N/A	APPEARANCE	Accepted
BEND TEST			
FILLET WELD		GROOVE WELD	
BEND TEST	N/A	FACE BEND	Accepted
ETCH TEST	N/A	ROOT BEND	Accepted
SATE	10/6/14	TECHNICIAN	Chris Meeks, CWI
RADIOGRAPHIC TEST TEST COUPON			
ACCEPTED	N/A	REJECTED	N/A
DATE	N/A	TECHNICIAN	N/A

(3G) Vertical position qualifies for flat and vertical positions of groove welding of plate and pipe (Over 24 in.) ; flat, horizontal, and vertical position of fillet welding of plate; and flat, horizontal and vertical position of pipe fillet welding.

Christopher T Meeks
CWI 02060881
QC1 EXP. 6/1/2017

CLIENT PROCEDURE NO.: GT-316L-625-CL SIGNED: Chris Meeks

We, the undersigned, certify that the statements in this record are correct and that the test welds were prepared, welded, and tested in conformance with the requirements of Section 4 of AWS D1.6, *Structural Welding Code-Steel.*

Authorized By: Connie Stanner Date: 10/6/2014

S&ME

AMERICAN WELDING SOCIETY
WELDER QUALIFICATION TEST
D1.6/2007

CLIENT: **Kuster - Zima** DATE: October 6, 2014 JOB NO. 3626-14-003

WELDER NAME	Joel Toth	SS #	XXX-XX-1556
BASE METAL	316 / 316L	WELD SIZE	Fill Groove
FILLER MATERIAL	Inconal 625	POSITION	3G
WELDING PROCESS	GTAW	PLATE THICKNESS	1/2"
VISUAL INSPECTION			
FILLET WELD		GROOVE WELD	
PROFILE	N/A	PLATE GROOVE	Accepted
PENETRATION	N/A	APPEARANCE	Accepted
BEND TEST			
FILLET WELD		GROOVE WELD	
BEND TEST	N/A	FACE BEND	Accepted
ETCH TEST	N/A	ROOT BEND	Accepted
SATE	10/6/14	TECHNICIAN	Chris Meeks, CWI
RADIOGRAPHIC TEST TEST COUPON			
ACCEPTED	N/A	REJECTED	N/A
DATE	N/A	TECHNICIAN	N/A

(3G) Vertical position qualifies for flat and vertical positions of groove welding of plate and pipe (Over 24 in.) ; flat, horizontal, and vertical position of fillet welding of plate; and flat, horizontal and vertical position of pipe fillet welding.

Christopher T Meeks
CWI 02060881
QC1 EXP. 6/1/2017

CLIENT PROCEDURE NO.: GT-316L-625-CL SIGNED: _____

We, the undersigned, certify that the statements in this record are correct and that the test welds were prepared, welded, and tested in conformance with the requirements of Section 4 of AWS D1.6, *Structural Welding Code-Steel*.

Authorized By: Lonnie Storms Date: 10/6/2014

S&ME

AMERICAN WELDING SOCIETY
WELDER QUALIFICATION TEST
D1.6/2007

CLIENT: **Kuster - Zima** DATE: October 6, 2014 JOB NO. 3626-14-003

WELDER NAME	Lonnie Starnes	SS #	XXX-XX-3851
BASE METAL	316 / 316L	WELD SIZE	Fill Groove
FILLER MATERIAL	Inconal 625	POSITION	3G
WELDING PROCESS	GTAW	PLATE THICKNESS	1/2"
VISUAL INSPECTION			
FILLET WELD		GROOVE WELD	
PROFILE	N/A	PLATE GROOVE	Accepted
PENETRATION	N/A	APPEARANCE	Accepted
BEND TEST			
FILLET WELD		GROOVE WELD	
BEND TEST	N/A	FACE BEND	Accepted
ETCH TEST	N/A	ROOT BEND	Accepted
SATE	10/6/14	TECHNICIAN	Chris Meeks, CWI
RADIOGRAPHIC TEST TEST COUPON			
ACCEPTED	N/A	REJECTED	N/A
DATE	N/A	TECHNICIAN	N/A

(3G) Vertical position qualifies for flat and vertical positions of groove welding of plate and pipe (Over 24 in.) ; flat, horizontal, and vertical position of fillet welding of plate; and flat, horizontal and vertical position of pipe fillet welding.

Christopher T Meeks
CWI 02060881
QC1 EXP. 6/1/2017

CLIENT PROCEDURE NO.: GT-316L-625-CL SIGNED: Chris Meeks

We, the undersigned, certify that the statements in this record are correct and that the test welds were prepared, welded, and tested in conformance with the requirements of Section 4 of AWS D1.6, *Structural Welding Code-Steel*.

Authorized By: Lonnie Starnes Date: 10/6/2014

S&ME

AMERICAN WELDING SOCIETY
WELDER QUALIFICATION TEST
D1.6/2007

CLIENT: **Kuster - Zima** DATE: October 6, 2014 JOB NO. 3626-14-003

WELDER NAME	David Hollifield	SS #	XXX-XX-2666
BASE METAL	316 / 316L	WELD SIZE	Fill Groove
FILLER MATERIAL	Inconal 625	POSITION	3G
WELDING PROCESS	GTAW	PLATE THICKNESS	1/2"
VISUAL INSPECTION			
FILLET WELD		GROOVE WELD	
PROFILE	N/A	PLATE GROOVE	Accepted
PENETRATION	N/A	APPEARANCE	Accepted
BEND TEST			
FILLET WELD		GROOVE WELD	
BEND TEST	N/A	FACE BEND	Accepted
ETCH TEST	N/A	ROOT BEND	Accepted
SATE	10/6/14	TECHNICIAN	Chris Meeks, CWI
RADIOGRAPHIC TEST TEST COUPON			
ACCEPTED	N/A	REJECTED	N/A
DATE	N/A	TECHNICIAN	N/A

(3G) Vertical position qualifies for flat and vertical positions of groove welding of plate and pipe (Over 24 in.) ; flat, horizontal, and vertical position of fillet welding of plate; and flat, horizontal and vertical position of pipe fillet welding.

Christopher T Meeks
CWI 02060881
QC1 EXP. 6/1/2017

CLIENT PROCEDURE NO.: GT-316L-625-CL SIGNED: Chris Meeks

We, the undersigned, certify that the statements in this record are correct and that the test welds were prepared, welded, and tested in conformance with the requirements of Section 4 of AWS D1.6, *Structural Welding Code-Steel.*

Authorized By: Connie Stanner Date: 10/6/2014

S&ME

AMERICAN WELDING SOCIETY
WELDER QUALIFICATION TEST
D1.6/2007

CLIENT: **Kuster - Zima** DATE: October 6, 2014 JOB NO. 3626-14-003

WELDER NAME	Robert Rapalee	SS #	XXX-XX-6716
BASE METAL	316 / 316L	WELD SIZE	Fill Groove
FILLER MATERIAL	Inconal 625	POSITION	3G
WELDING PROCESS	GTAW	PLATE THICKNESS	1/2"
VISUAL INSPECTION			
FILLET WELD		GROOVE WELD	
PROFILE	N/A	PLATE GROOVE	Accepted
PENETRATION	N/A	APPEARANCE	Accepted
BEND TEST			
FILLET WELD		GROOVE WELD	
BEND TEST	N/A	FACE BEND	Accepted
ETCH TEST	N/A	ROOT BEND	Accepted
SATE	10/6/14	TECHNICIAN	Chris Meeks, CWI
RADIOGRAPHIC TEST TEST COUPON			
ACCEPTED	N/A	REJECTED	N/A
DATE	N/A	TECHNICIAN	N/A

(3G) Vertical position qualifies for flat and vertical positions of groove welding of plate and pipe (Over 24 in.) ; flat, horizontal, and vertical position of fillet welding of plate; and flat, horizontal and vertical position of pipe fillet welding.

Christopher T Meeks
CWI 02060881
QC1 EXP. 6/1/2017

CLIENT PROCEDURE NO.: GT-316L-625-CL SIGNED: Chris Meeks

We, the undersigned, certify that the statements in this record are correct and that the test welds were prepared, welded, and tested in conformance with the requirements of Section 4 of AWS D1.6, *Structural Welding Code-Steel.*

Authorized By: Lonnie Stamer Date: 10/6/2014

S&ME

AMERICAN WELDING SOCIETY
WELDER QUALIFICATION TEST
D1.6/2007

CLIENT: **Kuster - Zima** DATE: October 6, 2014 JOB NO. 3626-14-003

WELDER NAME	Jeff Rapalee	SS #	XXX-XX-1405
BASE METAL	316 / 316L	WELD SIZE	Fill Groove
FILLER MATERIAL	Inconal 625	POSITION	3G
WELDING PROCESS	GTAW	PLATE THICKNESS	1/2"
VISUAL INSPECTION			
FILLET WELD		GROOVE WELD	
PROFILE	N/A	PLATE GROOVE	Accepted
PENETRATION	N/A	APPEARANCE	Accepted
BEND TEST			
FILLET WELD		GROOVE WELD	
BEND TEST	N/A	FACE BEND	Accepted
ETCH TEST	N/A	ROOT BEND	Accepted
SATE	10/6/14	TECHNICIAN	Chris Meeks, CWI
RADIOGRAPHIC TEST TEST COUPON			
ACCEPTED	N/A	REJECTED	N/A
DATE	N/A	TECHNICIAN	N/A

(3G) Vertical position qualifies for flat and vertical positions of groove welding of plate and pipe (Over 24 in.) ; flat, horizontal, and vertical position of fillet welding of plate; and flat, horizontal and vertical position of pipe fillet welding.

CLIENT PROCEDURE NO.: GT-316L-625-CL SIGNED: Chris Meeks

Christopher T Meeks
CWI 02060881
QC1 EXP. 6/1/2017

We, the undersigned, certify that the statements in this record are correct and that the test welds were prepared, welded, and tested in conformance with the requirements of Section 4 of AWS D1.6, *Structural Welding Code-Steel.*

Authorized By: Lonnie Starnes Date: 10/6/2014

S&ME

AMERICAN WELDING SOCIETY
WELDER QUALIFICATION TEST
D1.6/2007

CLIENT: **Kuster - Zima** DATE: October 6, 2014 JOB NO. 3626-14-003

WELDER NAME	Steve Salmon	SS #	XXX-XX-1217
BASE METAL	316 / 316L	WELD SIZE	Fill Groove
FILLER MATERIAL	Inconal 625	POSITION	3G
WELDING PROCESS	GTAW	PLATE THICKNESS	1/2"
VISUAL INSPECTION			
FILLET WELD		GROOVE WELD	
PROFILE	N/A	PLATE GROOVE	Accepted
PENETRATION	N/A	APPEARANCE	Accepted
BEND TEST			
FILLET WELD		GROOVE WELD	
BEND TEST	N/A	FACE BEND	Accepted
ETCH TEST	N/A	ROOT BEND	Accepted
SATE	10/6/14	TECHNICIAN	Chris Meeks, CWI
RADIOGRAPHIC TEST TEST COUPON			
ACCEPTED	N/A	REJECTED	N/A
DATE	N/A	TECHNICIAN	N/A

(3G) Vertical position qualifies for flat and vertical positions of groove welding of plate and pipe (Over 24 in.) ; flat, horizontal, and vertical position of fillet welding of plate; and flat, horizontal and vertical position of pipe fillet welding.

Christopher T Meeks
CWI 02060891
QC1 EXP. 6/1/2017

CLIENT PROCEDURE NO.: GT-316L-625-CL SIGNED: Chris Meeks

We, the undersigned, certify that the statements in this record are correct and that the test welds were prepared, welded, and tested in conformance with the requirements of Section 4 of AWS D1.6, *Structural Welding Code-Steel.*

Authorized By: Connie Stanner Date: 10/6/2014

S&ME

AMERICAN WELDING SOCIETY
WELDER QUALIFICATION TEST
D1.6/2007

CLIENT: **Kuster - Zima** DATE: October 6, 2014 JOB NO. 3626-14-003

WELDER NAME	Joel Toth	SS #	XXX-XX-1556
BASE METAL	316 / 316L	WELD SIZE	Fill Groove
FILLER MATERIAL	Inconal 625	POSITION	3G
WELDING PROCESS	GTAW	PLATE THICKNESS	1/2"
VISUAL INSPECTION			
FILLET WELD		GROOVE WELD	
PROFILE	N/A	PLATE GROOVE	Accepted
PENETRATION	N/A	APPEARANCE	Accepted
BEND TEST			
FILLET WELD		GROOVE WELD	
BEND TEST	N/A	FACE BEND	Accepted
ETCH TEST	N/A	ROOT BEND	Accepted
SATE	10/6/14	TECHNICIAN	Chris Meeks, CWI
RADIOGRAPHIC TEST TEST COUPON			
ACCEPTED	N/A	REJECTED	N/A
DATE	N/A	TECHNICIAN	N/A

(3G) Vertical position qualifies for flat and vertical positions of groove welding of plate and pipe (Over 24 in.) ; flat, horizontal, and vertical position of fillet welding of plate; and flat, horizontal and vertical position of pipe fillet welding.

Christopher T Meeks
CWI 02060881
QC1 EXP. 6/1/2017

CLIENT PROCEDURE NO.: GT-316L-625-CL SIGNED: _____

We, the undersigned, certify that the statements in this record are correct and that the test welds were prepared, welded, and tested in conformance with the requirements of Section 4 of AWS D1.6, *Structural Welding Code-Steel.*

Authorized By: Lonnie Stearns Date: 10/6/2014

S&ME

AMERICAN WELDING SOCIETY
WELDER QUALIFICATION TEST
D1.6/2007

CLIENT: **Kuster - Zima** DATE: October 6, 2014 JOB NO. 3626-14-003

WELDER NAME	Lonnie Starnes	SS #	XXX-XX-3851
BASE METAL	316 / 316L	WELD SIZE	Fill Groove
FILLER MATERIAL	Inconal 625	POSITION	3G
WELDING PROCESS	GTAW	PLATE THICKNESS	1/2"
VISUAL INSPECTION			
FILLET WELD		GROOVE WELD	
PROFILE	N/A	PLATE GROOVE	Accepted
PENETRATION	N/A	APPEARANCE	Accepted
BEND TEST			
FILLET WELD		GROOVE WELD	
BEND TEST	N/A	FACE BEND	Accepted
ETCH TEST	N/A	ROOT BEND	Accepted
SATE	10/6/14	TECHNICIAN	Chris Meeks, CWI
RADIOGRAPHIC TEST TEST COUPON			
ACCEPTED	N/A	REJECTED	N/A
DATE	N/A	TECHNICIAN	N/A

(3G) Vertical position qualifies for flat and vertical positions of groove welding of plate and pipe (Over 24 in.) ; flat, horizontal, and vertical position of fillet welding of plate; and flat, horizontal and vertical position of pipe fillet welding.

CLIENT PROCEDURE NO.: GT-316L-625-CL SIGNED: Chris Meeks

Christopher T Meeks
CWI 02060881
QC1 EXP. 6/1/2017

We, the undersigned, certify that the statements in this record are correct and that the test welds were prepared, welded, and tested in conformance with the requirements of Section 4 of AWS D1.6, *Structural Welding Code-Steel.*

Authorized By: Lonnie Starnes Date: 10/6/2014

S&ME

AMERICAN WELDING SOCIETY
WELDER QUALIFICATION TEST
D1.6/2007

CLIENT: **Kuster - Zima** DATE: October 6, 2014 JOB NO. 3626-14-003

WELDER NAME	Lonnie Starnes	SS #	XXX-XX-3851
BASE METAL	316 / 316L	WELD SIZE	Fill Groove
FILLER MATERIAL	Inconal 625	POSITION	3G
WELDING PROCESS	GTAW	PLATE THICKNESS	1/2"
VISUAL INSPECTION			
FILLET WELD		GROOVE WELD	
PROFILE	N/A	PLATE GROOVE	Accepted
PENETRATION	N/A	APPEARANCE	Accepted
BEND TEST			
FILLET WELD		GROOVE WELD	
BEND TEST	N/A	FACE BEND	Accepted
ETCH TEST	N/A	ROOT BEND	Accepted
SATE	10/6/14	TECHNICIAN	Chris Meeks, CWI
RADIOGRAPHIC TEST TEST COUPON			
ACCEPTED	N/A	REJECTED	N/A
DATE	N/A	TECHNICIAN	N/A

(3G) Vertical position qualifies for flat and vertical positions of groove welding of plate and pipe (Over 24 in.) ; flat, horizontal, and vertical position of fillet welding of plate; and flat, horizontal and vertical position of pipe fillet welding.

Christopher T Meeks
CWI 02060881
QC1 EXP. 6/1/2017

CLIENT PROCEDURE NO.: GT-316L-625-CL SIGNED: Chris Meeks

We, the undersigned, certify that the statements in this record are correct and that the test welds were prepared, welded, and tested in conformance with the requirements of Section 4 of AWS D1.6, *Structural Welding Code-Steel.*

Authorized By: Lonnie Starnes Date: 10/6/2014

zima
Jagenberg Group
Manufacture.Quality.Solutions.
Kusters Water Division

1.6 – WARRANTY

zima
Jagenberg Group
Manufacture.Quality.Solutions.
Kusters Water Division

LIMITED ONE YEAR EQUIPMENT WARRANTY

This Limited One Year Equipment Warranty ("Limited Warranty") is part of the proposal to which it is attached. Any agreement between Kusters Water and the Purchaser for the purchase of the equipment described therein ("Equipment") shall be subject to, and shall include, the terms and provisions hereof.

1. Limited Warranty. Kusters Water warrants that for a period of one (1) year from the date of initial start-up or eighteen (18) months after shipment, whichever shall occur first, the Equipment will materially conform to the sales materials provided by Kusters Water to Purchaser.

2. Warranty Claims Process. Kusters Water shall either replace or repair a defect in Equipment in accordance with the terms herein, provided that: (a) Purchaser promptly notifies Kusters Water of the defect by sending the Warranty Claim Form to the address provided therein;(b) Examination of the Equipment at Purchaser's expense or the information provided in Purchaser's Warranty Claim Form has indicated a defect in the Equipment that is covered by the terms of this Limited Warranty; (c) Purchaser has cooperated fully with Kusters Water's treatment of warranty claim; (d) Purchaser has paid all accrued fees owed to Kusters Water; and (e) Purchaser shall be responsible for all cost associated with labor to repair or replace part(s).

3. WARRANTY LIMITATION. THE FOREGOING LIMITED WARRANTY IS IN LIEU OF ALL OTHER WARRANTIES OR OBLIGATIONS AND KUSTERS WATER HEREBY DISCLAIMS ALL OTHER REPRESENTATIONS AND WARRANTIES, WHETHER EXPRESS OR IMPLIED, INCLUDING, WITHOUT LIMITATION, IMPLIED WARRANTIES OF MERCHANTABILITY AND/OR FITNESS FOR USE AND/OR A PARTICULAR PURPOSE. The limited warranty set forth herein shall not apply to, and Kusters Water shall not have any liability to Purchaser with regard to: (a) any Equipment that has been altered or repaired without the express written authority of Kusters Water; (b) any Equipment that has been improperly installed, operated, modified, repaired or maintained; (c) any Equipment which has been subjected to abnormal stress, misuse, negligence or accident; and (d) any Equipment damaged by shipment, ordinary wear and tear, corrosion or weathering. Kusters Water's obligation under this Limited Warranty is expressly and exclusively limited to replacing or repairing Equipment, which Kusters Water's examination has shown to be defective.

4. Limitations on Liability. Kusters Water shall not be liable, under any circumstances, for special, indirect, incidental, punitive or consequential damages of any nature whatsoever, including, without limitation, any lost revenues or profits of Purchaser, whether or not Kusters Water has been advised of the possibility of such damages or such damages were reasonably foreseeable. Kusters Water's sole liability for damages shall not exceed, under any circumstances, any amounts paid by Purchaser for the Equipment.

zima
Jagenberg Group
Manufacture.Quality.Solutions.
Kusters Water Division

1.7 – MATERIALS OF CONSTRUCTION & STORAGE

zima
Jagenberg Group
Manufacture.Quality.Solutions.
Kusters Water Division

MATERIAL OF CONSTRUCTION
NATIONAL STANDARDS

Unless specifically noted otherwise, as a minimum the Kusters Water equipment will be designed and manufactured in accordance with the following Standards:

A. American Society for Testing and Materials (ASTM):

a. ASTM A36 – Standard Specification for Carbon Structural Steel
b. ASTM A48 – Standard Specification for Gray Iron Castings
c. ASTM A120 – Standard Specification for Pipe, Steel, Black and Hot-Dipped Zinc Coated (Galvanized) Welded and Seamless, for Ordinary uses.
d. ASTM A123 – Standard Specifications for Zinc (Hot Dip Galvanized) Coatings on Iron and Steel Products
e. ASTM A269 – Seamless and Welded Austenitic Stainless-Steel tubing for General Service.
f. ASTM A312 – Specification for Seamless and Welded Austenitic Stainless-Steel Pipe.
g. ASTM A240 – Specification for Heat Resisting Chromium-Nickel Stainless Steel Plate, Sheet and Strip for Pressure Vessels.
h. ASTM A242 – Specification for Alloy Steel.
i. ASTM A380 – Standard Practice for Cleaning, Descaling, and Passivation of Stainless Steel Parts, Equipment, and Systems.
j. ASTM A380 – Specification for General Requirements for Specialized Carbon and Alloy Steel Pipe.
k. ASTM A774 – Specification for As-Welded Wrought Austenitic Stainless-Steel Fittings for General Corrosive Service at Low and Moderate Temperatures.
l. ASTM A778 – Specification for Welded, Unannealed Austenitic Stainless-Steel Tubular Products.
m. ASTM A325 – Standard Specifications for Structural Bolts, Heat Treated, 120/105 ksi Minimum Tensile Strength

B. American National Standards Institute (ANSI)

a. ANSI B1.1 – Unified Inch Screw Threads (UN and UNR Thread Form)
b. ANSI B16.1 – Cast Iron Pipe Flanges and Flanged Fittings
c. ANSI B.15 – Load Ratings and Fatigue Life for Ball Bearings
d. ANSI 3.16 – Load Ratings and Fatigue Life for Roller Bearings

C. Society for Protective Coatings (SSPC)

a. SSPC SP10 – Near White Blast Cleaning
b. SSPC SP7 – Brush-Off Blast Cleaning

D. National Electric Manufacturers Association (NEMA)

a. NEMA MG1 – Motors and Generators

E. American Welding Society (AWS)
F. American Gear Manufacturers Association (AGMA)
G. American Iron and Steel Institute (AISI)
H. Anti-Friction Bearing Manufacturers Association (ABMA)
I. Hydraulic Institute (HI)

MATERIAL OF CONSTRUCTION
NATIONAL STANDARDS (Cont'd)

Unless specifically noted otherwise, as a minimum the Kusters Water equipment will be designed and manufactured in accordance with the following Standards:

J. Structural Steel Painting Council (SSPC)
K. National Fire Protection Association (NFPA)
L. Occupational Safety and Health Administration (OSHA

zima
Jagenberg Group

Manufacture.Quality.Solutions.

Kusters Water Division

SECTION TWO

THICKENER DATA

zima
Jagenberg Group
Manufacture.Quality.Solutions.
Kusters Water Division

2.1 – SCOPE OF SUPPLY

zima
Jagenberg Group
Manufacture.Quality.Solutions.
Kusters Water Division

SCOPE OF SUPPLY

No.	Q'ty	Description
1	1 ea	Access Bridge (3'-0" Wide Beam Style) w/ 1 1/4" Aluminum Grating
1a	1ea	Service Platform (24" Clear) w/ 1/4" Aluminum Checkered Plate
1b	1 ea	Access Bridge / Service Platform Handrail – 2-Rail Mechanical Aluminum
1c	1 ea	Clarifier Drive Unit w/ Overload Protection
1d	1 ea	Influent Column – 18" Diameter x 1/4"
1e	1 ea	Influent Well – 9'-0" Diameter x 5'-0" Deep x 1/4"
1f	1.ea	Truss Arm Drive Cage – 3'-1" Square
1g	2 ea	Two Sludge Scraper Truss Arms w/ Thickening Pickets and Stainless Steel Squeegees
1h	1 ea	Two (2) Surface Skimmer Assemblies – Full Radius
1i	1 ea	Surface Scum Trough – 6'-0" w/ Auto-Flush valve
1j	LOT	Fiberglass Launder Trough – 12" Wide x 18" Deep w/ FRP Support Brackets Fiberglass Weir Plates – 1/4" x 9" Fiberglass Baffle Plates – 1/4" x 12" w/ FRP Support Brackets Weir Plate and Launder Trough Neoprene Gaskets
1k	LOT	Anchor Bolts – 316 Stainless Steel
1l	LOT	Assembly Hardware – 316 Stainless Steel
1m	1 ea	Control Panels

zima
Jagenberg Group
Manufacture.Quality.Solutions.
Kusters Water Division

2.2 – DESIGN DATA

zima
Jagenberg Group
Manufacture.Quality.Solutions.
Kusters Water Division

WOONSOCKET, RI - GRAVITY THICKENER MECHANISM

DESIGN DATA SUMMARY

Thickener Mechanism:	HBST Half Bridge Sludge Thickener
Tank/Thickener Quantity:	1
Tank Diameter:	60’ – 0”
Tank Elevations	*(Please see layout drawings in submittal Chapter 3)*
Drive Manufacturer:	Kusters
Drive Model:	3035-H
Design Running Torque:	36,000 ft-lbs
Rotational Speed:	8 fpm
Influent Solids Concentration:	10%

zima
Jagenberg Group
Manufacture.Quality.Solutions.
Kusters Water Division

2.3 – SPARE PARTS

zima
Jagenberg Group
Manufacture.Quality.Solutions.
Kusters Water Division

SPARE PARTS / SPECIAL TOOLS

SPARE PARTS:

The Following Spare Parts are Included:

One (1) Set of Rake Arm Squeegees
One (1) Set of Hydraulic Hoses
One (1) Skimmer Neoprene Wiper
Two (2) Hydraulic Filters

One (1) Set of gaskets, seals, and sealing strips

For Spare Parts Please Contact:

Tonya Robinson
Aftermarket Parts Manager
Kusters Water
A Division of Zima Corporation

Ph: (864) 576-0660 Extension 1203

Tonya.Robinson@Zimacorp.com

SPECIAL TOOLS:

There are no special tools required for the maintenance and operation of the Kusters Water equipment. Basic Imperial and metric hand tools are required.

zima
Jagenberg Group
Manufacture.Quality.Solutions.
Kusters Water Division

2.4 – CENTER DRIVE MECHANISM

zima
Jagenberg Group
Manufacture.Quality.Solutions.
Kusters Water Division

WOONSOCKET, RI - GRAVITY THICKENER MECHANISM

CENTER DRIVE MECHANISM

The center drive mechanism will be completely factory assembled consisting of an electrical motor, primary hydraulic reducer, an intermediate planetary reducer and a final gear set consisting of a spur pinion and internal tooth spur gear. All gear housings will be constructed with proper wall thicknesses to resist full drive peak loads without deflection.

The drive mechanism will be designed in accordance with ANSI/AGMA standards.

CENTER DRIVE MECHANISM	
Drive Unit Torque and Speed:	
Design Running Torque, (ft-lbs):	**36,000**
Alarm Torque, (ft-lbs):	36,000
Motor Cut-off Torque, (ft-lbs):	46,800
Relief Torque, (ft-lbs):	54,000
Rake Arm Tip Speed, (fpm):	8
Drive RPM:	0.042
General:	
Standards:	AGMA 2001-D04
Drive Model:	3035H
Main Bearing Design Life (B10):	>200,000 hrs.
Lubrication Type:	Oil
Primary Reducer	
Type:	Hydraulic
Accessories Included:	Pressure Relief Valve, 4-20mA port, 2 Pressure switches, hydraulic motor, hydraulic pump, hydraulic manifold, hydraulic hoses, hydraulic torque gauge, hydraulic filter, hydraulic filter gauge.

zima
Jagenberg Group
Manufacture.Quality.Solutions.
Kusters Water Division

CENTER DRIVE MECHANISM

Intermediate Reducer	
Type:	Planetary
Lubrication Type:	Oil
Gear Housing Material:	Cast Iron
Gear Material:	Hardened Steel
Turntable Bearing:	
Bearing Type:	Precision
Ball Race Diameter	35"
Turntable Housing:	
Material:	A-36 Steel

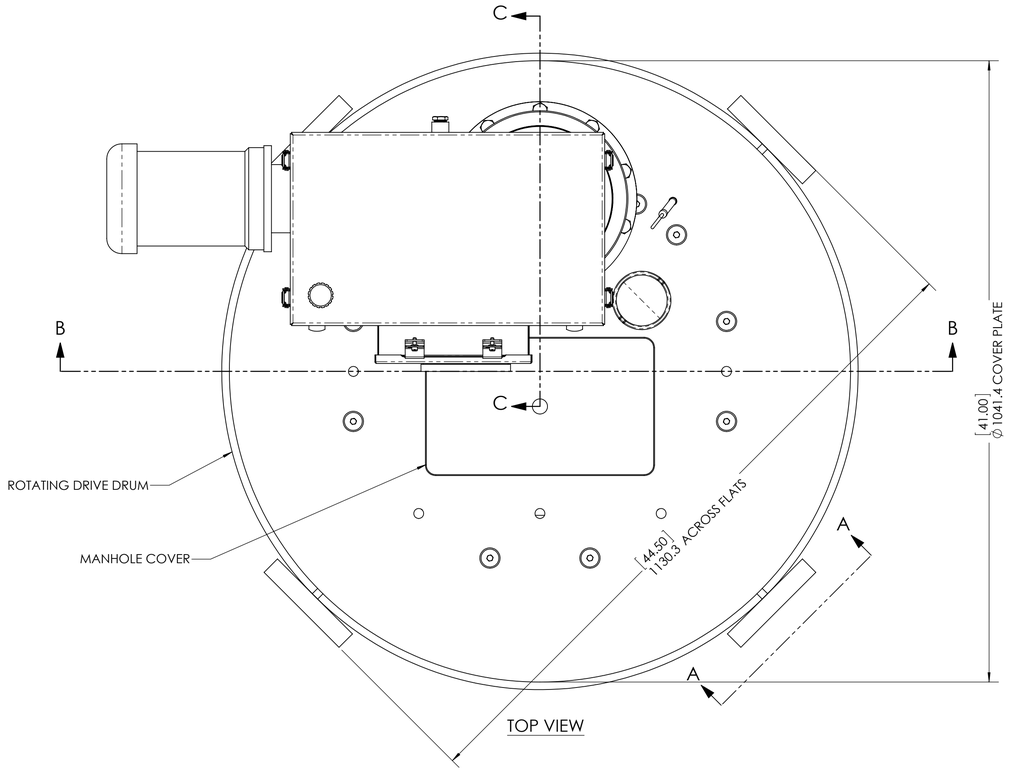

TOP VIEW

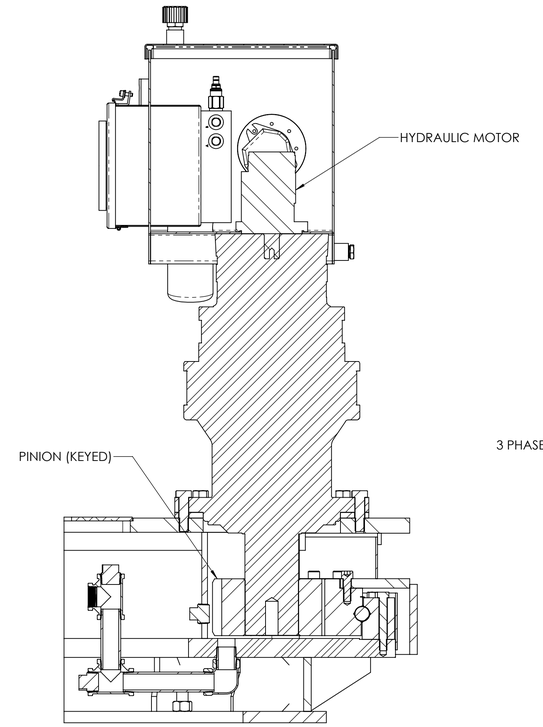

SECTION C-C

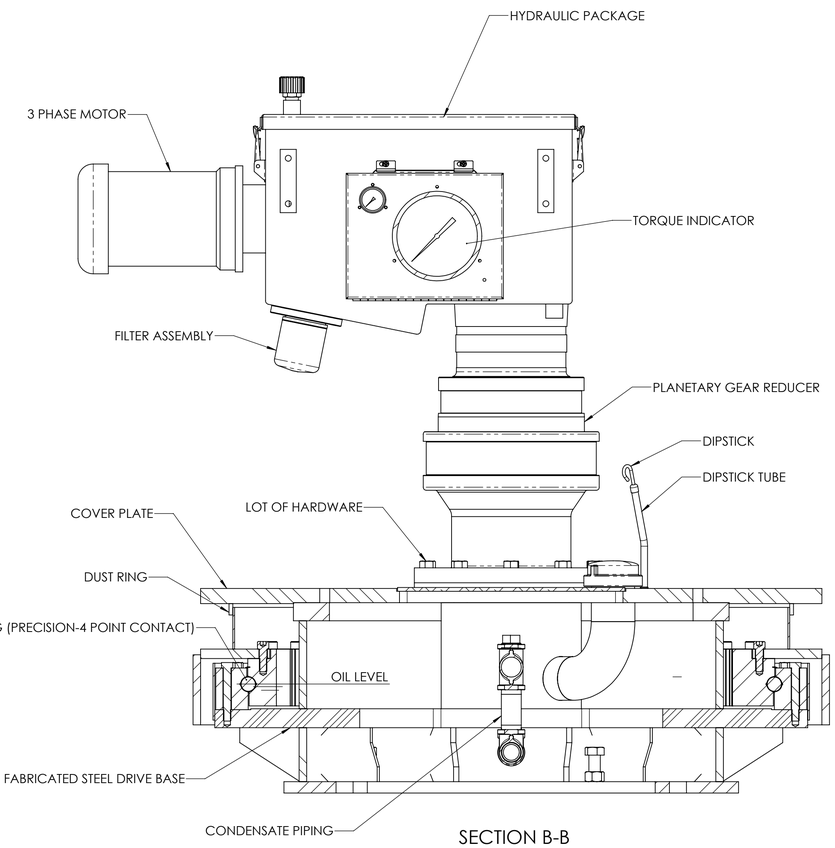

SECTION B-B

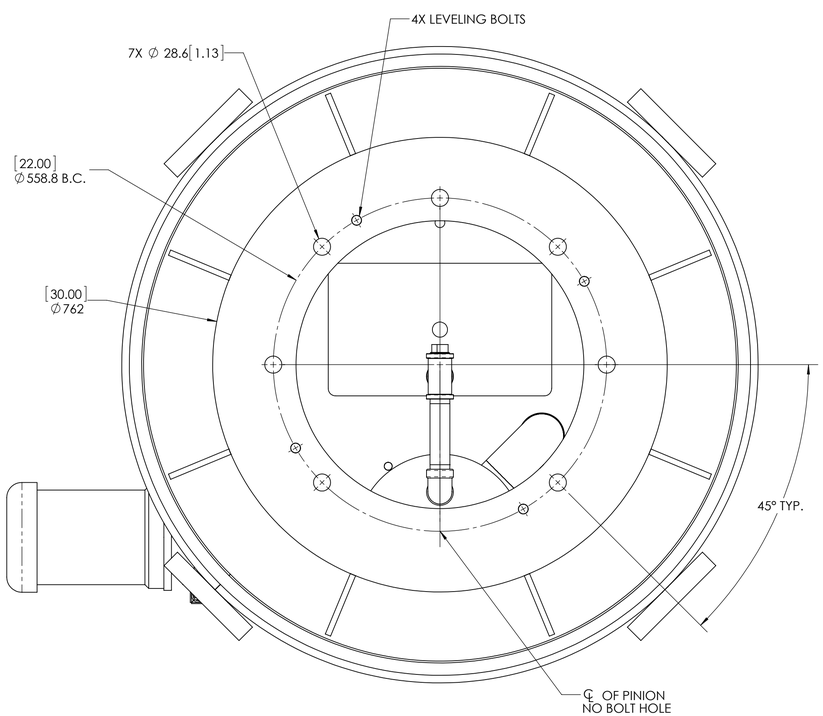

BOTTOM VIEW

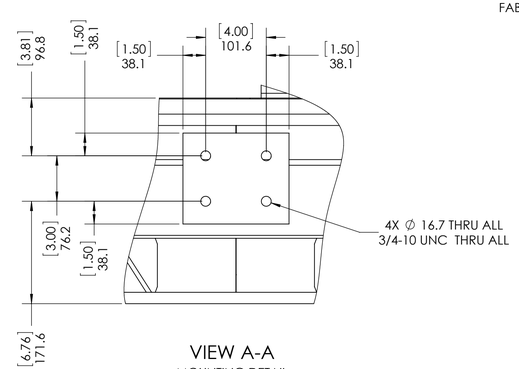

VIEW A-A
MOUNTING DETAIL

PROPRIETARY DOCUMENT:
This document, the information which it contains, and the know-how depicted are the property of KUSTERS ZIMA Corporation and may not be used in any manner detrimental to the Corporation's interest. Reproduction in whole or in part may not be made without written permission from KUSTERS ZIMA Corporation; and if made, shall bear or refer to this notice.

UNLESS OTHERWISE SPECIFIED
DIMENSIONS ARE IN MM
TOLERANCES:
FRACTIONAL ± 1/16"
ANGULAR: MACH ± 0.1°
ANGULAR: BEND ± 1°
1 PLACE DECIMAL ± 0.8 MM
2 PLACE DECIMAL ± 0.25 MM

KUSTERS ZIMA CORPORATION
Spartanburg SC USA

TITLE G.A. - PRECISION BEARING W/ HYDRAULIC PRIMARY 3035-H

SCALE 1:5	WEIGHT: 2244.74 LBS. (EST)	SHEET 1 OF 1	MODEL NO. 788375	PARENT DRAWING xxx
DRAWN MDB	CHECKED	DATE 7/8/2013	SIZE D	DWG. NO. 3035-H	REV 0

zima
Jagenberg Group

Manufacture.Quality.Solutions.

Kusters Water Division

DRIVE MOTOR DATA

MAX-E1® FAMILY

AEHH8N, NEMA PREMIUM (1 HP - 500 HP) [EP]
AEHE, HIGH EFFICIENCY [E]
AEHH8NCF, NEMA PREMIUM, FOOTED C-FACE (1 HP - 300 HP) [EP_C]
AEUH8NDC, NEMA PREMIUM, ROUND BODY C-FACE (1 HP - 100 HP) [EPV_C]

Effective 07-08-18
Supercedes 03-24-17

APPLICATIONS:

- Fans & Blowers
- Pumps
- Crushers
- Compressors
- Mixers
- Conveyors
- Any Severe Duty/ Petro-Chem/ Pulp & Paper Application

FEATURES:

- Output Range: 3/4 - 800 HP
- Speed: 3600, 1800, 1200 & 900 RPM
- Enclosure: Totally Enclosed Fan Cooled (IP54 for 280 Frames and below, IP55 for 280TS Frames and above)
- Voltage: 230/460V (Usable on 208V); 150HP and Larger is 460V Only(1,2)
- Three Phase, 60 Hz, 1.15 Service Factor (Continuous); 50 Hz, 1.0 Service Factor (Continuous)
- CSA Certified for Class I, Div. 2, Groups B, C, D - Temp Code T3 Minimum(7,8)
- CSA Certified for Class II, Div. 2, Groups F & G - Temp Code T3 Minimum(7,8,12) (444T and Above)
- Class F Insulation
- Class B Temperature Rise
- NEMA Design B Torques as a Minimum; Various Ratings also Meet Design C
- Cast Iron Frame, End Brackets & Fan Cover and Main Conduit Box(9)
- Grounding Terminal Inside Main Conduit Box
- Oversized Main Conduit Box Rotatable in 90 Degree Increments - F1 Mounted
- Designed for 40˚C Ambient Temperature(3)
- Designed for 3300 ft. Elevation(4)
- Bi-Directional Rotation; Except 2 Pole "Hybrid" and F# 5000 and Larger Ratings are Counter-Clockwise facing the DE
- 1045 Carbon Steel Shaft
- Aluminum Die Cast Squirrel Cage Rotor Construction for F# 140T - 449T
  Copper/Copper Alloy Rotor Construction for F# 5000 and Larger(10)
- Paint System: Phenolic Rust Proof Base Plus Polyurethane Top Coat
- Paint Color: Light Gray - Munsell N5.0
- Double Shielded Bearings Pre-Packed with MULTEMP SRL for F# 140T - 280T (Non-regreasable)
- High Quality Ball (or Roller) Bearings Regreasable with Mobil Polyrex™ EM for F# 280TS and Larger
- Automatic Grease Discharge Fittings on Regreasable Models
- Labyrinth Type Metal Flinger on Both Ends for F# 280TS and Larger
- Cast Iron Inner and Outer Bearing Caps for F#280TS and Larger
- Stainless Steel Nameplate
- New Dual Column Design Nameplate as Standard (60/50 Hz)
- Suitable for Inverter Use per NEMA MG-1 Part 31.4.4.2(5,6,11)
- Inverter Duty Speed Range: 20:1 Variable Torque, 10:1 Constant Torque (350 HP and Larger are 3:1 Constant Torque)(11)
- 9 Leads for 5 HP and Smaller;
- 12 Leads for 7.5 HP to 125 HP;
- 6 Leads for 150 HP and Larger
- Motors are U.L. Recognized, CSA Approved, CE Marked. ABS Design Assessment from 250 HP-800 HP(11)
- Dual Drilled Feet Available on Most Ratings - Longer Frames (i.e. 145T Drilled also for 143T)
- 2-Pole Motors 600 HP and Larger are Form Wound and Insulated Non-Drive End Bearing
- Rubber Dust Flinger on Drive-End for F# 140T - 280T
- Catalog Numbers Ending in "R" Come Standard with Roller Bearings for Belted Applications.

EXTRAS/ OPTIONS:

Please refer to pages 147 - 154 for common modifications that can be performed.

Notes:

(1) TWMC carries minimal MAX-E1® 575V stock; please check availability to ensure required motors are available. Ratings may be available from our Canadian warehouses at a higher price or from our factory with a longer lead time. Pricing and lead time may vary.
(2) Motors 7.5 HP & up are Suitable for Wye/Delta Starting.
(3) Consult a Stock Product Application Specialist for suitability in higher ambient environments.
(4) Consult a Stock Product Application Specialist for suitability at higher elevations.
(5) Motor service factor is 1.0 when operated on a VFD.
(6) Precautions should be taken to eliminate or reduce shaft currents that may be imposed on the motor by the VFD as stated per NEMA MG-1. Part 31.
(7) Catalog# EP3502, EP3504, EP4002T & EP4004T are "Hybrid" ratings; Not CSA Certified (Self-Certify Only) for hazardous locations, and not dual drilled.
(8) Catalog# EP3006 also not CSA Certified for Hazardous Locations (Self-Certify Only).
(9) F# 5000 and with Larger with Pressed Steel Plate Main Conduit Box.
(10) F# 5007 - 5011 8 Pole Ratings are Aluminum Die Cast Squirrel Cage Rotor Construction.
(11) EP4002T & EP4004T are hybrid frames and not VFD suitable.
(12) Various temp codes apply to ratings. Consult a product specialist for accurate code.

DATE JAN. 4, 2007	OUTLINE DIMENSIONS	MOTOR TYPE: AEUH8NDC
CAT. #: EPV1/54C	3-PHASE INDUCTION MOTOR	FRAME NO. 145TC

Pole	HP	kW	Hz	VOLT	Syn. Speed r/min(rpm)
4	1.5	1.1	60	230/460	1800

Ins	Rating	Dimension in	Approx Weight	Bearings
F	CONT.	inches	66 LBS	DE: 6205ZZ NDE: 6205ZZ

Totally Enclosed Fan-Cooled Vertical Type. Squirrel-Cage Rotor.

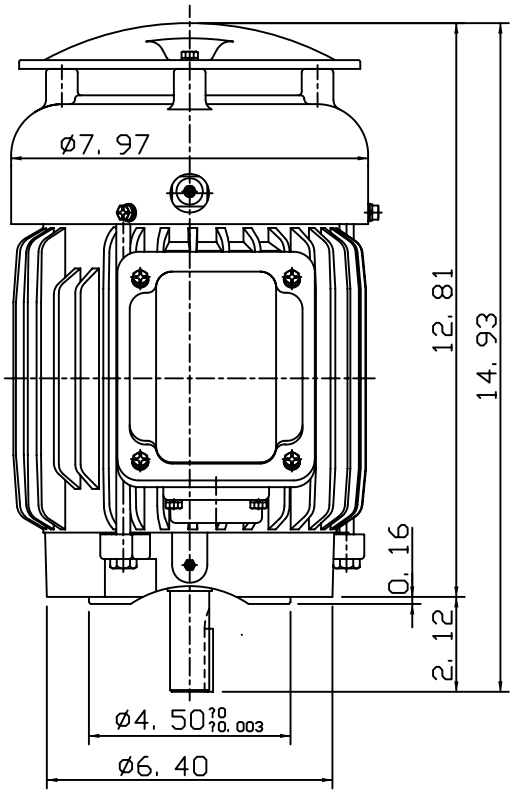

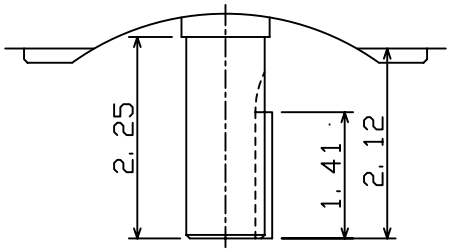

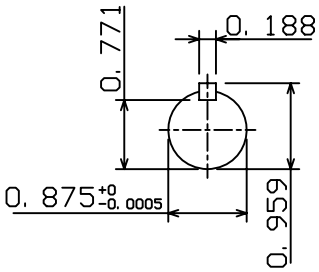

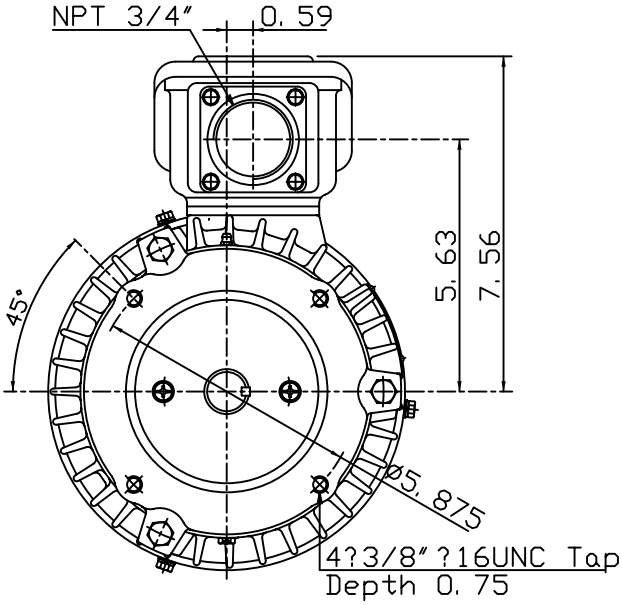

0			

DWN.	J. H. LIANG	12-23-06	TECO Westinghouse	DWG NO.
CHKD.	H. C. YAN	12-28-06		31049M990060
APPD.	M. C. TSAI	12-28-06		

TECO Westinghouse

ISSUED	PERFORMANCE DATA	ENCLOSURE
8/29/2014	3-PHASE INDUCTION MOTOR	TEFC
TYPE		CATALOG#
AEUH8NDC		EPV1/54C

NAMEPLATE INFORMATION

OUTPUT HP	OUTPUT KW	POLE	FRAME SIZE	VOLTAGE	HZ	RATED AMBIENT	INS. CLASS	NEMA DESIGN	TIME RATING	SERVICE FACTOR
1.5	1.1	4	145TC	230/460	60	40°C	F	B	CONT.	1.15

VARIABLE FREQUENCY DRIVE SERVICE

VARIABLE TORQUE			
HZ	HP	RPM	TORQUE (lb-ft)
3~60	0.0002~1.5	90~1800	0.011~4.552

OHMS/PHASE EQUIVALENT WYE CIRCUIT (AT RATED OPERATING TEMPERATURE 25°C)				
R1	R2	X1	X2	X_m
5.763	5.3809	13.911	8.6689	209.64

CONSTANT TORQUE				CONSTANT HORSEPOWER			
HZ	HP	RPM	TORQUE (lb-ft)	HZ	HP	RPM	TORQUE (lb-ft)
6~60	.15~1.5	180~1800	4.552	60~120	1.5	1800~3600	4.552~2.276

TYPICAL PERFORMANCE

FULL LOAD RPM	EFFICIENCY FULL LOAD MIN.%	EFFICIENCY FULL LOAD NOM.%	EFFICIENCY 3/4 LOAD %	EFFICIENCY 1/2 LOAD %	POWER FACTOR FULL LOAD %	POWER FACTOR 3/4 LOAD %	POWER FACTOR 1/2 LOAD %	SOUND PRESSURE LEVEL @ 3 FT Db(A)
1730	84	86.5	86.5	85.5	78	70	57	50

CURRENTS NO LOAD AT 208 VOLT	NO LOAD AT 230 VOLT	NO LOAD AT 460 VOLT	FULL LOAD AT 208 VOLT	FULL LOAD AT 230 VOLT	FULL LOAD AT 460 VOLT	LOCKED ROTOR AT 208 VOLT	LOCKED ROTOR AT 230 VOLT	LOCKED ROTOR AT 460 VOLT	NEMA KVA CODE LETTER	SAFE STALL TIME IN SECONDS COLD	SAFE STALL TIME IN SECONDS HOT
1.95	2.22	1.11	4.60	4.16	2.08	36.2	40.0	20	M	57	40

TORQUE FULL LOAD (lb-ft)	TORQUE LOCKED ROTOR %FLT	TORQUE PULL UP %FLT	TORQUE BREAK DOWN %FLT	INERTIA ROTOR WR^2 ($lb\text{-}ft^2$)	INERTIA NEMA LOAD WK^2 ($lb\text{-}ft^2$)	INERTIA MAX ALLOWABLE WK^2 ($lb\text{-}ft^2$)	ACCEL TIME (DOL) NEMA LOAD WK^2 Sec	ACCEL TIME (DOL) MAX ALLOWABLE WK^2 Sec	ALLOWABLE STARTS PER HOUR COLD	ALLOWABLE STARTS PER HOUR HOT
4.55	300	260	360	0.093	8.6	47	3.62	19.59	2	1

APPROVED:	M. PRATER	DRAWING NO.	31057EPV1/54C	REVISION:	1

DATE: September 13, 2006	CONNECTION DIAGRAM	CATALOG NO.: EPV1/54C

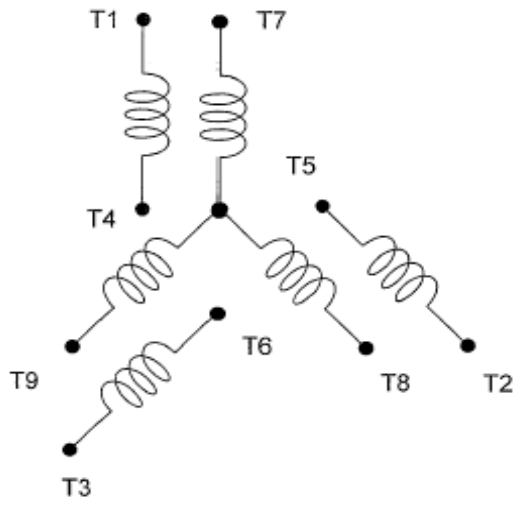

SCHEMATIC - 2Y/Y CONNECTION

ACROSS THE LINE CONNECTION

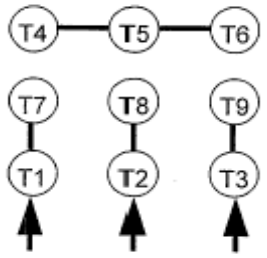

LINE
230 VOLT CONNECTION

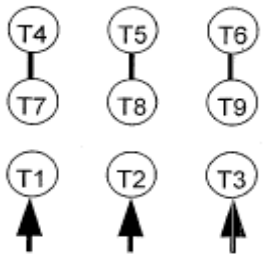

LINE
460 VOLT CONNECTION

TECO Westinghouse	DWG NO. DAC-1566-2

zima
Jagenberg Group

Manufacture.Quality.Solutions.

Kusters Water Division

AGMA CALCULATIONS

ANSI/ AGMA 2001-C95 GEAR CALCULATIONS

INPUT DATA	
Drive Unit Size:	**30**
Drive Gear Material (Steel / Ductile):	**Steel**
Drive Unit Output Speed - RPM:	**0.042**
Drive Pinion Output Speed - RPM:	0.17

GEAR DURABILITY FACTORS		
Pinion Speed:	np	0.17
Face Width:	F	3.75
Geometry Factor:	I	0.208
Dynamic Factor:	Kv	1.0051
Load Distribution Factor:	Km	1.32
Operating Pitch Diameter:	d	7.279
Contact Stress (Pinion):	Sac	195000
Contact Stress (Gear):	Sac	195000
Pitting Stress Cycle (Pinion):	Zn	1.100
Pitting Stress Cycle (Gear):	Zn	1.20

Dynamic Factor Calculation - Kv	
Vt =	0.33
B =	0.63
A =	70.7
Kv =	1.0051

Pitting Stress Calculation - Zn - Pinion	
Zn =	1.100
n =	1,836,657

Pitting Stress Calculation - Zn - Gear	
Zn =	1.20
n =	441,504

GEAR STRENGTH FACTORS		
Pinion Speed:	np	0.17
Face Width:	F	3.75
Dynamic Factor:	Kv	1.0051
Diametral Pitch:	Pd	2.5
Geometry Factor (Pinion):	Jp	0.454
Geometry Factor (Gear):	Jg	0.454
Operating Pitch Diameter:	d	7.279
Bending Stress (Pinion):	Sat	55000
Bending Stress (Gear):	Sat	55000
Stress Cycle (Pinion):	Yn	1.094
Stress Cycle (Gear):	Yn	1.270
Gear Set Ratio:	Gs	4.16:1
Hardness Factor:	Ch	1.05

Stress Cycle Calculation - Yn - Pinion	
Yn =	1.094
n =	1,836,657

Stress Cycle Calculation - Yn - Gear	
Yn =	1.270
n =	441,504

AGMA CALCULATIONS

TITLE	PROJECT NUMBER: WTxxxxx CUSTOMER NAME
30" GEARSET ANSI / AGMA 2001-C95 STRENGTH AND DURABILITY	8630 - STEEL

BENDING STRENGTH POWER RATING:

FOR PINION:

$$PAT = \frac{0.1747 \quad 7.279}{126000 \quad 1.0051} \quad \frac{3.75}{2.5} \quad \frac{0.454 \quad 55000 \quad 1.0945}{1.32}$$

= .312 HP = 38,983 FT. LBS.

FOR GEAR:

$$PAT = \frac{0.1747 \quad 7.279}{126000 \quad 1.0051} \quad \frac{3.75}{2.5} \quad \frac{0.454 \quad 55000 \quad 1.2703}{1.32}$$

= .362 HP = 45,245 FT. LBS.

PITTING RESISTANCE POWER RATING:

FOR PINION:

$$PAC = \frac{0.1747 \quad 3.75}{126000} \quad \frac{0.208}{1.0051 \quad 1.32} \left(\frac{7.279 \quad 195000 \quad 1.0995 \quad 1.05}{2290} \right)^2$$

= .417 HP = 52,181 FT. LBS.

FOR GEAR:

$$PAC = \frac{0.1747 \quad 3.75}{126000} \quad \frac{0.208}{1.0051 \quad 1.32} \left(\frac{7.279 \quad 195000 \quad 1.1956 \quad 1.05}{2290} \right)^2$$

= .494 HP = 61,693 FT. LBS.

THE DRIVE UNIT IS RATED FOR 38,983 FT. LBS. @ .042 RPM

COPYRIGHT © HI-TECH / KUSTERS WATER

AGMA CALCULATIONS

TITLE	PROJECT NUMBER: WTxxxxx CUSTOMER NAME
30" GEARSET ANSI / AGMA 2001-C95 AGMA YIELD STRENGTH RATING	8630 - STEEL

FOR PINION:

$$\text{Pay} = \frac{0.1747 \quad 7.279}{126000 \quad 1.005} \quad \frac{3.75}{2.5} \quad \frac{0.454 \quad 131080}{1.32}$$

= .679 HP = 84,886 FT. LBS.

FOR GEAR:

$$\text{Pay} = \frac{0.1747 \quad 7.279}{126000 \quad 1.005} \quad \frac{3.75}{2.5} \quad \frac{0.454 \quad 90000}{1.32}$$

= .466 HP = 58,283 FT. LBS.

COPYRIGHT © HI-TECH / KUSTERS WATER

zima
Jagenberg Group
Manufacture.Quality.Solutions.
Kusters Water Division

MAIN BEARING CALCULATIONS

TURNTABLE BEARING CALCULATIONS

TITLE	PROJECT NUMBER
LIFE RATING OF MAIN BEARING	JOB# WT87807

INPUTS:

	Drive Unit Size =	30"	
dpw =	Pitch Diameter =	35"	
dw =	Ball Diameter =	1.3"	
Z =	Number of Balls =	82	
a =	Nominal Contact Angle =	50°	
fh =	Raceway Hardness Factor - Table 4 =		0.59
Thrust fcm =	Raceway Material Factor - Table 3 =		1692
Radial fcm =	Raceway Material Factor - Table 6 =		1021
e =	Weibull Exponent		
Ft =	Hanging Weight of Mechanism =	10,600	

Operating RPM = 0.042 Operating Torque = 36,000 ft/lbs

Raceway Material = 50 RC Minimum

CALCULATE B-10 LIFE OF THRUST ROW

$$L10 = \left(\frac{CA}{PEQUIV}\right)^3 = \left(\frac{27{,}205}{10{,}600}\right)^3 = 16.91 \text{ MILLION CYCLES}$$

THEREFORE:

$$B10 = \frac{L10 \times 10^6}{60 \times RPM} = \frac{16{,}905{,}550}{2.52} = 6{,}708{,}552 \text{ HOURS}$$

CALCULATE B-10 LIFE OF RADIAL ROW

$$L10 = \left(\frac{CR}{Fr}\right)^3 = \left(\frac{16{,}416}{9{,}578}\right)^3 = 5.036 \text{ MILLION CYCLES}$$

$$B10 = \frac{L10 \times 10^6}{60 \times RPM} = \frac{5{,}035{,}620}{2.52} = 1{,}998{,}262 \text{ HOURS}$$

WHERE

$$\frac{1}{L10E_{BEARING}} = \frac{1}{L10E_{RADIAL}} + \frac{1}{L10E_{THRUST}}$$

E= 10 / 9

$$L10BRG = 1 \Big/ \left[\frac{1}{5.036^{\frac{10}{9}}} + \frac{1}{16.906^{\frac{10}{9}}}\right]^{\frac{9}{10}} =$$

= 4.089 MILLION REVOLUTIONS = 1,622,579 HOURS

© 2001 KUSTERS ZIMA CORPORATION

KUSTERS ZIMA CORPORATION• P.O. BOX 6128 • SPARTANBURG, SC 29304 • PHONE: 864-576-0660 • FAX: 864-587-5761

TURNTABLE BEARING CALCULATIONS

TITLE	PROJECT NUMBER
DYNAMIC CAPACITY AND THRUST LOAD FOR THRUST ROW	JOB# WT87807

CALCULATION OF DYNAMIC CAPACITY - THRUST ROW

$$Ca = fh \; fcm \; Z^{2/3} \; Dw^{1.4}$$

WHERE:

fh = Hardness Factor Z = Quantity of Balls

fcm = Material Factor Dw = Ball Diameter

THEREFORE:

$$Ca = 0.59 \times 1692 \times 82^{2/3} \times 1.3^{1.4}$$

$$Ca = 27205$$

© 2001 KUSTERS ZIMA CORPORATION

KUSTERS ZIMA CORPORATION• P.O. BOX 6128 • SPARTANBURG, SC 29304 • PHONE: 864-576-0660 • FAX: 864-587-5761

TURNTABLE BEARING CALCULATIONS

TITLE	PROJECT NUMBER
DYNAMIC CAPACITY AND THRUST LOAD FOR RADIAL ROW	JOB# WT87807

CALCULATION OF DYNAMIC CAPACITY - RADIAL ROW

$$Cr = fh \; fcm \; Z^{2/3} \; Dw^{1.4}$$

WHERE:

fh = Hardness Factor Z = Quantity of Balls

fcm = Material Factor Dw = Ball Diameter

THEREFORE:

$$Cr = 0.59 \times 1021 \times 82^{2/3} \times 1.3^{1.4}$$

$$Cr = 16416$$

CALCULATION OF RADIAL THRUST LOAD - RADIAL ROW

$$Fr = \sqrt{(Wt \times \tan 20°)^2 + Wt^2}$$

WHERE:

Wt = Tangential Gear Load = (TORQUE x .25) = 9,000

20° = Pressure Angle

THEREFORE:

$$Fr = \sqrt{(9{,}000 \times \tan(20°)^2 + 9{,}000^2}$$

$$Fr = 9{,}578$$

© 2001 KUSTERS ZIMA CORPORATION

KUSTERS ZIMA CORPORATION• P.O. BOX 6128 • SPARTANBURG, SC 29304 • PHONE: 864-576-0660 • FAX: 864-587-5761

zima
Jagenberg Group

Manufacture.Quality.Solutions.

Kusters Water Division

INTERMEDIATE REDUCER CALCULATIONS

Rossi

EP R 4EL 015A 404Y C090M2 F30c UHSB13 V1 SV

Rossi S.p.A.
Via Emilia Ovest, 915/A
Ph. +39 059 330288

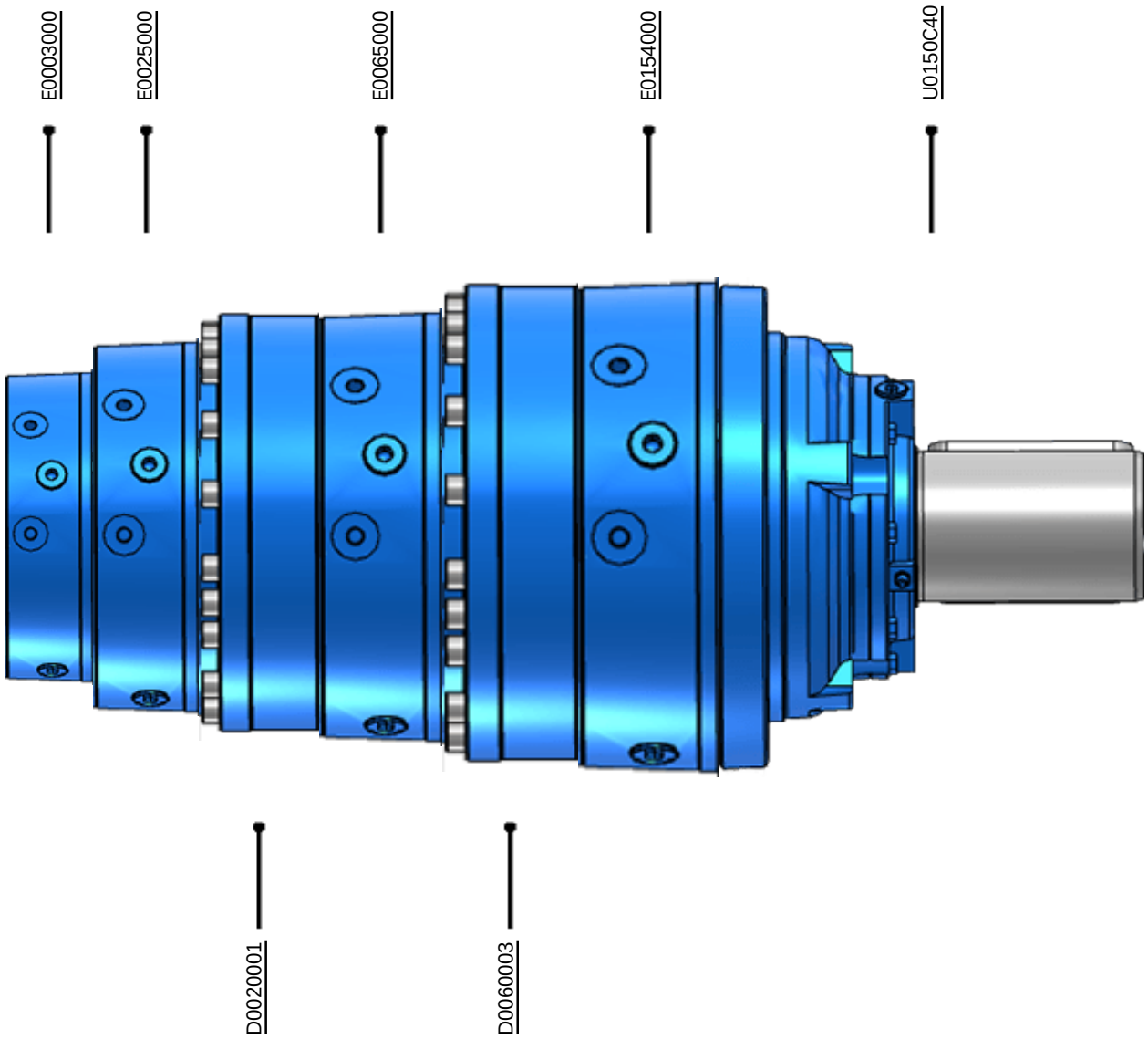
E0003000
E0025000
E0065000
E0154000
U0150C40
D0020001
D0060003

Planetary gear reducer - EP series

Application given data

Target products set		Catalog products only
Standard		ISO 6336
Measure system		Imperial
Shaft arrangement		In-line (xEL)
Reducer life	[hours]	10 000
Input speed n_1	[min^{-1}]	74
Output speed N2	[min^{-1}]	0.18
Effective ratio i		From 403.52 to 428.48
Loads		Constant load
Estimated input power P_1	[hp]	0.34
Output torque M_2	[Lb-in]	105 637
Service factor s_f		From 1 to 2

Thermal power *Pt*

Max. environment temperature	[°F]	68
Air speed on the housing		Large, no ventilation (air speed 2.24 [mph])
Type of duty		Continuous - S1
Cooling system		Natural convection
Mounting position		Horizontal
Installation altitude		up to 1 094 [yd]

External loads

Low speed shaft end

External loads on the low speed shaft cannot be applied to this product

High speed shaft end

No radial loads applied on the high speed shaft end

No axial loads applied on the high speed shaft end

Designation

EP R 4EL 015A 404Y C090M2 F30c UHSB13 V1 SV

Standard (catalog) product
4 stages in line
Size 015A
Cylindrical [C], shaft diameter Ø090 metric system units model 2, flange mounting model 30 Mounting position c
Hydraulic motor adapter
Mounting position V1
Coupling dimension UHSB13

Accessories

Unpainted; supplied with standard primer only

Technical data

Effective ratio i		403.6
Output speed n_2	[min^{-1}]	0.18
Input speed n_1	[min^{-1}]	74
Input power P1	[hp]	0.34
Output torque M_2	[Lb-in]	102 495.98
Service factor s_f		1.26
Efficiency η		0.89

Nominal data

Nominal input power P_{N1}	[hp]	0.43
Nominal output power P_{N2}	[hp]	0.39
Nominal output torque M_{N2}	[Lb-in]	132 761
Maximum output torque $M_{2\ MAX}$	[Lb-in]	159 313
Maximum input speed $n1_{MAX}$	[min^{-1}]	2 800
Peak input speed $n1_{PEAK}$ (max. 5 seconds)	[min^{-1}]	3 150
Nominal thermal power P_{TN}	[hp]	12.07
Max. output torque $M_{N2\ MAX}$	[Lb-in]	132 761

Verification

Thermal power *Pt*

$$PT = PT_N * ft_1 * ft_2 * ft_3 * ft_4 * ft_5$$

Pt_N		nominal thermal power when operating in following running conditions: • input speed n_1 = 1 400 [min^{-1}] • mounting position B3 • continuous duty S1 • maximum ambient temperature 40° C • maximum altitude 1 000 [m] above sea level • air speed 1.25 [m/s] (typical value in presence of a gearmotor with self-cooled motor)
ft_1		Thermal factor according to mounting position
ft_2		Thermal factor according to ambient temperature and service
ft_3		Thermal factor according to cooling system and input speed n1
ft_4		thermal factor according to installation altitude
ft_5		thermal factor according to air speed on housing
Thermal power Pt	[hp]	$Pt = Pt_N \cdot ft_1 \cdot ft_2 \cdot ft_3 \cdot ft_4 \cdot ft_5$ $= 12.07 \cdot 1.4 \cdot 1.32 \cdot 1 \cdot 1 \cdot 0.9$ $= 20.07$
Applied power P_1	[hp]	0.34
Thermal power verification passed		

Stages technical data

Stage no#	Size	Effective ratio i	Input speed n_1 [rpm]	Output speed n_2 [rpm]	Critical element	M_{N2} gr [Lb-in]	Service factor s_f gr	Lh gr [hours]	M_{N2} bear [Lb-in]	Service factor s_f bear	Lh bear [hours]
1	000	3.45	74	21.449	Gr. lim. II	469 460.3	4.444	> 300 000	1 002 743.3	9.492	> 300 000
2	002	5.294	21.449	4.052	Gr. lim. I	297 123.3	2.813	> 300 000	630 895.2	5.972	> 300 000
3	006	5.294	4.052	0.765	Static	189 920.1	1.798	> 300 000	570 562.3	5.401	> 300 000
4	015	4.174	0.765	0.183	Static	132 761.2	1.257	> 300 000	587 280.7	5.559	> 300 000

Notes
MN2 gr: gears nominal performance for each stage, reported to reducer low speed shaft

Lh bear: planet bearings theoretical duration

Bill of materials

Item	Part no#	Description
Gear reducer output	U0150C40	Output 015 C090M2 F30c V3
Output stage	E0154000	In-Line Stage S 1500 - 4,174
Spacer	D0060003	Spacer 003-009/004-012
In-line stage	E0065000	In-Line Stage S 006 - 5,294
Spacer	D0020001	Spacer 001-003/002-006
In-line stage	E0025000	In-Line Stage S 002 - 5,294
In-line stage	E0003000	In-Line Stage S 000 - 3,450
2nd input	SB13	INPUT SAE-B 1" (1/4"-58)
Universal spacer	D0000001	Spacer 000 (UNIVERSAL)
Assembly	ASS4EL015A	Assembly 4EL 015A
Accessories		
Painting	SV []	Unpainted; supplied with standard primer only

Main dimensions [mm] (for accessories, see following pages)

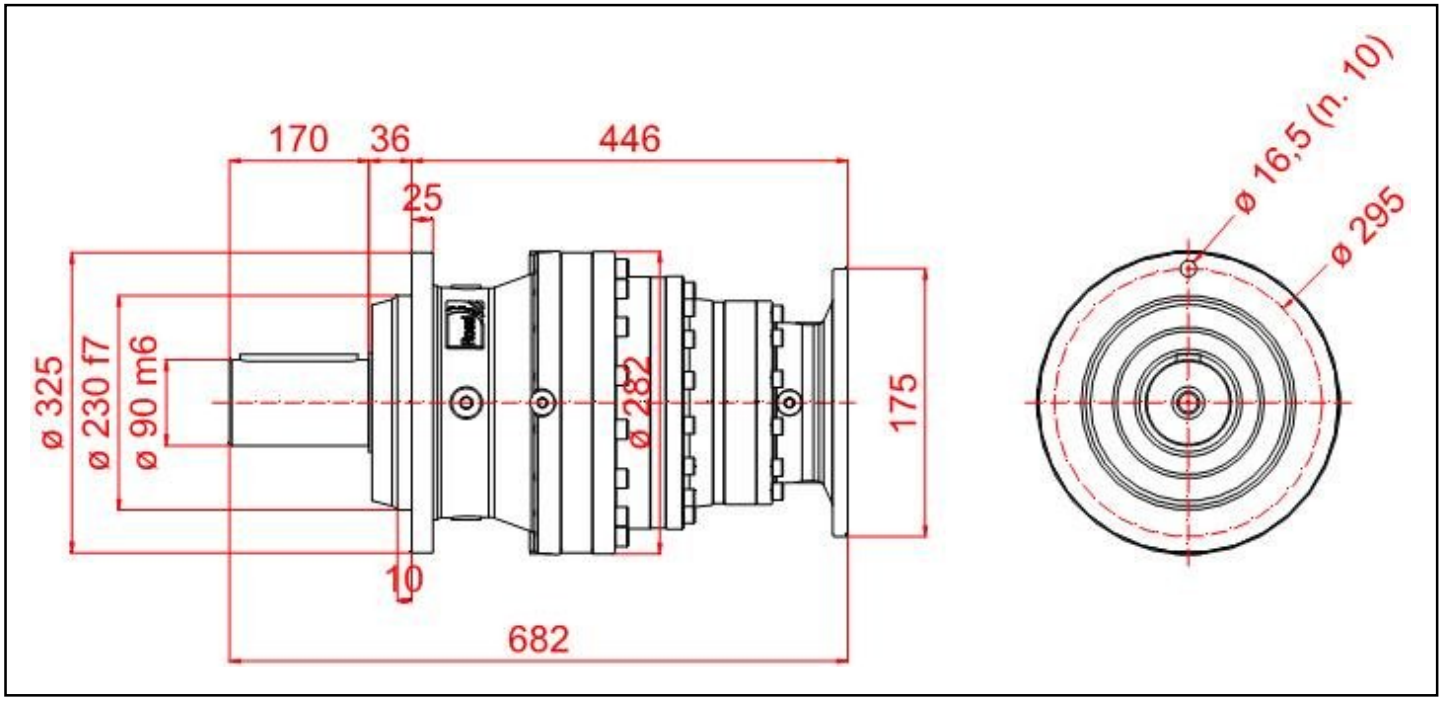

Plugs position (supplied with oil as standard)

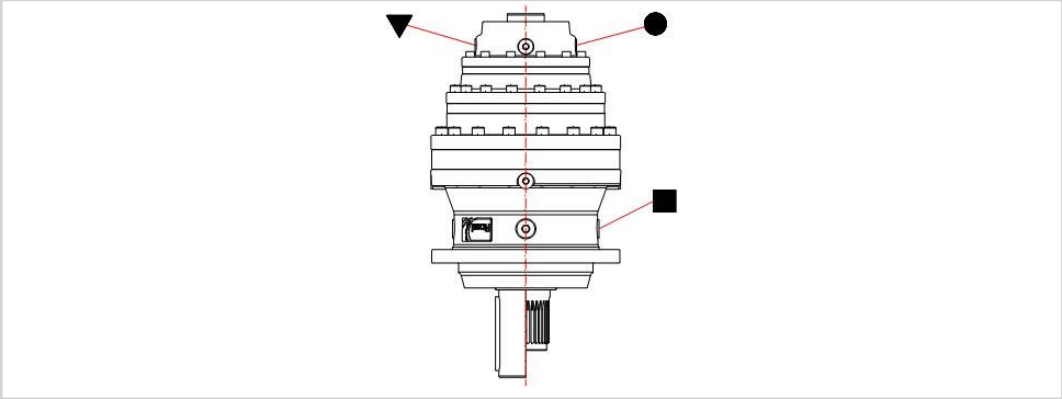

Shaft code

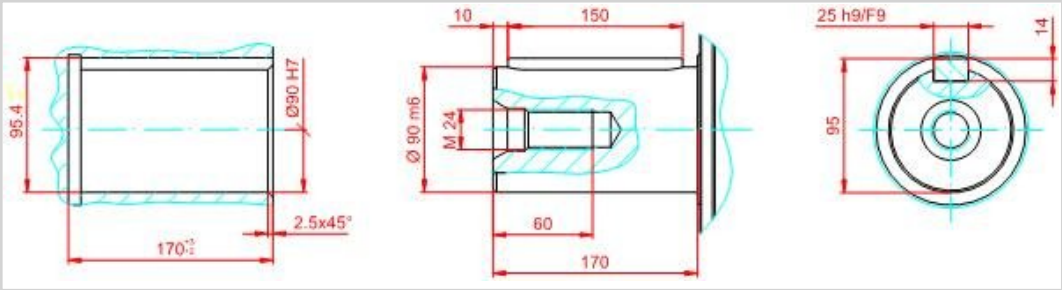

Input UH Hydraulic motor adapter

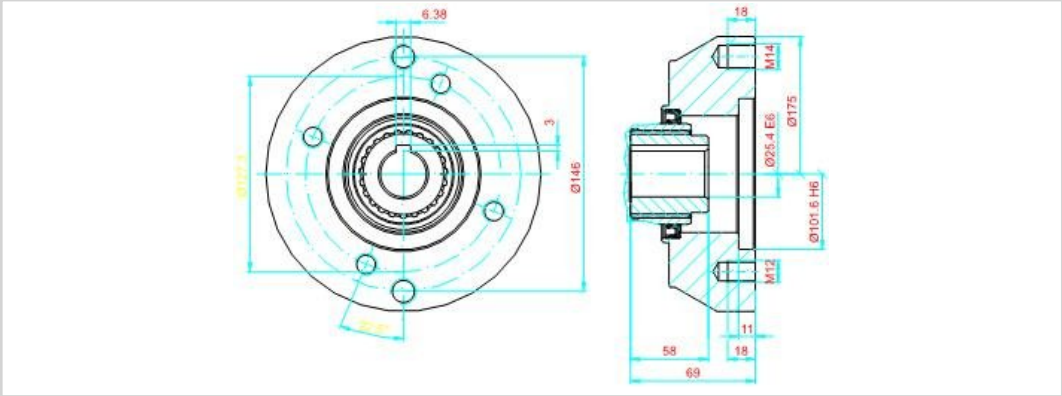

Product liability, application considerations

The customer is responsible for the correct selection and application of product in view of its industrial and/or commercial needs, unless the use has been recommended by technical qualified personnel of Rossi, who were duly informed about customer's application purposes. In this case all the necessary data required for the selection shall be communicated exactly and in writing by the customer, stated in the order and confirmed by Rossi. The customer is always responsible for the safety of product applications. Every care has been taken in the drawing up of the catalog to ensure the accuracy of the information contained in this publication, however Rossi can accept no responsibility for any errors, omissions or outdated data. Due to the constant evolution of the state of the art, Rossi reserves the right to make any modification whenever to this publication contents. The responsibility for the product selection is of the customer, excluding different agreements duly legalized in writing and undersigned by the parties.

zima
Jagenberg Group
Manufacture.Quality.Solutions.
Kusters Water Division

HYDRAULIC OVERLOAD PROTECTION

White Hydraulic Motor WR255 SERIES-050: 1 GPM

JOB #: WT87807

FINAL OUTPUT RPM:	0.04244		
PINION RATIO:	4.1667	HYDRAULIC MOTOR OUTPUT TORQUE (LB-IN)	HYDRAULIC GAUGE PRESSURE
INPUT RPM:	73.6		
CONT. OPPERATING TORQUE (LB-FT)	36000	281	814
ALARM TORQUE (LB-FT)	36000	281	814
CUT OFF TORQUE (LB-FT)	46800	366	1054
RELIEF TORQUE (LB-FT)	54000	422	1214
REQ'D HYDRAULIC GEARBOX RATIO	416		
REQ'D MOTOR HP	0.71		

WR Product Line

050

50 cm³ [3.1 in³] / rev

Pressure - bar [psi]

	17 [250]	35 [500]	52 [750]	69 [1000]	86 [1250]	104 [1500]	121 [1750]	138 [2000]	155 [2250] Max. Cont.	172 [2500]	207 [3000] Max. Inter.
Flow - lpm [gpm] / Max. Max. Inter. Cont.	Torque - Nm [lb-in], Speed rpm										
4 [1]	11 [97] **77**	24 [212] **76**	37 [327] **74**	49 [434] **69**	61 [540] **63**	74 [655] **62**	82 [726] **41**	91 [805] **38**			
8 [2]	11 [97] **166**	24 [212] **162**	36 [319] **160**	49 [434] **142**	62 [548] **132**	75 [664] **124**	88 [779] **107**	99 [876] **91**	107 [947] **82**		
15 [4]	9 [80] **296**	23 [204] **291**	36 [319] **283**	49 [434] **272**	62 [548] **267**	75 [664] **248**	88 [779] **231**	99 [876] **215**	110 [973] **199**	123 [1088] **182**	147 [1301] **164**
23 [6]	7 [62] **462**	22 [195] **447**	35 [310] **434**	47 [416] **430**	61 [540] **416**	74 [655] **402**	87 [770] **386**	99 [876] **368**	111 [982] **348**	124 [1097] **324**	149 [1319] **300**
30 [8]	5 [44] **694**	21 [186] **689**	34 [301] **677**	45 [398] **668**	60 [531] **648**	74 [655] **628**	86 [761] **609**	99 [876] **489**	111 [982] **468**	125 [1106] **448**	148 [1310] **428**
38 [10]	3 [27] **764**	19 [168] **748**	32 [283] **738**	45 [398] **728**	57 [504] **718**	70 [619] **698**	82 [726] **680**	95 [841] **664**	107 [947] **644**	120 [1062] **624**	142 [1257] **600**
45 [12]	2 [18] **898**	17 [150] **892**	30 [265] **876**	43 [381] **873**	55 [487] **861**	68 [602] **843**	80 [708] **827**	92 [814] **812**	105 [929] **794**	116 [1027] **778**	138 [1221] **762**
53 [14]		14 [124] **1058**	27 [239] **1065**	39 [345] **1062**	51 [451] **1038**	64 [566] **988**	76 [673] **988**	88 [779] **960**	100 [885] **972**	112 [991] **904**	134 [1186] **880**
61 [16]		11 [97] **1220**	24 [212] **1218**	35 [310] **1212**	47 [416] **1210**	60 [531] **1188**	72 [637] **1180**	84 [743] **1130**	96 [850] **1112**	108 [956] **1080**	130 [1150] **1032**

Intermittent Ratings - 10% of Operation

Theoretical rpm: 80, 160, 300, 460, 600, 760, 900, 1060, 1220

Overall Efficiency - 70 - 100% 40 - 69% 0 - 39%

Rotor Width mm [in]	Theoretical Torque - Nm [lb-in]										
9.9 [.389]	14 [122]	27 [195]	41 [301]	55 [398]	69 [496]	82 [593]	96 [690]	110 [796]	124 [894]	137 [1215]	165 [1458]

Displacement tested at 54°C [129°F] with an oil viscosity of 46cSt [213 SUS]

P109368

SEE NOTE C

ALP1A

Parti accessorie a corredo della pompa standard: linguetta (codice 522070).
Monta flangia 50-2 (A-A) secondo norma SAE J744c.
Le porte standard "D" e "d" sono lavorate secondo la specifica SAE J1926/1 (ISO 11926-1) relativa a porte filettate con tenuta O-ring.

Accessories supplied with the standard pump: key (code 522070).
Mounting flange 50-2 (A-A) in compliance with SAE J744c.
"D" and "d" standard ports are machined in compliance with threaded port with O-ring seal in truncated housing SAE J1926/1 (ISO 11926-1).

MANDATA
OUTLET

ASPIRAZIONE
INLET

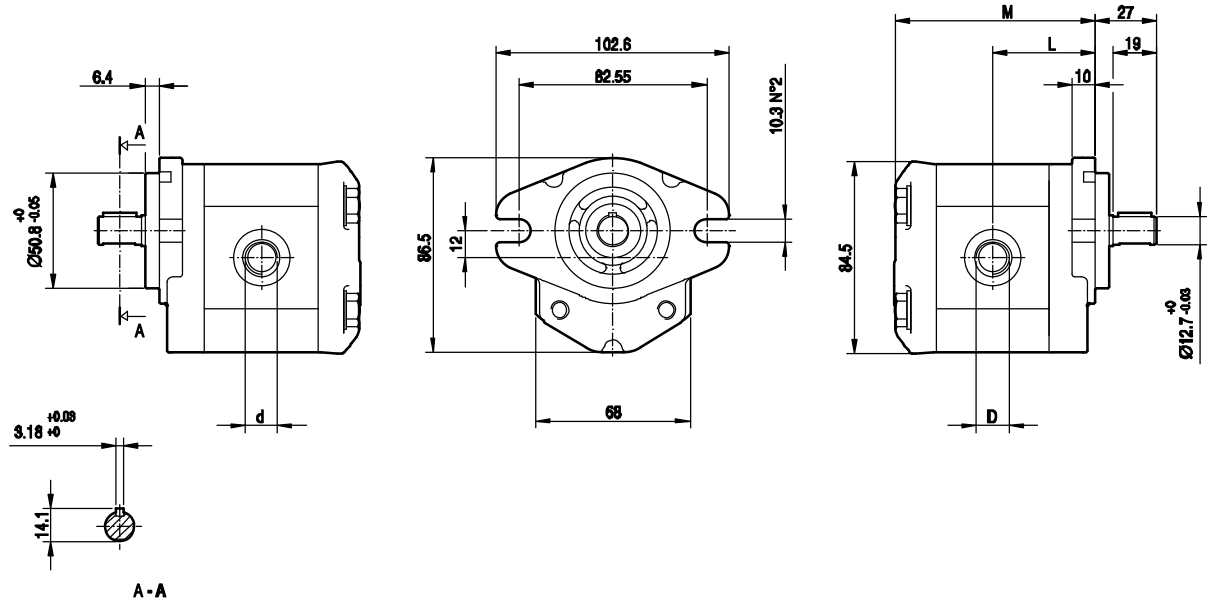

	TIPO *TYPE*	CILINDRATA *DISPLACEMENT*	PORTATA a 1500 giri/min *FLOW at 1500 rev/min*	PRESSIONI MASSIME *MAX PRESSURE*			VELOCITÀ MASSIMA *MAX SPEED*	DIMENSIONI *DIMENSIONS*			
				P_1	P_2	P_3		L	M	d	D
@1750 RPM		cm^3/giro [cm^3/rev]	litri/min [litres/min]	bar	bar	bar	giri/min [rpm]	mm	mm		
0.64 GPM	ALP1A-**D**-2	1,4	2,0	250	270	290	6000	42	82,5	9/16-18 UNF	3/4-16 UNF
0.97 GPM	ALP1A-**D**-3	2,1	2,9	250	270	290	6000	43	84,5	9/16-18 UNF	3/4-16 UNF
1.29 GPM	ALP1A-**D**-4	2,8	3,9	250	270	290	5000	44	86,5	9/16-18 UNF	3/4-16 UNF
1.62 GPM	ALP1A-**D**-5	3,5	4,9	250	270	290	5000	45	88,5	9/16-18 UNF	3/4-16 UNF
1.89 GPM	ALP1A-**D**-6	4,1	5,9	250	270	290	4000	46	90,5	9/16-18 UNF	3/4-16 UNF
2.40 GPM	ALP1A-**D**-7	5,2	7,4	230	245	260	3500	47,5	93,5	9/16-18 UNF	3/4-16 UNF
2.86 GPM	ALP1A-**D**-9	6,2	8,8	230	245	260	3000	49	96,5	9/16-18 UNF	3/4-16 UNF
3.51 GPM	ALP1A-**D**-11	7,6	10,8	200	215	230	3500	51	100,5	3/4-16 UNF	7/8-14 UNF
4.29 GPM	ALP1A-**D**-13	9,3	13,3	180	195	210	3000	53,5	105,5	3/4-16 UNF	7/8-14 UNF
5.08 GPM	ALP1A-**D**-16	11,0	15,7	170	185	200	2500	56	110,5	3/4-16 UNF	7/8-14 UNF
6.38 GPM	ALP1A-**D**-20	13,8	19,7	150	165	180	2000	60	118,5	3/4-16 UNF	7/8-14 UNF

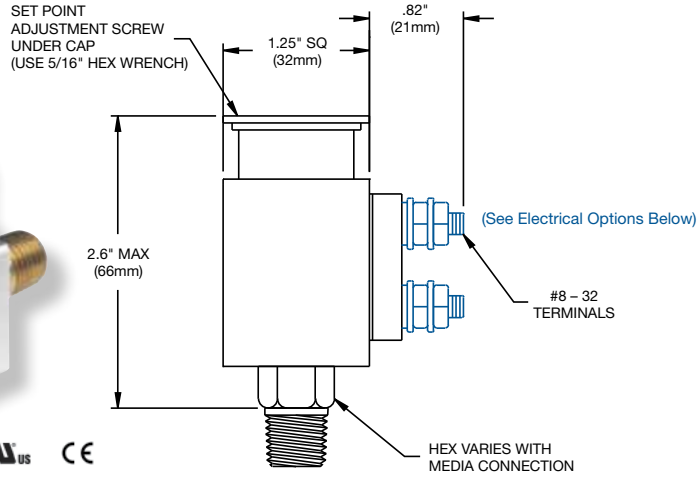

Features

- Long-life elastomer diaphragm
- High-quality snap-action switch
- Field adjustable
- Compact design
- Available in a wide range of configurations
- Proven in the most demanding mobile hydraulic applications
- NEMA 4, 13

Operating Specifications

Set Point Range	50 — 5000 PSI	(1.38 — 344 Bar)
Set Point Tolerance	±5 PSI or 5%	(.34 Bar)
Maximum Operating Pressure	5000 PSI	(344 Bar)
Proof Pressure	15000 PSI	(1034 Bar)
Differential	3 — 10%	
Current Rating	5 A @ 250 VAC	5 A @ 30 VDC (Resistive)
Media Connection	See Order Chart Below for Options	
Circuit Form	SPST-NO or SPST-NC	
Electrical Connection	See Order Chart Below for Options	
Diaphragm Material	Buna N	
Cycle Life	1 Million	

How to Order (Example: Part Number: **WX - 2A - 100J / HR**)

WX - 2 A - 1 0 0 J / HR *

Media Connection

- **1** 1/4" NPT Male
- **2** 1/8" NPT Male
- **4** 7/16" SAE 37° Flare (-4)
- **6** 7/16" SAE O-Ring (-4)
- **11** 9/16" SAE O-Ring (-6)

Circuit Form

- **A** SPST-NO
- **B** SPST-NC
- **C** SPDT

Adjustment Range

- **50 — 150** PSI
- **140 — 400** PSI
- **300 — 800** PSI
- **700 — 2500** PSI
- **2000 — 5000** PSI

Set Point Direction

- **J** Rising Adjustable
- **G** Falling Adjustable

Electrical Options

- **WL** Wire Leads 18"
- **QC** 1/4" Spade Connection
- **WP** Weather Pack
- **HR** DIN43650A Connector
- **MP** Metri-Pack
- **AT** 10 A @ 125/250 VAC 5 A @ 30 VDC
- **GG** Internal Ground
- **AU** Gold Plate/Alloy for low currents

* Defaults to Screw Terminals

For more media connections, see pages 23-24.
For more electrical connections, see page 7.

Direct-acting relief valve

Capacity:
25 gpm (95 L/min.)

Functional Group:
Products : Cartridges : Relief : 2 Port : Direct Acting

Model:
RDDA

Product Description

Direct-acting relief cartridges are normally closed, pressure-limiting valves used to protect hydraulic components from pressure transients. When the pressure at the inlet (port 1) reaches the valve setting, the valve starts to open to tank (port 2), throttling flow to limit the pressure rise. These valves are smooth and quiet, essentially zero leak, dirt tolerant, immune to silting and are very fast.

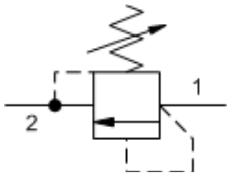

Download

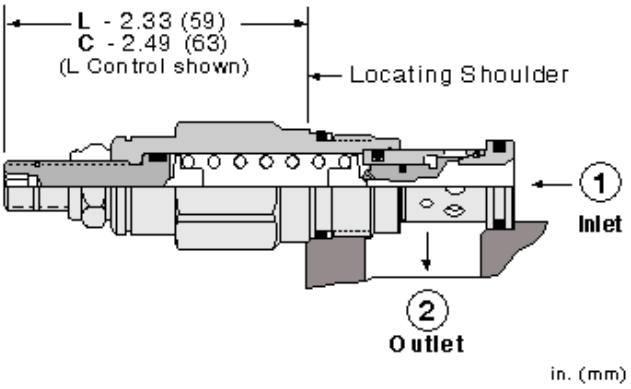

Technical Features

- All 2-port relief cartridges (except pilot reliefs) are physically and functionally interchangeable (same flow path, same cavity for a given frame size).
- Will accept maximum pressure at port 2; suitable for use in cross port relief circuits.
- The seals on the adjust screw are exposed to system pressure which means this valve can only be adjusted when the pressure is removed. The setting procedure is; check the setting, remove the pressure, adjust the valve, check the new setting.
- Valve is relatively insensitive to varying oil temperatures and oil borne contamination.
- Select a spring range where the desired relief setting is approximately mid-range to high between the minimum and maximum pressure to ensure maximum valve repeatability.
- Suitable for use in load holding applications.
- Back pressure on the tank port (port 2) is directly additive to the valve setting at a 1:1 ratio.
- Incorporates the Sun floating style construction to minimize the possibility of internal parts binding due to excessive installation torque and/or cavity/cartridge machining variations.

Technical Data

	U.S. Units	Metric Units
Cavity	T-10A	
Capacity	25 gpm	95 L/min.
Factory Pressure Settings Established at	4 gpm	15 L/min.
Maximum Operating Pressure	5000 psi	350 bar
Maximum Valve Leakage at Reseat	10 drops/min.	0,7 cc/min.
Response Time - Typical	2 ms	
Series (from Cavity)	Series 1	
Reseat	>90 % of Set Pressure	
Adjustment - Number of Clockwise Turns to Increase Setting	6	
Valve Hex Size	7/8 in.	22,2 mm
Valve Installation Torque	30 - 35 lbf ft	40 - 50 Nm

Adjustment Screw Internal Hex Size	5/32 in.	4 mm
Adjustment Locknut/Cap Hex Size	9/16 in.	15 mm
Adjustment Nut Torque	80 - 90 lbf in.	9 - 10 Nm
Seal Kits - Cartridge	Buna: 990-310-007	
Seal Kits - Cartridge	Viton: 990-310-006	
Model Weight	0.37 lb.	0.17 kg.

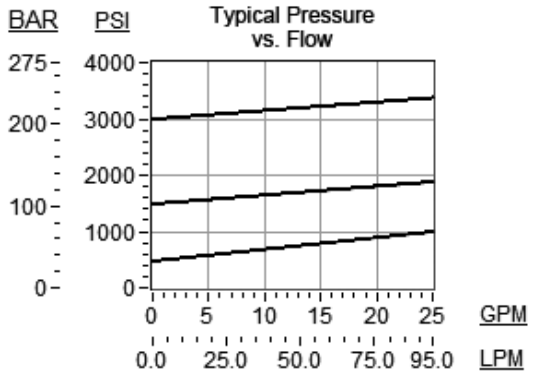

RDDA-LAN

Control

Preferred Options

L Standard Screw Adjustment

Standard Options

C* Tamper Resistant - Factory Set

R* Capped Screw Adjustment with Lockwire Holes

Adjustment Range

Preferred Options

A 500 - 3000 psi (35 - 210 bar), 1000 psi (70 bar) Standard Setting

W 800 - 4500 psi (55 - 315 bar), 1000 psi (70 bar) Standard Setting

Standard Options

B 300 - 1500 psi (20 - 105 bar), 1000 psi (70 bar) Standard Setting

C 1000 - 6000 psi (70 - 420 bar), 1000 psi (70 bar) Standard Setting

D 200 - 800 psi (14 - 55 bar), 400 psi (28 bar) Standard Setting

E 100 - 400 psi (7 - 28 bar), 200 psi (14 bar) Standard Setting

S 50 - 200 psi (3,5 - 14 bar), 100 psi (7 bar) Standard Setting

Seal Material

Preferred Options

N Buna-N

Standard Options

V Viton

Material/Coating Modifier

Preferred Options

No modifier (standard material with no special coating)

Special Options

/AP Stainless Steel, Passivated

Control: C

Control: L

Control: R

Our corrosion resistant product line is growing! If you are interested in a corrosion resistant option for this model, please contact Sun.

Additional Options (Click Here)

Control

F Hex Head Screw with Locknut

J Capped Screw Adjustment

K Handknob

M Capped Screw Adjustment with Lockwire Holes

Q* Capped and Lockwired

Adjustment Range

Seal Material

W* Max. Setting Limiter

If the control is K, the range must be B,D,E or S
If the control is 3, the range must be A,C or D
When the control is F, the range must be A
When the modifier is /AP, the control must be C, L or R

* Special Setting required, specify at time of order
Customer specified setting stamped on hex $ 2.00

Related Models
RDDA3

Related Documents (opens in new window):

- Explanation of Sun cartridge control options - US units.
- Explanation of Sun cartridge control options - metric units.
- Two-piece, floating cartridge construction.

Copyright © 2002-2011 Sun Hydraulics Corporation. All rights reserved.
Terms and Conditions - **ISO Certification** - **Statement of Privacy**

ENGINEERING
TOMORROW

Technical Information

WD, WP and WR Series
Orbital Motors

www.danfoss.com

WR Product Line

WR 255 and 256 Series

WR 255 and 256 Series Housings

Dimensions shown are without paint. Paint thickness can be up to 0.13 [.005].
Dimensions are charted in *WR 255 and 256 Series Technical Information* on page 85.
(TP) - Taller Pilot Height. Refer to detailed drawing for dimensional differences.

WR Product Line

2-HOLE, SAE A MOUNT, ALIGNED PORTS

A10 1/2-14 NPT **A11** 7/8-14 UNF

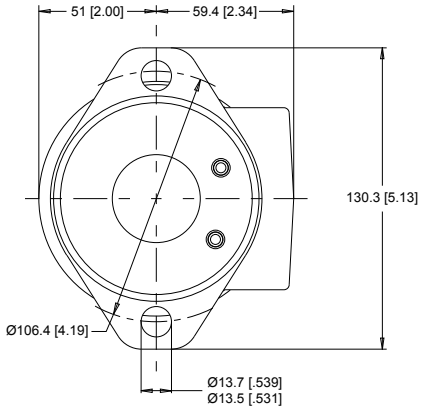

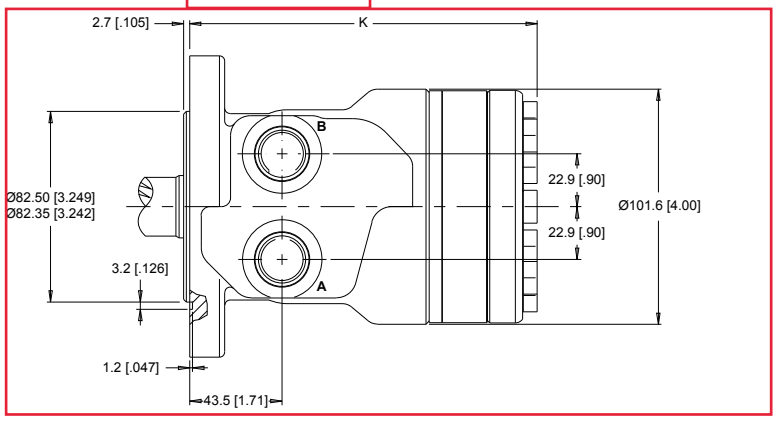

2-HOLE, SAE A MOUNT, OFFSET PORTS

A12 G 1/2 **A62** G 1/2 (TP)

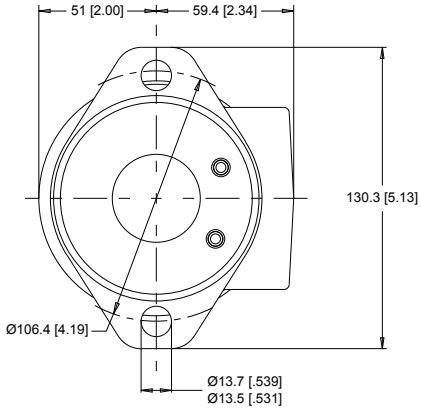

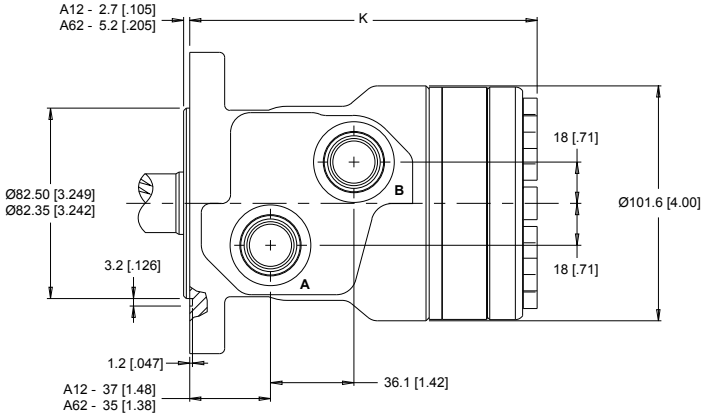

2-HOLE, SAE A MOUNT, OFFSET MANIFOLD PORTS

A13 G 1/2 **A1D** 7/8-14 UNF **A63** G 1/2 (TP)

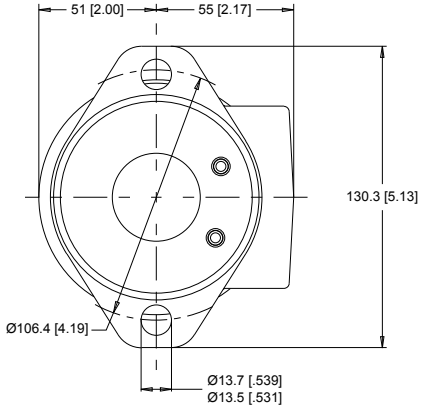

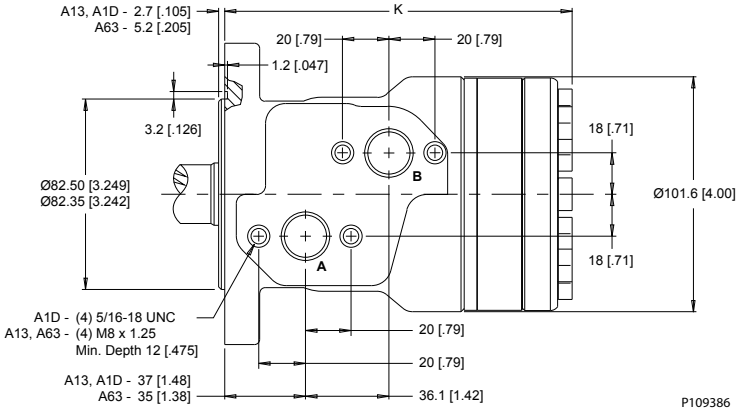

WR Product Line

2-HOLE, SAE A MOUNT, ALIGNED MANIFOLD PORTS **A17** 1/2" Drilled

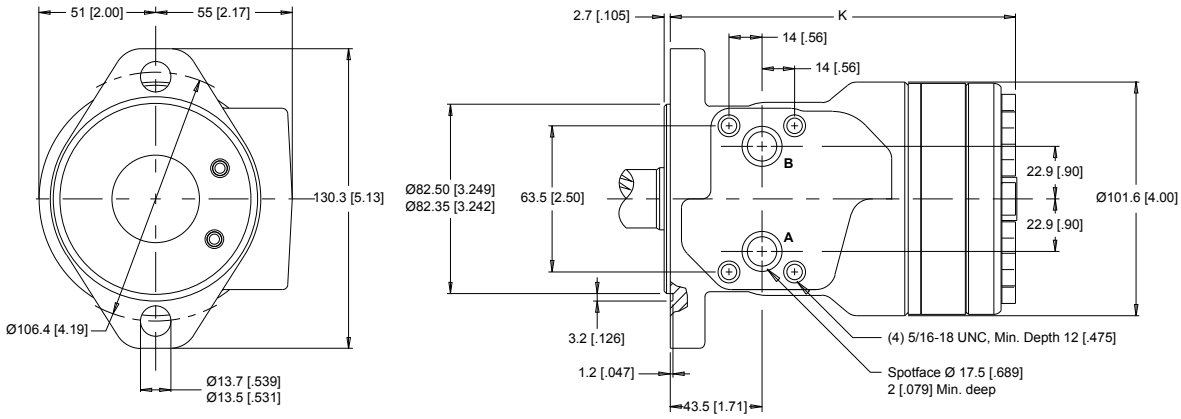

2-HOLE, SAE A MOUNT, OFFSET PORTS, VALVE CAVITY **A19** 7/8-14 UNF

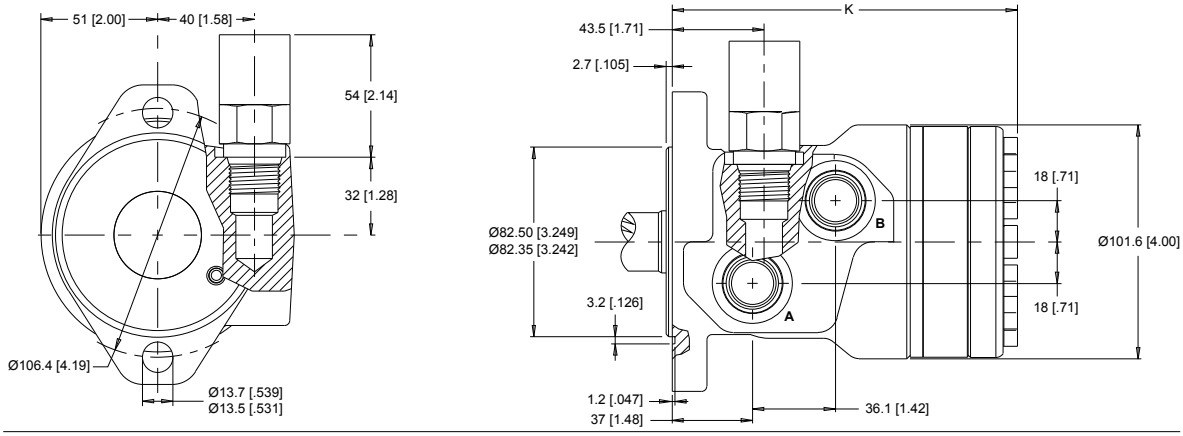

4-HOLE, MAGNETO MOUNT, ALIGNED PORTS **A30** 1/2-14 NPT **A31** 7/8-14 UNF

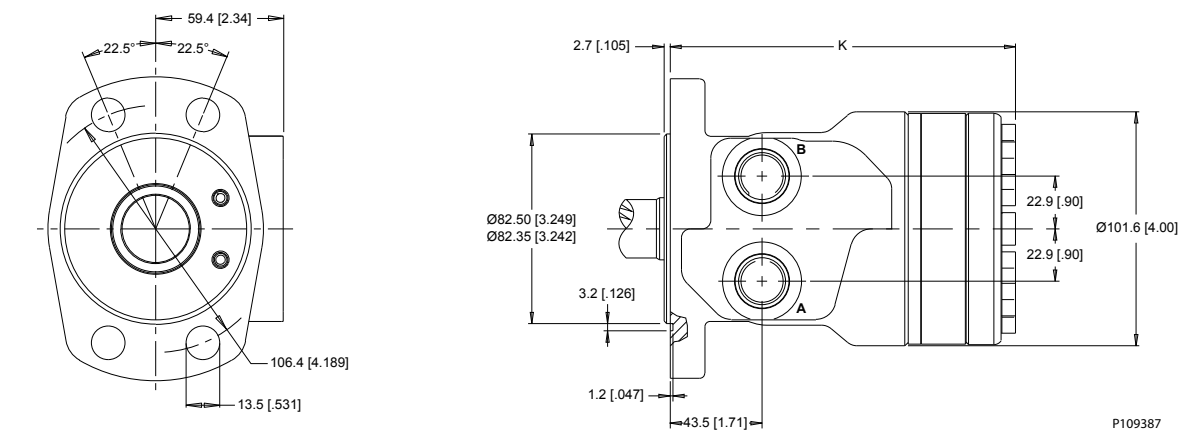

WR Product Line

4-HOLE, MAGNETO MOUNT, OFFSET MANIFOLD

A33 G 1/2 **A3D** 7/8-14 UNF **AC3** G 1/2 (TP)

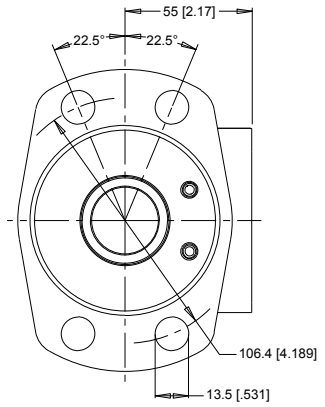

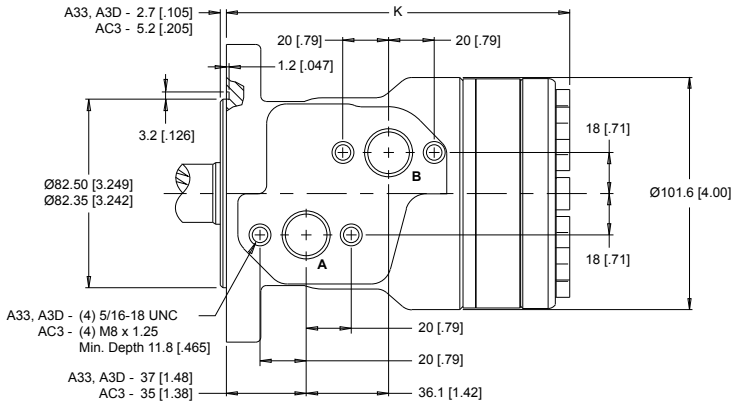

2-HOLE, SAE B MOUNT, ALIGNED PORTS

B11 7/8-14 UNF **B18** G 1/2

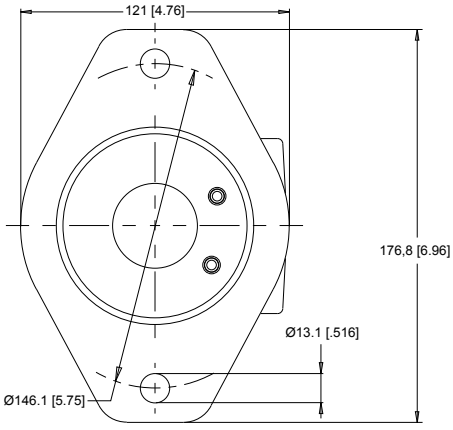

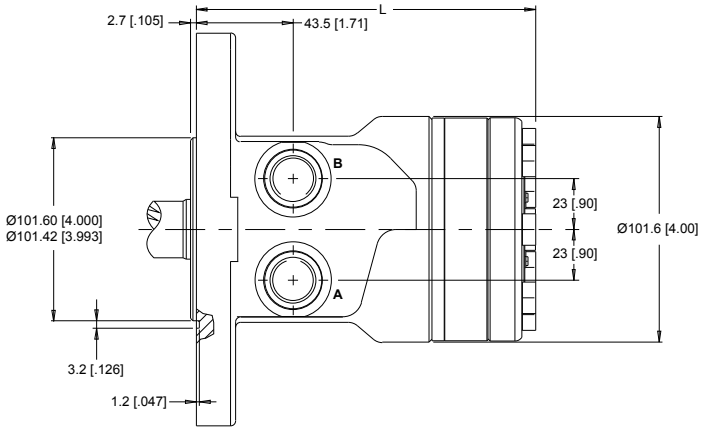

4-HOLE, SQUARE MOUNT, ALIGNED PORTS

F30 1/2-14 NPT **F31** 7/8-14 UNF **F38** G 1/2 **G38** G 1/2

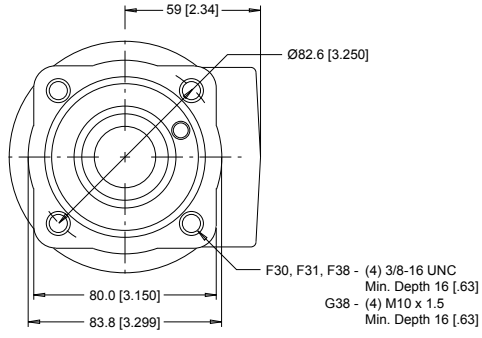

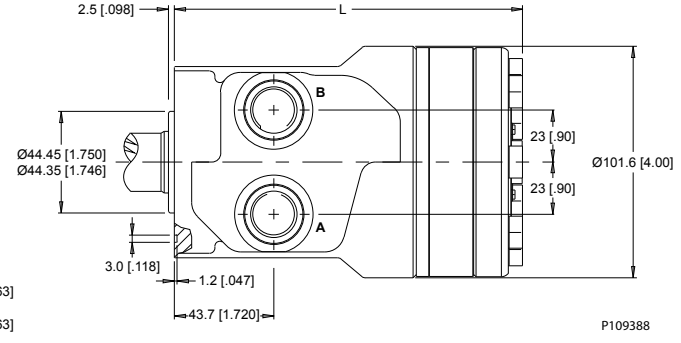

WR Product Line

4-HOLE, SQUARE MOUNT, ALIGNED MANIFOLD PORTS **F37** 1/2" Drilled **G37** 1/2" Drilled

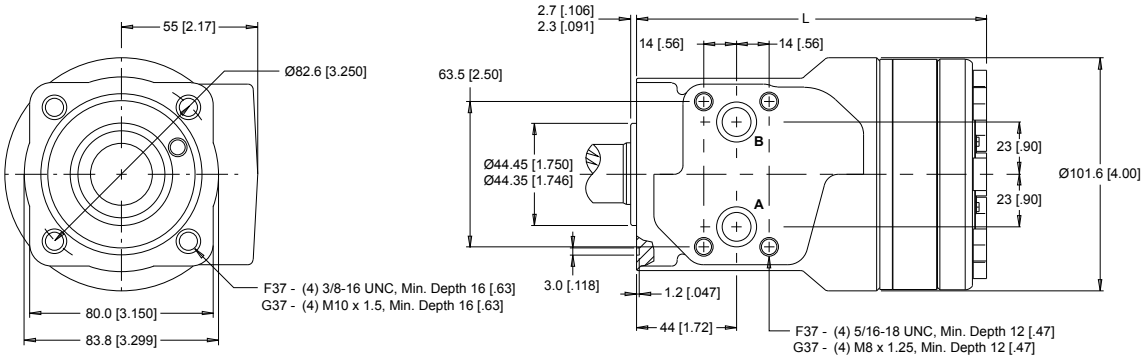

4-HOLE, SQUARE MOUNT, OFFSET MANIFOLD PORTS **F33** G 1/2 **F3D** 7/8-14 UNF

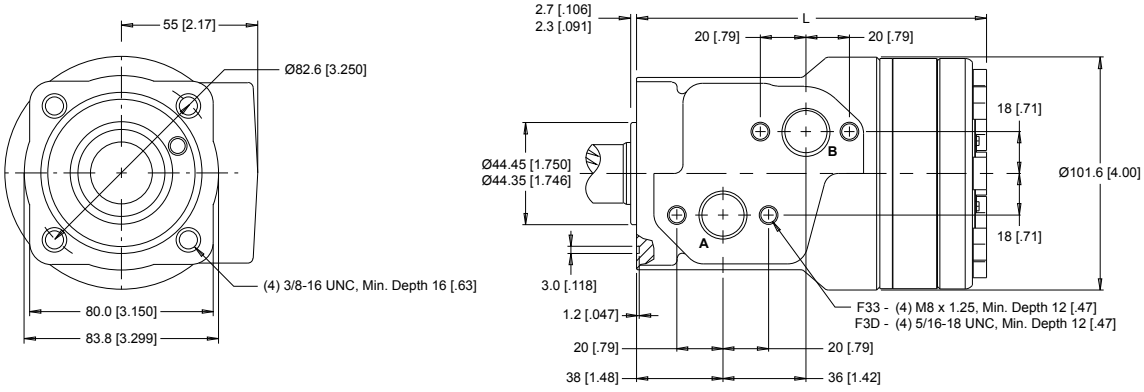

4-HOLE, SQUARE MOUNT, OFFSET PORTS, VALVE CAVITY **F39** 7/8-14 UNF

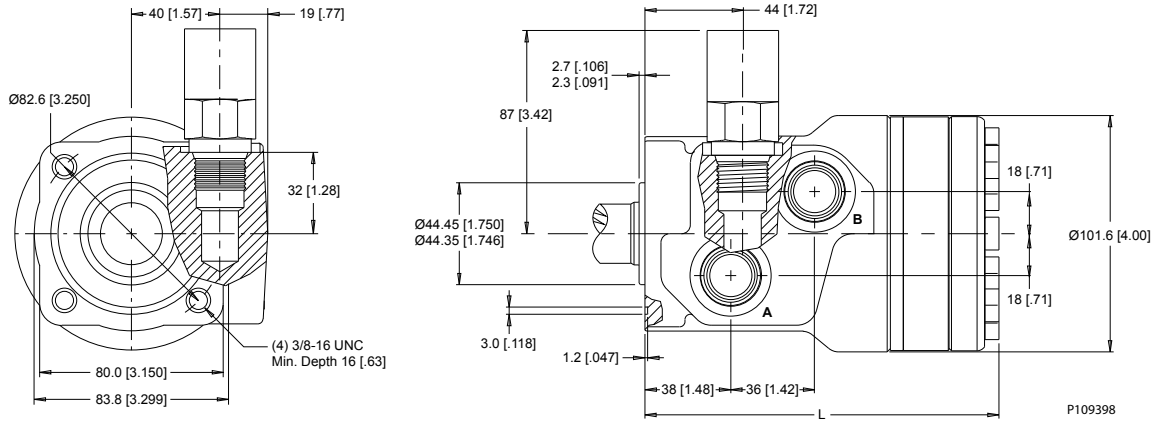

WR 255 and 256 Series Technical Information

Allowable Shaft Load / Bearing Curve

The bearing curve below represents the side load capacity of the motor at the centerline of the key for various motor speeds. Operating conditions within the shaded area will maintain acceptable oil film

WR Product Line

lubrication with recommended fluids. Operating conditions outside the shaded area are susceptible to motor failure due to oil starvation and/or excessive heat generation. Fluids with low lubricity or low viscosity may require the maximum load and speed ratings to be derated to provide acceptable motor life and performance.

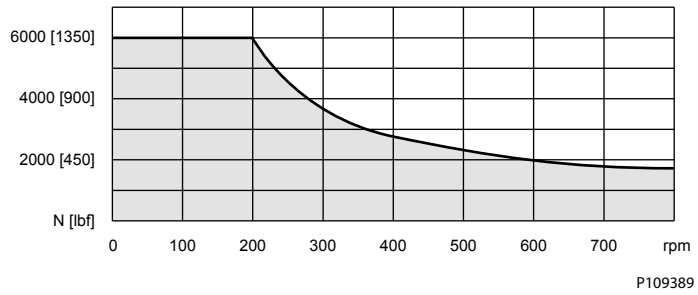

Permissible Shaft Seal Pressure

The curve below represents allowable seal pressure at various speeds. Operation in the gray area results in maintaining the rated life of the shaft seal. Actual shaft seal pressure depends on motor configuration.

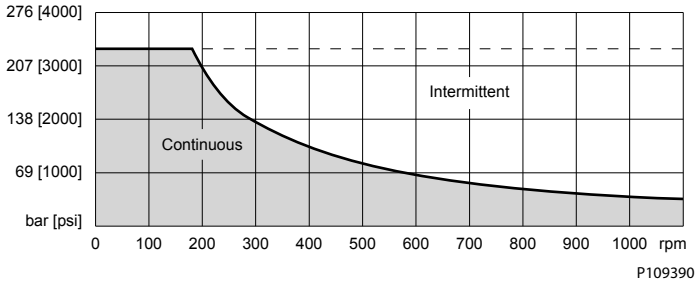

With check valves and drain connection, the shaft seal pressure equals pressure in the drain line. With check valves and no drain connection, shaft seal pressure is identical to output pressure. No check valves and no drain connection, the shaft seal pressure is identical to the average value of input and output pressure.

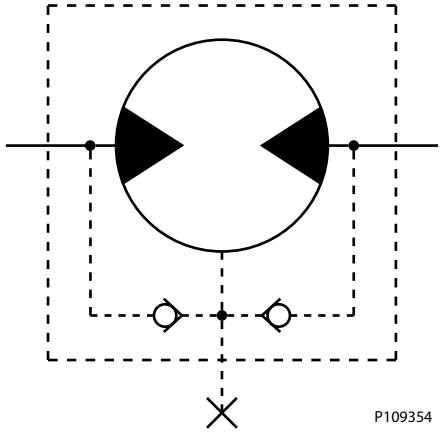

WR Product Line

Thrust Load

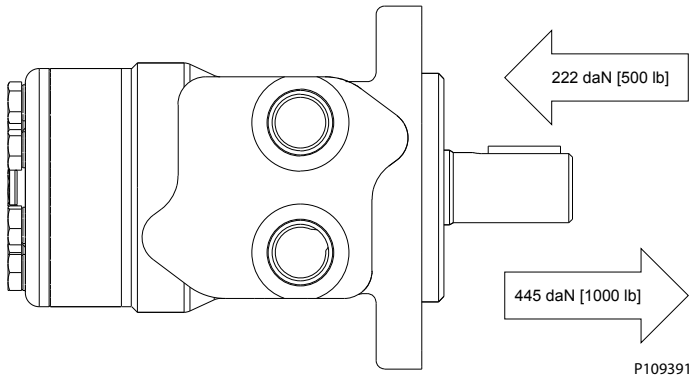

Length and Weight Chart

255 and 256 series motor weights can vary ± 0.5 kg [1 lb] depending on model configurations such as housing, shaft, endcover, options etc.

Dimension K is the overall motor length from the rear of the motor to the mounting flange surface and is referenced on detailed housing drawings listed in *WR 255 and 256 Series Housings* on page 81.

Dimension K

#	3 mm Pilot	8 mm Pilot	Weight
	mm [in]	mm [in]	kg [lb]
040	142 [5.60]	140 [5.50]	6.6 [14.5]
050	144 [5.67]	142 [5.57]	6.6 [14.5]
060	146 [5.74]	144 [5.64]	6.7 [14.7]
070	147 [5.80]	145 [5.70]	6.7 [14.7]
080	150 [5.91]	148 [5.81]	6.8 [15.0]
090	151 [5.96]	149 [5.86]	6.8 [15.0]
100	154 [6.06]	152 [5.96]	6.9 [15.2]
115	156 [6.15]	154 [6.05]	7.1 [15.6]
130	160 [6.28]	158 [6.18]	7.3 [16.0]
160	166 [6.53]	164 [6.43]	7.5 [16.5]
200	173 [6.83]	171 [6.73]	8.0 [17.6]
240	182 [7.15]	180 [7.05]	8.5 [18.7]
250	183 [7.20]	181 [7.10]	8.5 [18.7]
290	192 [7.56]	190 [7.46]	8.8 [19.4]
320	198 [7.78]	196 [7.68]	9.0 [19.8]
400	213 [8.39]	211 [8.29]	9.8 [21.6]

Dimension L is the overall motor length from the rear of the motor to the mounting flange surface and is referenced on detailed housing drawings listed in *WR 255 and 256 Series Housings* on page 81.

WR Product Line

Dimension L

#	Square and B Mounts	B Mount Weight	Sq. Mount Weight
	mm [in]	kg [lb]	kg [lb]
040	142 [5.60]	7.8 [17.2]	5.3 [11.8]
050	144 [5.67]	7.8 [17.2]	5.3 [11.9]
060	146 [5.74]	7.9 [17.4]	5.4 [11.9]
070	147 [5.80]	7.9 [17.4]	5.4 [11.9]
080	150 [5.91]	8.0 [17.6]	5.5 [12.1]
090	151 [5.96]	8.0 [17.6]	5.5 [12.1]
100	154 [6.06]	8.1 [17.8]	5.6 [12.3]
115	156 [6.15]	8.3 [18.3]	5.8 [12.8]
130	160 [6.28]	8.5 [18.7]	6.0 [13.2]
160	166 [6.53]	8.7 [19.1]	6.2 [13.7]
200	173 [6.83]	9.2 [20.2]	6.7 [14.8]
240	182 [7.15]	9.7 [21.3]	7.2 [15.9]
250	183 [7.20]	9.7 [21.3]	7.2 [15.9]
290	192 [7.56]	10.0 [22.0]	7.5 [16.5]
320	198 [7.78]	10.2 [22.4]	7.7 [17.0]
400	213 [8.39]	11.0 [24.2]	8.5 [18.7]

WR Product Line

WR 255 and 256 Series Shafts

Mounting / Shaft Length Chart

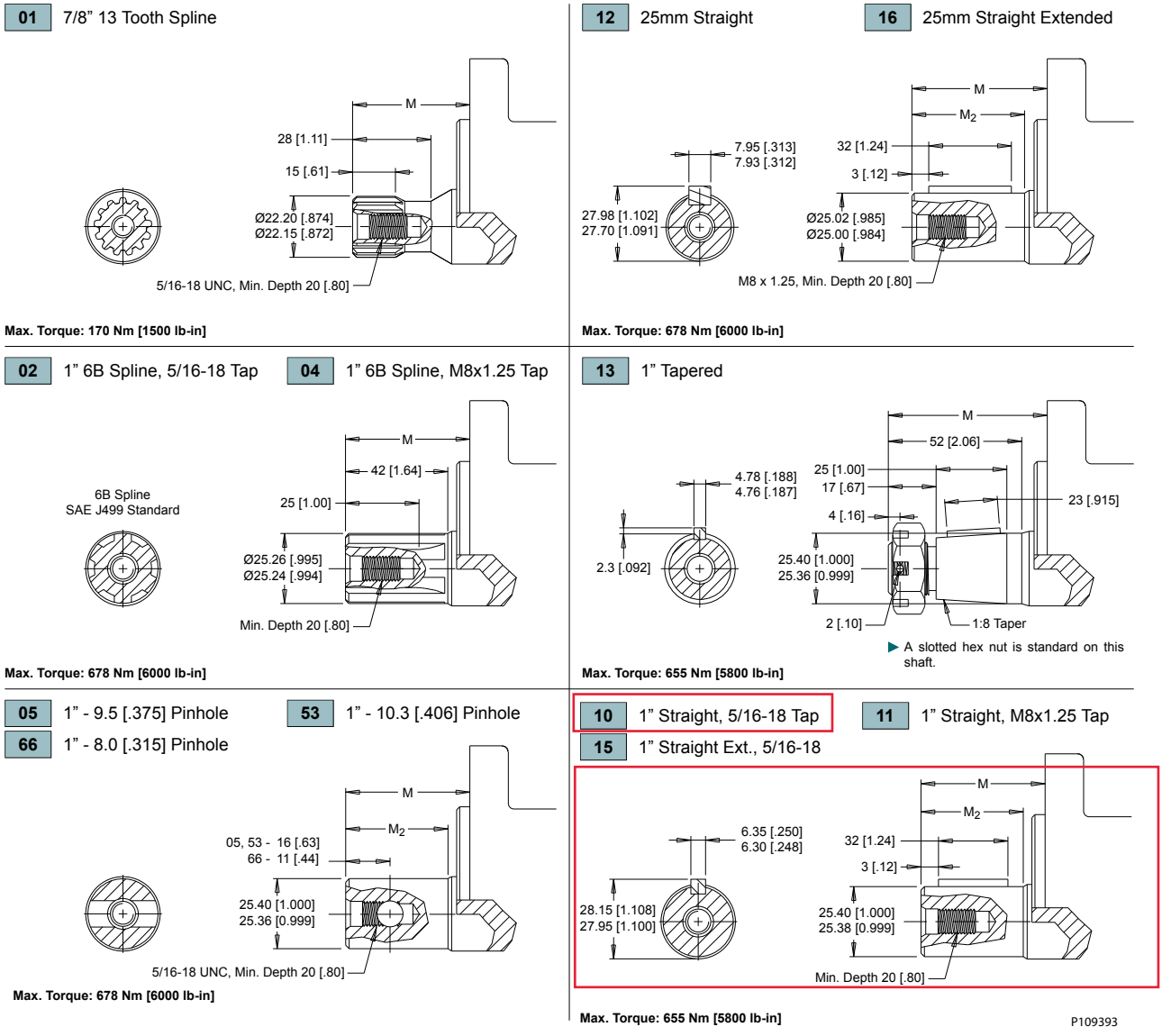

Dimension M is the overall distance from the motor mounting surface to the end of the shaft.

Additional shaft length information, if necessary, is noted as M_2 and does not increase or decrease the listed M dimensions in this chart. The overall shaft lengths are already factored into the overall distance from the mounting surface to the end of the shaft.

#	3 mm Pilot	5 mm Pilot	M_2
	mm [in]	mm [in]	mm [in]
01	40 [1.59]	43 [1.69]	N/A
02	48 [1.88]	51 [1.98]	N/A
04	48 [1.88]	51 [1.98]	N/A
05	48 [1.88]	51 [1.98]	42 [1.64]

WR Product Line

#	3 mm Pilot	5 mm Pilot	M_2
	mm [in]	mm [in]	mm [in]
10	48 [1.88]	51 [1.98]	42 [1.64]
12	53 [2.08]	56 [2.18]	43 [1.69]
13	58 [2.29]	61 [2.39]	N/A
15	64 [2.52]	67 [2.62]	58 [2.28]
16	64 [2.52]	67 [2.62]	59 [2.34]
53	48 [1.88]	51 [1.98]	42 [1.64]
66	54 [2.13]	57 [2.23]	48 [1.89]

WR Product Line

WR 255 and 256 Series Ordering Information

1 2 3 4 5 6 7 8

1. CHOOSE SERIES DESIGNATION

255	Standard Rotation	256	Reverse Rotation

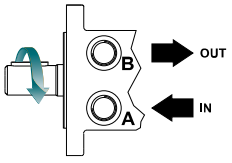

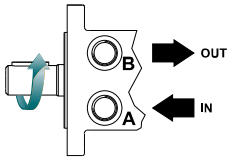

▶ The 255 & 256 series are bi-directional.

2. SELECT A DISPLACEMENT OPTION

040	40 cm^3/rev	[2.5 in^3/rev]	130	129 cm^3/rev	[7.9 in^3/rev]
050	50 cm^3/rev	[3.1 in^3/rev]	160	160 cm^3/rev	[9.8 in^3/rev]
060	59 cm^3/rev	[3.6 in^3/rev]	200	198 cm^3/rev	[12.1 in^3/rev]
070	71 cm^3/rev	[4.3 in^3/rev]	240	236 cm^3/rev	[14.4 in^3/rev]
080	79 cm^3/rev	[4.9 in^3/rev]	250	250 cm^3/rev	[15.3 in^3/rev]
090	88 cm^3/rev	[5.4 in^3/rev]	290	291 cm^3/rev	[17.8 in^3/rev]
100	100 cm^3/rev	[6.1 in^3/rev]	320	322 cm^3/rev	[19.6 in^3/rev]
115	113 cm^3/rev	[6.9 in^3/rev]	400	400 cm^3/rev	[24.4 in^3/rev]

3. SELECT A MOUNT & PORT OPTION

A10	2-Hole, SAE A Mount, Aligned Ports, 1/2-14 NPT
A11	2-Hole, SAE A Mount, Aligned Ports, 7/8-14 UNF
A12	2-Hole, SAE A Mount, Offset Ports, G 1/2
A13	2-Hole, SAE A Mount, Offset Manifold Ports, G 1/2
A1D	2-Hole, SAE A Mount, Offset Manifold Ports, 7/8-14 UNF
A19	2-Hole, SAE A Mount, Offset Ports, Valve Cavity 7/8-14 UNF
A30	4-Hole, Magneto Mount, Aligned Ports, 1/2-14 NPT
A31	4-Hole, Magneto Mount, Aligned Ports, 7/8-14 UNF
A33	4-Hole, Magneto Mount, Offset Manifold Ports, G 1/2
A3D	4-Hole, Magneto Mount, Offset Manifold Ports, 7/8-14 UNF
A62	2-Hole, SAE A Mount, Offset Ports, G 1/2 (TP)
A63	2-Hole, SAE A Mount, Offset Manifold Ports, G 1/2 (TP)
AC3	4-Hole, Magneto Mount, Offset Manifold Ports, G 1/2 (TP)
B11	2-Hole, SAE B Mount, Aligned Ports, 7/8-14 UNF
B18	2-Hole, SAE B Mount, Aligned Ports, G 1/2
F30	4-Hole, Square Mount, Aligned Ports, 1/2-14 NPT
F31	4-Hole, Square Mount, Aligned Ports, 7/8-14 UNF
F33	4-Hole, Square Mount, Offset Manifold Ports, G 1/2
F37	4-Hole, Square Mount, Aligned Manifold Ports, 1/2" Drilled

▶ (TP) - Tall pilot. Speed sensor option is not available on tall pilot housings.

3. SELECT A MOUNT & PORT OPTION

F38	4-Hole, Square Mount, Aligned Ports, G 1/2
F39	4-Hole, Square Mount, Offset Ports, Valve Cavity 7/8-14 UNF
F3D	4-Hole, Square Mount, Offset Manifold Ports, 7/8-14 UNF
G37	4-Hole, Square Mount, Aligned Manifold Ports, 1/2" Drilled
G38	4-Hole, Square Mount, Aligned Ports, G 1/2

4. SELECT A SHAFT OPTION

01	7/8" 13 Tooth Spline	12	25mm Straight
02	1" 6B Spline, 5/16-18 Tap	13	1" Tapered
04	1" 6B Spline, M8x1.25 Tap	15	1" Straight Extended
05	1" - 9.5 [.375] Pinhole	16	25mm Straight Extended
10	1" Straight 5/16-18 Tap	53	1" - 10.3 [.406] Pinhole
11	1" Straight M8x1.25 Tap	66	1" - 8.0 [.315] Pinhole

▶ The 15 & 16 extended shafts are designed for use with one of the speed sensor options listed in STEP 7.

5. SELECT A PAINT OPTION

A	Black
B	Black, Unpainted Mounting Surface

6. SELECT A VALVE CAVITY / CARTRIDGE OPTION

A	None	F	121 bar [1750 psi] Relief
B	Valve Cavity Only	G	138 bar [2000 psi] Relief
C	69 bar [1000 psi] Relief	J	173 bar [2500 psi] Relief
D	86 bar [1250 psi] Relief	L	207 bar [3000 psi] Relief
E	104 bar [1500 psi] Relief		

▶ Valve cavity is only available on the A19 & F39 housings.

7. SELECT AN ADD-ON OPTION

A	Standard
B	Lock Nut
C	Solid Hex Nut
W	Speed Sensor, Dual, 4-Pin Male Weatherpack Connector
X	Speed Sensor, Dual, 4-Pin M12 Male Connector
Y	Speed Sensor, Single, 3-Pin Male Weatherpack Connector
Z	Speed Sensor, Single, 4-Pin M12 Male Connector

8. SELECT A MISCELLANEOUS OPTION

AA	None
EG	Viton Shaft Seal

P109394

ENGINEERING
TOMORROW

Products we offer:

- DCV directional control valves
- Electric converters
- Electric machines
- Electric motors
- Gear motors
- Gear pumps
- Hydrostatic motors
- Hydrostatic pumps
- Orbital motors
- PLUS+1® controllers
- PLUS+1® displays
- PLUS+1® joysticks and pedals
- PLUS+1® operator interfaces
- PLUS+1® sensors
- PLUS+1® software
- PLUS+1® software services, support and training
- Position controls and sensors
- PVG proportional valves
- Steering components and systems
- Telematics

Danfoss Power Solutions is a global manufacturer and supplier of high-quality hydraulic and electric components. We specialize in providing state-of-the-art technology and solutions that excel in the harsh operating conditions of the mobile off-highway market as well as the marine sector. Building on our extensive applications expertise, we work closely with you to ensure exceptional performance for a broad range of applications. We help you and other customers around the world speed up system development, reduce costs and bring vehicles and vessels to market faster.

Danfoss Power Solutions – your strongest partner in mobile hydraulics and mobile electrification.

Go to www.danfoss.com for further product information.

We offer you expert worldwide support for ensuring the best possible solutions for outstanding performance. And with an extensive network of Global Service Partners, we also provide you with comprehensive global service for all of our components.

Hydro-Gear
www.hydro-gear.com

Daikin-Sauer-Danfoss
www.daikin-sauer-danfoss.com

Local address:

Danfoss
Power Solutions (US) Company
2800 East 13th Street
Ames, IA 50010, USA
Phone: +1 515 239 6000

Danfoss
Power Solutions GmbH & Co. OHG
Krokamp 35
D-24539 Neumünster, Germany
Phone: +49 4321 871 0

Danfoss
Power Solutions ApS
Nordborgvej 81
DK-6430 Nordborg, Denmark
Phone: +45 7488 2222

Danfoss
Power Solutions Trading (Shanghai) Co., Ltd.
Building #22, No. 1000 Jin Hai Rd
Jin Qiao, Pudong New District
Shanghai, China 201206
Phone: +86 21 2080 6201

Danfoss can accept no responsibility for possible errors in catalogues, brochures and other printed material. Danfoss reserves the right to alter its products without notice. This also applies to products already on order provided that such alterations can be made without subsequent changes being necessary in specifications already agreed.
All trademarks in this material are property of the respective companies. Danfoss and the Danfoss logotype are trademarks of Danfoss A/S. All rights reserved.

MIX7 - MIM7 Industrial pressure gauges

Can be used in corrosive gases and liquids that are not crystallizing

Accuracy Class 1

Wide varieties of pressure ranges, connection types and engineering units

Without or with dampening fluid

Bourdon tube stainless steel (MIX) or monel (MIM)

Conform to EN 837-1 standard

Approval Lloyd's Register

Gauges of the MIX series have been specifically designed to fulfil the requirements of aggressive environments and fluids.
Both internal and external parts are made in stainless steel.
Typical industries serviced by this type of gauges : Chemical, petroche mical, utilities, energy generation, metal transformation, food processing biotechnology, Nuclear.

Technical Data (20 °C)

Nominal size	150 mm	
Measurement range	**MIX**	1 ... 0 to 0 ... 1600 bar
	MIM	-1 ... 0 to 0 ... 600 bar
Working pressure (-1 ≤ P ≤ 600 bar)	Steady:	100% F.S.
	Fluctuating:	90% F.S.
	Short time:	130% F.S.
(P ≥ 1000 bar) only MIX	Steady:	75% F.S.
	Fluctuating:	60% F.S.
	Short time:	100% F.S.
Accuracy class	1	
Protection rating	IP 65 (EN 60529)	
Process connection		
Type	G1/4, 1/4NPT, G1/2, 1/2 NPT, M20x1.5	
Matière	**MIX** : St. steel 1.4404 (AISI 316L) **MIM** : Monel 400	
Case	St. steel 1.4301 (AISI 304) (Option 1.4404)	
Bezel ring	St. steel 1.4301 (AISI 304) (Option 1.4404)	
Bourdon tube	**MIX** : St. steel 1.4404 (AISI 316L) **MIM** : Monel 400	
Movement	St. steel	
Window	Instrument glass	
Window gasket	Elastomer	
Dial	Aluminium	
Pointer	Aluminium	
Temperature	Ambient	-20 ... +70 °C
	Process	-40 ... +200 °C (not filled)
	Process	-20 ... +70 °C (filled BH1)
	(The gauge temperature does not exceed +70 °C)	
	Storage	-40 ... +70 °C
	Drift	± 0.4% FS/10 °C
Safety	S1 Pressure gauge with blow-out device	

Options

Accuracy class	0.5	P > 1 bar	***Code 0843***
	0.6	P > 1 bar	***Code 0840***
Version Ex (ATEX II2 GDc-IM2c) (Included option code 0751)			***Code 0078***
Safety laminated glass in Triplex			***Code 0751***
Polycarbonate window			***Code 0753***
Blow out disc at the back			***Code 0760***
Oxygen application			***Code 0765***
Restrictor screw Ø 0.5			***Code 0771***
St. steel 1.4404 (AISI 316L) solid drawn Bourdon tube			***Code 0816***
Micro metric pointer (P ≥ 1.6 bar)			***Code 0678***
Friction pointer			***Code 0679***
Material certificate EN10204 3.1			***Code Q1229***
Calibration certificate EN837-1 (5 points raising and 5 points falling)			***Code Q1070***
Lloyd's Register approval			***Code 0827***

Baumer

Dimensions - Types of mounting

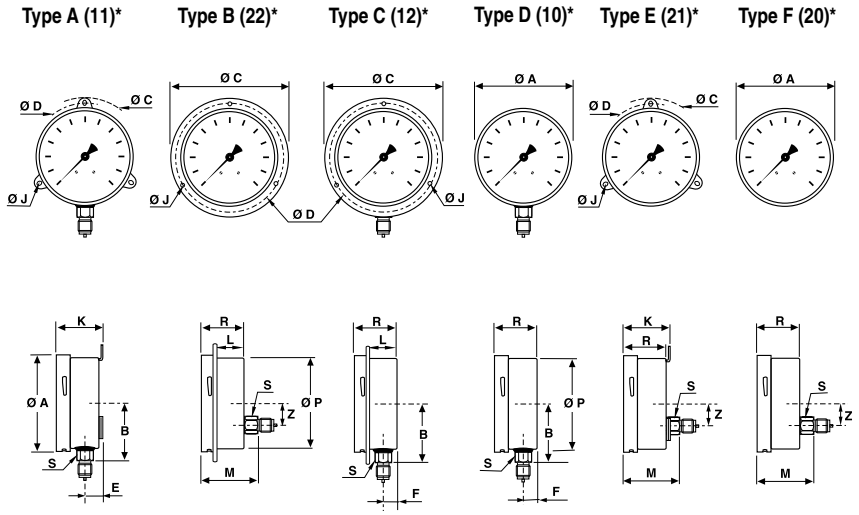

	[mm]
A	150.2
B	85
C	180
D	168
E	25.5
F	23.5
J	5.5
K	56.5
L	37.5
M	68.5
P	142
R	54.5
S	22
W	152
X	151
Y1	145
Y2	143
Z	31.5

	Weight in kg - type D	
Ø mm	Dry	Filled
150	0.880	1.700

(*according to EN837-1)

Ordering Details - MIX7 - MIM7

MIX7xxxxxx

Model	1´... 3´ digit
All Stainless steel Pressure Gauge	MIX
Pressure gauge with monel Bourdon tube (1)	MIM

Nominal size	4´ digit
150 mm	7

Type of mounting	5´ digit
Stainless steel case and bezel ring 1.4301 (standard)	
Bottom connection, 3 back lugs fixing	A
Back connection, front flange, 3 mounting holes	B
Bottom connection, front flange	C
Bottom connection	▸ **D**
Back connection, 3 back lugs fixing	E
Back connection	▸ **F**
Stainless steel case and bezel ring 1.4404 (AISI 316L)	
Bottom connection, 3 back lugs fixing	1
Back connection, front flange, 3 mounting holes	2
Bottom connection, front flange	3
Bottom connection	4
Back connection, 3 back lugs fixing	5
Back connection	6

Process connection	6´ digit
G1/4	2
G1/2	▸ **3**
1/4 NPT	5
1/2NPT	▸ **6**
M20x1.50	9

Liquid filling	7´digit
Dry	▸ **0**
BH1 (glycerin/water) (-20 ... +70°C)	1
BH2 (glycerin) (+10 ... +90°C) *(except 0.6 bar)*	2
BH3 (silicone) (-40 ... +100°C)	3
BH4 (silicone) (-60 ... +100°C)	4
BH5 (oxygen 160 bar max) (-15 ... +100°C)	5

Unit of measurement	8´ digit
bar	▸ **B**
kPa	▸ **D**
kg/cm²	▸ **F**
psi	▸ **H**

Pressure ranges	9´ ... 10´ digit
See table	xx

(▸ **Standard version)**

code	bar	kPa	code	Psi
58	-0.6+ 0	-60 + 0	58	
59	-1 + 0	-100 + 0	59	-30"Hg+ 0
72	-1 + 0.6	-100 + 60	73	-30"Hg+ 15
74	-1 + 1.5	-100 + 150	75	-30"Hg+ 30
76	-1 + 3	-100 + 300	2C	-30"Hg+ 60
77	-1 + 5	-100 + 500	78	-30"Hg+ 100
79	-1 + 9	-100 + 900	79	-30"Hg+ 150
81	-1 + 15	-100 + 1500	81	
82	-1 + 24	-100 + 2400	82	-30"Hg+ 300
11	0 + 0.4	0 + 40	11	0 + 6
12	0 + 0.6	0 + 60	13	0 + 10
15	0 + 1	0 + 100	15	0 + 15
16	0 + 1.6	0 + 160	1C	0 + 20
18	0 + 2.5	0 + 250	17	0 + 30
19	0 + 4	0 + 400	19	0 + 60
20	0 + 6	0 + 600	21	0 + 100
22	0 + 10	0 + 1000	22	0 + 160
24	0 + 16	0 + 1600	23	0 + 200
26	0 + 25	0 + 2500	25	0 + 300
27	0 + 40	0 + 4000	26	0 + 400
29	0 + 60	0 + 6000	27	0 + 600
31	0 + 100	0 + 10000	30	0 + 1000
33	0 + 160	0 + 16000	31	0 + 1500
35	0 + 250	0 + 25000	34	0 + 3000
38	0 + 400	0 + 40000	38	0 + 6000
39	0 + 600	0 + 60000	40	0 +10000
41	0 +1000	0 + 100000	41	0 +15000
42	0 +1600	0 + 160000	1D	0 +20000

(1) Monel version (MIM) is not available in codes 58, 41, 42, 1D

EN/2012-02-20 This data sheet may only be reproduced in full

zima
Jagenberg Group
Manufacture.Quality.Solutions.
Kusters Water Division

2.5 – DRIVE CAGE

zima
Jagenberg Group
Manufacture.Quality.Solutions.
Kusters Water Division

WOONSOCKET, RI - GRAVITY THICKENER MECHANISM

DRIVE CAGE

A Carbon Steel box, truss-style, all welded drive cage will be provided for bolt-up connection to the rotating turntable main gear assembly. The truss arms will be field-attached to the lower end of the drive cage by rigidly reinforced bolted connections.

For design purposes, all dead loads imposed by the rotating mechanism will be considered, plus the cantilevered moments of the truss arms, including a live load.

The cage will be constructed of Carbon Steel plate and structural members with a minimum of ¼” thickness, joined by welding per AWS.

Drive Cage Sectional Size:	3’ – 1” square
Drive Cage Design:	Box / truss type
Minimum Material Thickness:	1/4"
Drive Cage Material:	Carbon Steel

zima
Jagenberg Group
Manufacture.Quality.Solutions.
Kusters Water Division

2.6 – CENTER PIER

zima
Jagenberg Group
Manufacture.Quality.Solutions.
Kusters Water Division

WOONSOCKET, RI - GRAVITY THICKENER MECHANISM

CENTER PIER

A center pier will be supplied for mounting in the center of the basin. The pier will be designed of adequate strength to support the bridge, drive, and rotating mechanism, and to withstand the loads of mechanism operation.

Center Pier Diameter:	18”
Center Pier Wall Thickness:	1/4"
Center Pier Material:	Carbon Steel

zima
Jagenberg Group
Manufacture.Quality.Solutions.
Kusters Water Division

2.7 – ACCESS BRIDGE

zima
Jagenberg Group
Manufacture.Quality.Solutions.
Kusters Water Division

WOONSOCKET, RI - GRAVITY THICKENER MECHANISM

ACCESS BRIDGE

An access bridge with service platform will be provided for the thickener unit. The bridge will be supported by the tank wall and center drive.

The bridge body will be constructed from trusses and will be 3' wide and include a service platform.

Bridge Type:	Half Span – Beam Bridge
Bridge Walkway Width:	3'-0"
Bridge Material:	Carbon Steel, Prime Painted
Bridge Decking Material:	Aluminum Bar Grating, 1-1/4" deep
Platform Material:	Carbon Steel, Prime Painted
Platform Decking Material:	¼" Aluminum Checkered Plate
Platform Clearance:	18"

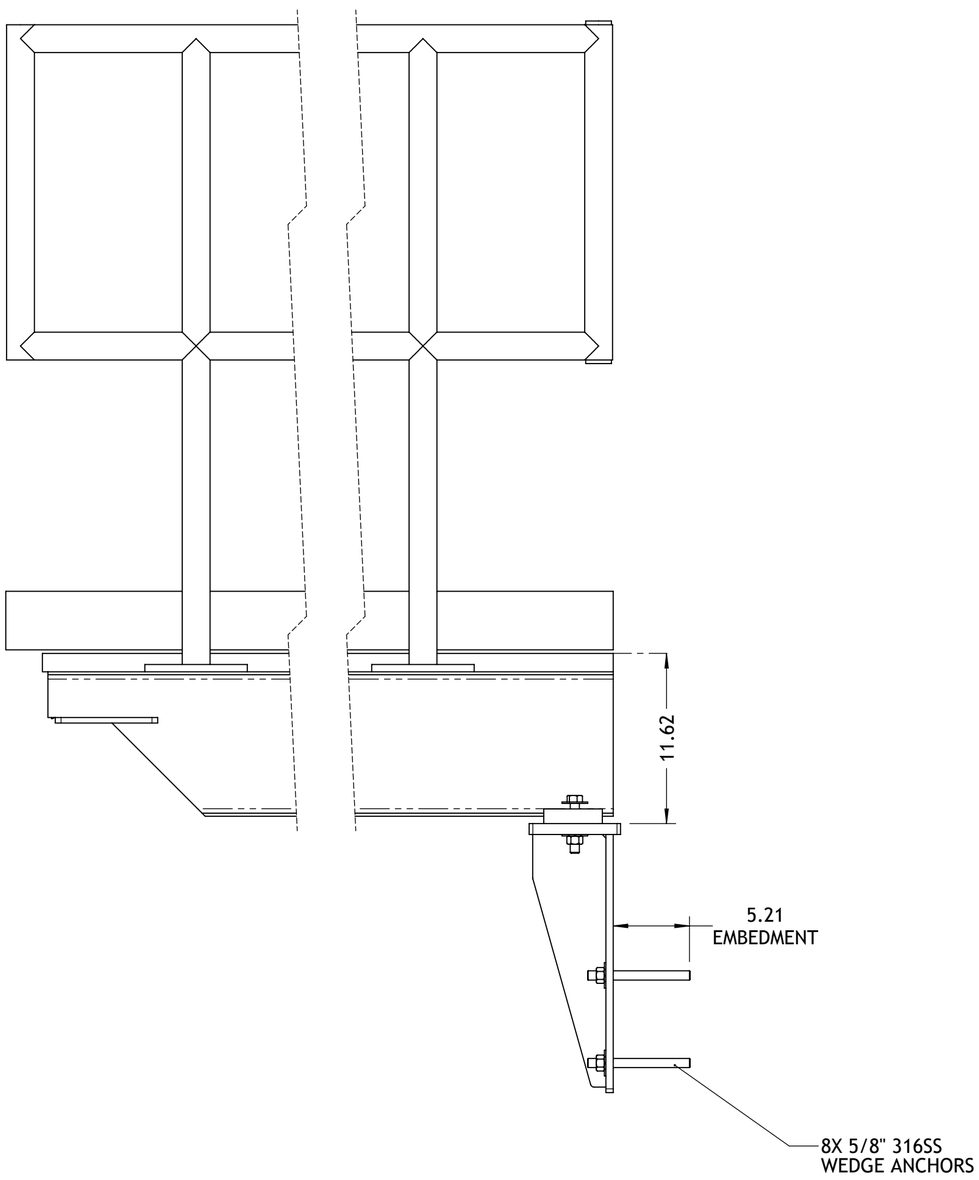

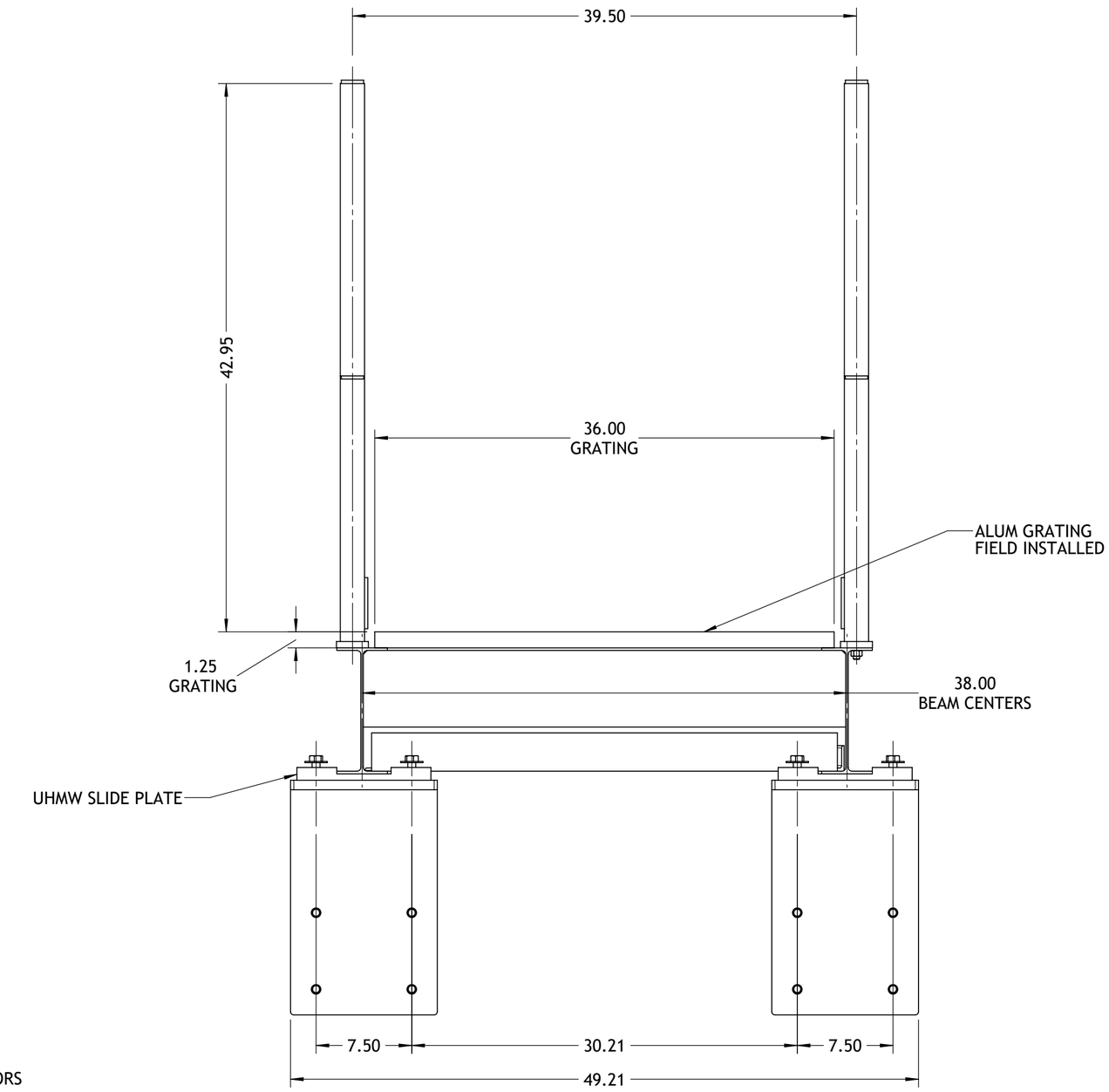

PROPRIETARY DOCUMENT:
NOTICE: THIS DOCUMENT CONTAINS PROPRIETARY INFORMATION WHICH IS THE PROPERTY OF ZIMA CORPORATION. REPRODUCTION, TRANSMITTAL OR USE FOR ANY PURPOSE OTHER THAN THE PROJECT OR PURPOSE FOR WHICH THE INFORMATION IS PROVIDED WITHOUT THE EXPRESS WRITTEN PERMISSION OF ZIMA CORPORATION IS PROHIBITED.

UNLESS OTHERWISE SPECIFIED
THIRD ANGLE PROJECTION
MODIFIED SURFACES: 3.2
DIMENSIONS ARE IN MILLIMETERS
TOLERANCES:
ANGULAR: MACH ± 0.1°
ANGULAR: BEND ± 1°
1 PLACE DECIMAL ± 0.8 MM
2 PLACE DECIMAL ± 0.25 MM
3 PLACE DECIMAL ± 0.100 MM

zima
Jagenberg Group

TITLE ASSY, BRIDGE

SCALE 1:8	WEIGHT: 1372.25 LBS. (EST)	SHEET 1 OF 1	MODEL NO. 87807-905	PARENT DRAWING
DRAWN EAN	CHECKED	DATE	SIZE C	DWG. NO. 87807-SM701	REV 0

SW-FilePath:C:\Vault\CLARIFIERS\87807 WOONSOCKET, RI\87807-SM701

Swage Locked Aluminum Grating

IKG
Forging Partnerships™

Type			
Standard Space	IB BS	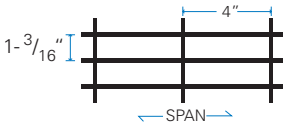	Recommended for general applications.
Standard Space	IF FS	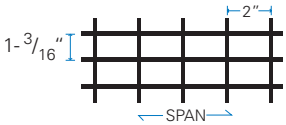	Same as IB and BS but with closer cross bar spacing.
Close Space	ID DS	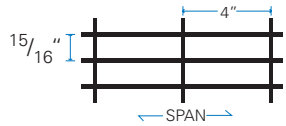	The close bearing bars provide a greater loading capacity than IB / BS without increasing the depth of the section.
Close Space	IDF DFS	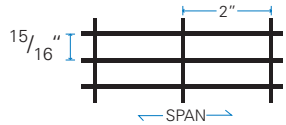	Same as ID and DS but with closer cross bar spacing.
Very Close Space	ICM4 ♿ SCM4	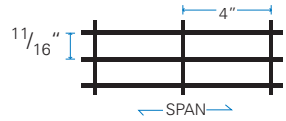	Our closest spaced swage lock grating. Satisfies maximum clear opening required by ADA.
Very Close Space	ICMF4 ♿ SCMF4	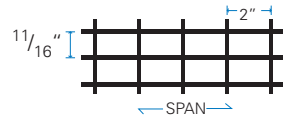	With closer cross bars and bearing bars. For conditions requiring greatly reduced net openings. Satisfies maximum clear opening required by ADA.

Rectangular Bar Grating
(BS, FS, DS, DFS, SCM4, SCMF4)

BS swaged rectangular bar grating provides all the strength of aluminum pressure locked grating at a slightly lower cost. The cross bars are swaged to lock the bearing bars in place, giving you high strength and rigidity in a light weight, virtually maintenance free aluminum grating.

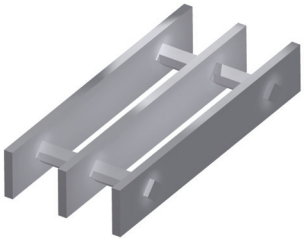

I-Bar Grating
(IB, IF, ID, IDF, ICM4, ICMF4)

IB swaged aluminum I-Bar grating is the lightest weight, lowest cost aluminum grating. Its high strength, slip resistant striated bearing bars and low cost, I-Bar grating is an excellent choice when economy is a major factor.

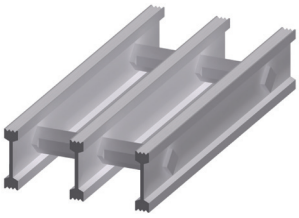

Weights lb./sf.														
Size	Bearing Bar Depth (inches)	Swage Locked "I Bar" Type						Bearing Bar Dimensions (inches)	Swage Locked "Rectangular Bar" Type					
		IB	IF	ID	IDF	ICM4	ICMF4		BS	FS	DS	DFS	SCM4	SCMF4
3	-	-	-	-	-	-	-	1″ x 1/8″	1.9	2.2	2.3	2.6	3.0	3.3
4	1″	1.9	2.1	2.3	2.5	3.2	3.5	1″ x 3/16″	2.6	2.9	3.3	3.5	4.3	4.6
5	-	-	-	-	-	-	-	1-1/4″ x 1/8″	2.5	2.8	2.8	3.1	3.6	4.0
6	1-1/4″	2.3	2.5	2.8	2.9	3.8	4.2	1-1/4″ x 3/16″	3.2	3.5	4.0	4.3	5.3	5.6
7	-	-	-	-	-	-	-	1-1/2″ x 1/8″	2.9	3.2	3.4	3.5	4.5	4.8
8	1-1/2″	2.6	2.8	3.2	3.4	4.5	4.8	1-1/2″ x 3/16″	3.9	4.3	4.8	5.2	6.3	6.6
9	1-3/4″	3.0	3.3	3.7	3.9	5.1	5.4	1-3/4″ x 3/16″	4.5	4.9	5.6	5.9	7.2	7.6
10	2″	3.4	3.7	4.2	4.4	5.8	6.1	2″ x 3/16″	5.1	5.5	6.3	6.7	8.2	8.6
11	2-1/4″	3.8	4.0	4.6	4.9	6.4	6.8	2-1/4″ x 3/16″	5.7	6.1	7.0	7.4	9.2	9.5
12	2-1/2″	4.0	4.2	4.9	5.1	7.1	7.4	2-1/2″ x 3/16″	6.3	6.7	7.8	8.1	10.2	10.5

Surfaces:
- Plain
- Serrated*
- MEBAC®

Finishes:
- Mill
- Anodized
- Duranodic

Panel sizes:
- 3´ x 20´ 2´ x 20´
- 3´ x 24´ 2´ x 24´

*Only rectangular bar is serrated. I-Bar type is striated on top surface.

Call us at **(800) 324-8417**

LOAD TABLE FOR SWAGE LOCKED GRATING

This table is good for type IB, BS, IF and FS only.

IKG Forging Partnerships™

* Maximum span for 1/4" deflection under uniform load of 100lb/sf.

Size	Bearing Bar Size	*		Span in inches												
				24	30	35	42	48	54	60	66	72	78	84	90	96
2	3/4" x 3/16"	35	U	355	227	158	116									
			D	0.191	0.299	0.432	0.588									
			C	355	284	237	203									
			D	0.153	0.239	0.345	0.470									
3	1" x 1/8"	39	U	421	269	187	137	105	83							
			D	0.144	0.225	0.324	0.441	0.576	0.729							
			C	421	337	281	241	211	187							
			D	0.115	0.180	0.259	0.353	0.461	0.583							
4	1" x 3/16" or 1" I Bar	44	U	632	404	281	206	158	125							
			D	0.144	0.225	0.324	0.441	0.576	0.729							
			C	632	505	421	361	316	281							
			D	0.115	0.180	0.259	0.353	0.461	0.583							
5	1-1/4" x 1/8"	47	U	658	421	292	215	164	130	105	87	73				
			D	0.115	0.180	0.259	0.353	0.461	0.583	0.72	0.871	0.037				
			C	658	526	439	376	329	292	263	239	219				
			D	0.092	0.144	0.207	0.282	0.369	0.467	0.576	0.697	0.829				
6	1-1/4" x 3/16" or 1-1/4" I Bar	52	U	987	632	439	322	247	195	158	130	110	93	81		
			D	0.115	0.180	0.259	0.353	0.461	0.583	0.720	0.871	0.037	1.217	1.411		
			C	987	789	658	564	493	439	395	359	329	304	282		
			D	0.092	0.144	0.207	0.282	0.369	0.467	0.576	0.697	0.829	0.973	1.129		
7	1-1/2" x 1/8"	53	U	947	606	421	309	237	187	152	125	105	90	77	67	59
			D	0.096	0.150	0.216	0.294	0.384	0.486	0.600	0.726	0.864	1.014	1.176	1.350	1.536
			C	947	758	632	541	474	421	379	344	316	291	271	253	237
			D	0.077	0.120	0.173	0.235	0.307	0.389	0.480	0.581	0.691	0.811	0.941	1.080	1.229
8	1-1/2" x 3/16" or 1-1/2" I Bar	59	U	1421	909	632	464	355	281	227	188	158	135	116	101	89
			D	0.096	0.150	0.216	0.294	0.384	0.486	0.600	0.726	0.864	1.014	1.176	1.35	1.536
			C	1421	1137	947	812	711	632	568	517	474	437	406	379	355
			D	0.077	0.120	0.173	0.235	0.307	0.389	0.480	0.581	0.691	0.811	0.941	1.080	1.229
9	1-3/4" x 3/16" or 1-3/4" I Bar	66	U	1934	1238	860	632	484	382	309	256	215	183	158	138	121
			D	0.082	0.129	0.185	0.252	0.329	0.417	0.514	0.622	0.741	0.869	1.008	1.157	1.317
			C	1934	1547	1289	1105	967	860	774	703	645	595	553	516	484
			D	0.066	0.103	0.148	0.202	0.263	0.333	0.411	0.498	0.592	0.695	0.806	0.926	1.053
10	2" x 3/16" or 2" I Bar	73	U	2526	1617	1123	825	632	499	404	334	281	239	206	180	158
			D	0.072	0.113	0.162	0.221	0.288	0.365	0.450	0.545	0.648	0.761	0.882	1.013	1.152
			C	2526	2021	1684	144	1263	1123	1011	919	842	777	722	674	632
			D	0.058	0.090	0.130	0.176	0.230	0.292	0.360	0.436	0.518	0.608	0.706	0.810	0.922
11	2-1/4" x 3/16" or 2-1/4" I Bar	80	U	3197	2046	1421	1044	799	632	512	423	335	303	261	277	200
			D	0.064	0.100	0.144	0.196	0.256	0.324	0.400	0.484	0.576	0.676	0.784	0.900	1.024
			C	3197	2558	2132	1827	1599	1421	1279	1163	1066	984	914	853	799
			D	0.051	0.080	0.115	0.157	0.205	0.259	0.320	0.387	0.461	0.541	0.627	0.720	0.819
12	2-1/2" x 3/16" or 2-1/2" I BAR	87	U	3947	2526	1754	1289	987	780	632	522	439	374	322	281	247
			D	0.058	0.090	0.130	0.176	0.23	0.292	0.360	0.436	0.518	0.608	0.706	0.810	0.922
			C	3947	3158	2632	2256	1974	1754	1579	1435	1316	1215	1128	1053	987
			D	0.046	0.072	0.104	0.141	0.184	0.233	0.288	0.348	0.415	0.487	0.564	0.648	0.737

U = Uniform load lb./sf. C = Concentrated load lb./ft. of grating widht, at mid-span. D = Deflection in inches.

ALUMINUM CONVERSION FACTORS				
For spacings other than 1- 3/16" centers, multiply the conversion factor times the U and C values shown in the table, the D (deflection) remains as shown.				
Type	ID / DS	IDF / DFS	ICM4 / SCM4	ICMF4 / SCMF4
Factor	1.27	1.27	1.73	1.73

Note: The carrying capacity of a piece of grating subjected to a concentrated load over only a portion of its width is determined by the stiffness of both the bearing bars and the cross bars, and therefore differs with the type of grating used. To determine the carrying capacity of gratings subject to such loadings, the IKG engineering department should be consulted.

zima
Jagenberg Group

Manufacture.Quality.Solutions.

Kusters Water Division

2.8 – HANDRAIL

zima
Jagenberg Group
Manufacture.Quality.Solutions.
Kusters Water Division

WOONSOCKET, RI - GRAVITY THICKENER MECHANISM

HANDRAIL SYSTEM

A mechanical 2-rail handrail system will be supplied around the drive unit. The system will include rail mounts, connectors, and other hardware needed for installation.

The following sheets are standard manufacturer cut sheets for this mechanical system.

Handrail Type:	2-Rail Aluminum posts and rails, 1-1/2" round midrail, 4" kick-plate
Handrail Material:	Aluminum
Toeboard Material:	Aluminum

PEAK TO PEAK
ENGINEERED RAILINGS

June 21, 2020

RE: Mechanical Handrail System Certification Letter

To Whom It May Concern:

This letter is to certify that this railing system has been specifically designed by a qualified professional engineer to meet or exceed the requirements set forth in the 2018 International Building Code (IBC 2018), ASCE 7-10, and OSHA safety requirements. The design has been subject to independent peer review and has been proven to utilize industry standard techniques within acceptable engineering standards. This system must be installed per the approved Peak to Peak shop drawings in order to meet or exceed the aforementioned safety and material design requirements.

Sincerely,

Chris Manlove

Chris Manlove, PE
Lead Design Engineer
Peak to Peak Engineered Railings, LLC

Sales Office: 720-508-3819 | Fax: 720-409-3843
3000 Youngfield Street | Wheat Ridge, CO | 80215

PEAK TO PEAK
ENGINEERED RAILINGS

August 28, 2019

Re: Aluminum Pipe Alloy for Peak to Peak Engineered Railings Systems

Peak to Peak Engineered Railings uses as a standard an Aluminum Alloy 6005A-T61 for its 1-1/2" Sch. 40 Aluminum Pipe in lieu of 6061-T6, 6063-T6 and 6105-T5 for the reasons as follows:

1. **6005A-T61 has a minimum ultimate tensile strength of 38 ksi, compared to 6063-T6 which has a minimum ultimate tensile strength of 30 ksi. 6061-T6 and 6105-T5 has the same 38 ksi ultimate tensile strength.**

2. **6005A-T61 has a minimum yield tensile strength of 35 ksi, compared to 6063-T6 which has a minimum yield tensile strength of 25 ksi. 6061-T6 and 6105-T5 has the same yield tensile strength.**

3. **The standard clear anodizing of 6005A-T61 alloy is near perfect match in finish to our 535 alloy of all of our fittings as compared to the anodized finish of the 6061-T6, 6105-T5 and 6063-T6 alloy. This in turn creates a more esthetic appearance to our railing.**

We feel that the use of 6005A-T61 alloy in place of the 6061-T6, 6105-T5 and 6063-T6 alloy provides increased strength and a more esthetic appearance, which in turn provides a quality product to your customer.

If you have any questions, please give me a call at (720)-508-3819

Sincerely,

Kyle Cochran
Operation Manager

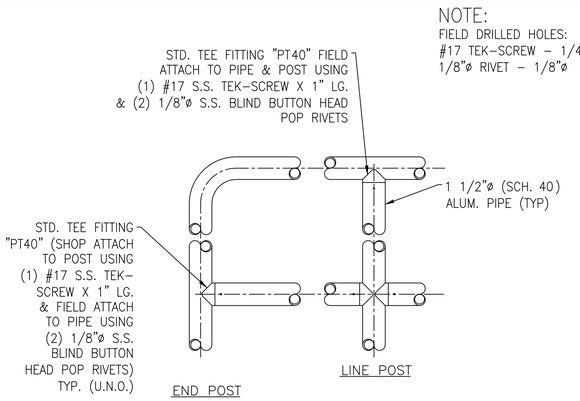

TYPICAL LEVEL RAIL CONNECTIONS

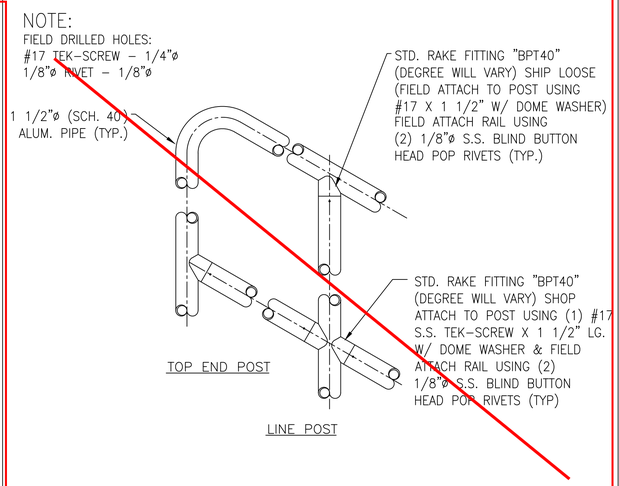

TYPICAL SLOPED RAIL CONNECTIONS

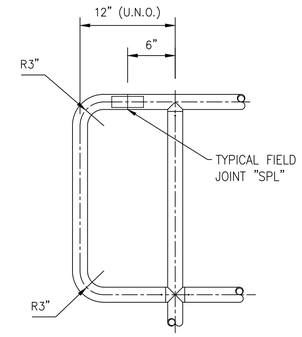

LEVEL P-END SUB-ASSEMBLE

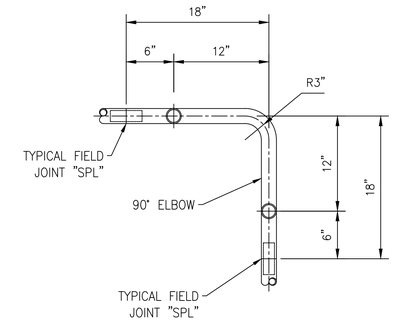

TYPICAL CORNER SUB-ASSEMBLE

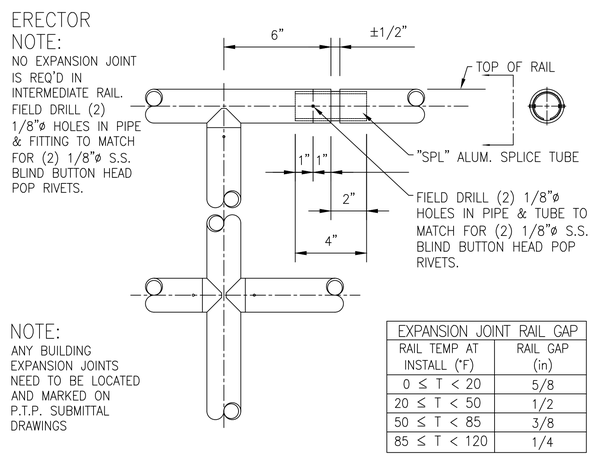

EXPANSION JOINT RAIL GAP	
RAIL TEMP AT INSTALL (°F)	RAIL GAP (in)
0 ≤ T < 20	5/8
20 ≤ T < 50	1/2
50 ≤ T < 85	3/8
85 ≤ T < 120	1/4

TYPICAL EXPANSION JOINT

(LOCATED AT BUILDING EXPANSION JOINT & AT 24'-0" MAX. O/C)

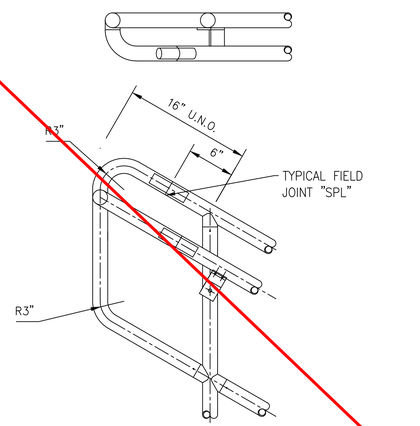

TOP RAKE P-END SUB-ASSEMBLE

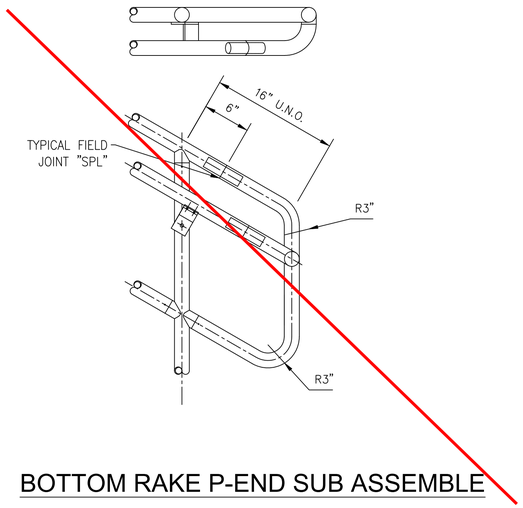

BOTTOM RAKE P-END SUB ASSEMBLE

GENERAL NOTES

1. ALL RAIL IS TO BE OF MECHANICAL CONSTRUCTION U.N.O.
2. ALL RAILS ARE TO BE FABRICATED FROM 1 1/2"ø (SCH. 40) ALUMINUM PIPE (6005A–T61 ALLOY) (U.N.O.)
3. ALL POSTS ARE TO BE FABRICATED FROM 1 1/2"ø (SCH. 40) ALUMINUM PIPE (6005A–T61 ALLOY) (U.N.O.)
4. ALL EXTRUDED COMPONENTS ARE 6005A–T61 ALLOY, CAST COMPONENTS ARE 535 ALLOY
5. ALL FASTENERS (SELF TAPPING SCREWS, MACHINE BOLTS, ADHESIVE ANCHORS, ETC.) TO BE 304 STAINLESS STEEL
6. ALL RAILING SURFACES IN CONTACT WITH CONCRETE OR DISSIMILAR METALS SHALL RECEIVE ONE 1/16" THICK NEOPRENE GASKET (SHIPPED LOOSE FOR FIELD ATTACHMENT)
7. ALL BOLTS, NUTS AND FLAT WASHERS USED TO MOUNT RAILINGS TO FLOORS, WALLS, STEEL, ETC. ARE BY PTP ENGINEERED RAILINGS
8. ALL KICK PLATES ("FKP" OR "SKP) SHALL BE SHIPPED LOOSE IN 24'–0" LG. STOCK LENGTHS FOR FIELD CUTTING & DRILLING AS NEEDED
9. ALL POSTS ARE TO BE FURNISHED CUT TO LENGTH WITH FITTINGS & MOUNTING PLATES ATTACHED OR SHIPPED LOOSE PER THEIR SPECIFIC DETAILS
10. PIPE FOR STRAIGHT RAIL IS FURNISHED IN 24'–0" STOCK LENGTHS FOR CUTTING & DRILLING AS NEEDED
11. PIPE FOR CURVED RAIL IS FURNISHED SUB–ASSEMBLED IN 21'–0" (MAX). ROLLED LENGTHS FOR FIELD CUTTING & DRILLING AS NEEDED
    ** ALL RADII MUST BE VERIFIED PRIOR TO FABRICATION **
12. ALL CURVED RAIL SHALL BE FABRICATED USING CURVED TOP AND INTERMEDIATE RAILS
13. BENDS WITH A 3" C/L RADIUS ARE FURNISHED AS NEEDED & MUST BE FIELD CUT FOR FIELD CONDITIONS
14. ALL RAIL WHEN PROPERLY INSTALLED SHALL MEET OR EXCEED OSHA REQUIREMENTS.
15. MAX. POST SPACING TO BE 6'–0" C/C
16. ALL RAIL IS TO BE FINISHED IN ACCORDANCE WITH THE ALUMINUM ASSOCIATION'S DESIGNATION M10C22A41 OR M12C22A41
17. PIPE FOR CANTILEVER RAILING WILL SHIP LOOSE IN 24–0" STOCK LENGTHS FOR FIELD CUTTING AND DRILLING AS NEEDED
18. ALL DIMENSIONS SHOWN THROUGHOUT THIS SET ARE APPROXIMATE AND SHALL BE FIELD VERIFIED BEFORE FABRICATION AND INSTALLATION

%% = SEE ERECTION DRAWINGS FOR PART NUMBER

RIVET SYSTEM SUB-ASSEMBLED

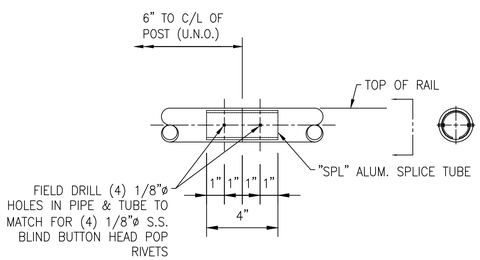

ERECTOR NOTE:
FIELD JOINT AT INTERMEDIATE RAIL IS LOCATED IN THE FITTING. FIELD DRILL (2) 1/8"ø HOLES IN PIPE AND FITTING TO MATCH FOR (2) 1/8"ø S.S. BLIND BUTTON HEAD POP RIVETS.

TYPICAL FIELD JOINT

(LOCATED AS NEEDED FOR STRUCTURAL STABILITY)

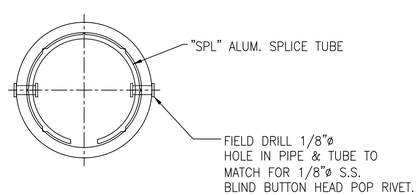

EXPANSION JOINT & FIELD SPLICE

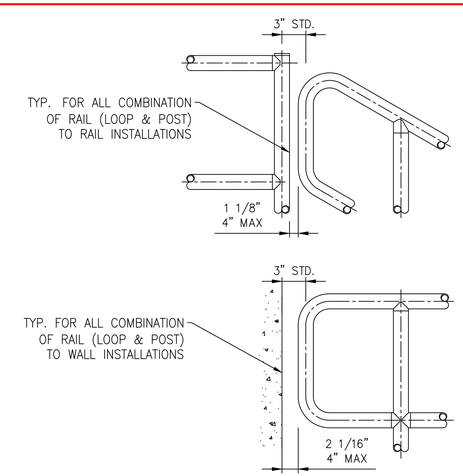

STD. RAILING OFFSETS

REV	DESCRIPTION	DATE
1	SUBMITTAL	9/19/2017

PEAK to PEAK ENGINEERED RAILINGS
3000 YOUNGFIELD ST. SUITE 275 WHEAT RIDGE, CO 80215
Ph. (720)508-3819 FAX (720)409-3843

NOTICE TO CONTRACTOR AND ERECTOR:
BACK CHARGES FOR CORRECTIVE WORK OR REPLACEMENT MATERIALS WILL NOT BE ACCEPTED UNLESS AUTHORIZED BY PEAK TO PEAK ENGINEERED RAILINGS, INC. BEFORE SUCH COSTS ARE INCURRED

STANDARD DETAILS
CITY, ST
ALUMINUM HANDRAIL - RIVET SYSTEM - SUB-ASSEMBLED

DESIGNER	DESIGNER	CUSTOMER	CUSTOMER		DWG TITLE	STANDARD DETAILS	
CUSTOMER JOB #	XXXX-XX	PRINT DATE	11/30/2018	ISSUE DATE	11/30/2018	CONTRACT NO	DRAWING NO.
DETAILED BY	INT	CHECKER	INT	SCALE	NTS	XXX-XXX	SD-1

zima
Jagenberg Group
Manufacture.Quality.Solutions.
Kusters Water Division

2.9 – TRUSS ARMS & SQUEEGEES

zima
Jagenberg Group
Manufacture.Quality.Solutions.
Kusters Water Division

WOONSOCKET, RI - GRAVITY THICKENER MECHANISM

TRUSS ARMS & SQUEEGEES

Two truss arms will be supplied for the thickener unit. The truss arms will be constructed as triangular trusses fabricated from carbon steel and will be designed to handle the torsional loading and to maintain adequate rigidity for the sludge scraping application.

The lower edge of the truss arms will feature angled rake arms with adjustable squeegees for directing the settled solids to the sludge sump.

Number of Truss Arms:	2
Truss Arm Design:	Triangular Lattice
Truss Arm Material:	Carbon Steel
Vertical Sludge Pickets:	Carbon Steel
Vertical Sludge Pickets:	24” Spacing
Squeegee Material:	Stainless Steel

zima
Jagenberg Group
Manufacture.Quality.Solutions.
Kusters Water Division

2.10 – INFLUENT WELL

zima
Jagenberg Group
Manufacture.Quality.Solutions.
Kusters Water Division

WOONSOCKET, RI - GRAVITY THICKENER MECHANISM

INFLUENT WELL

A properly sized influent well will be provided in the center of the basin to receive and distribute the influent.

The well will be fabricated from carbon steel plate, and will be designed to maintain the well's shape and rigidity.

The well will be supported via structural components that are adequately sized and positioned to satisfy all shear and deflection requirements.

It will have stiffening members (if required) and will feature ports for egress of process fluid as per design requirements.

Well Diameter:	9'-0"
Well Depth:	5'-0"
Influent Well Material Thickness:	¼"
Influent Well Material:	Carbon Steel

zima
Jagenberg Group
Manufacture.Quality.Solutions.
Kusters Water Division

2.11 – SURFACE SKIMMER AND SCUM TROUGH

zima
Jagenberg Group
Manufacture.Quality.Solutions.
Kusters Water Division

WOONSOCKET, RI - GRAVITY THICKENER MECHANISM

SURFACE SKIMMER & SCUM TROUGH

The thickener will be supplied with a mechanical skimming device designed to move floating surface scum to a fabricated steel collection trough located at the tank periphery. Each assembly will consist of a scum trough with outlet nozzle, an approach ramp, flared containment baffles, and integral scum baffle section.

The skimmer head will be spring-loaded to ensure full contact with the scum ramp during the skimming operation.

An auto-flush valve will be included, which actuates to flush the scum out during each pass of the skimmer.

Scum trough support brackets, leveling angles and anchor bolts will be supplied for attachment.

Skimmer Arms & Support Material:	Carbon Steel
Skimmer Wiper Blade Material:	Fabric-reinforced neoprene
Skimmer Hardware:	316 Stainless Steel
Scum Trough Dimensions:	6’-0” min. width
Trough Material:	Carbon Steel
Trough Material Thickness:	1/4"
Hardware & Anchors:	316 Stainless Steel

zima
Jagenberg Group
Manufacture.Quality.Solutions.
Kusters Water Division

2.12 – SURFACE PREPARATION & COATINGS

zima
Jagenberg Group
Manufacture.Quality.Solutions.
Kusters Water Division

WOONSOCKET, RI - GRAVITY THICKENER MECHANISM

SURFACE PREPARATION & COATINGS

NON-SUBMERGED COMPONENTS:
Preparation: SSPC-SP-6
1st Coat: Tnemec Series 66 (3-5 mils) DFT
2nd Coat: Tnemec Series 66 (3-5 mils) DFT

SUBMERGED COMPONENTS:
Preparation: SSPC-SP-10
1st Coat: Tnemec Series 66 (3-5 mils) DFT
2nd Coat: Tnemec Series 66 (3-5 mils) DFT

THICKENER DRIVE COAT:

Factory Finish Painted

Unless specified otherwise, stainless steel components will be supplied unpainted.

Vendor-supplied components such as motors, gear reducers, switches, etc. will be supplied with the manufacturer's standard corrosion-resistant coatings.

HI-BUILD EPOXOLINE® SERIES 66HS

PRODUCT PROFILE

GENERIC DESCRIPTION Polyamide Epoxy

COMMON USAGE A high-solids, low VOC, pure polyamide epoxy that offers exceptional protection to a variety of substrates in atmospheric and immersion environments. Applied as a primer, intermediate, or topcoat, this versatile coating also accepts a wide-range of finish coats, allowing for a coating system tailored to specific exposure conditions.

COLORS Refer to Tnemec Color Guide. **Note:** Epoxies chalk with extended exposure to sunlight and may yellow on aging. Lack of ventilation, incomplete mixing, miscatalyzation or the use of heaters that emit carbon dioxide and carbon monoxide during application and initial stages of curing may accelerate any potential yellowing. **Note:** Special color bases are recommended for immersion service. Contact your Tnemec representative for more information.

FINISH Satin

COATING SYSTEM

SURFACER/FILLER/PATCHER 215, 217, 218

PRIMERS **Steel:** Self-priming or Series 1, 20HS, FC20HS, 27, 27WB, 90-97, 90-98, 90E-92, 90G-1K97, 91-H_2O, 94-H_2O, 394, V530, 161HS
Concrete: Self-priming, 20HS, FC20HS, 161HS
CMU: Self-priming, 130, 1254

TOPCOATS 46H-413, 27WB, 30, 66HS, 72, 73, 104, 113, 114, 115, 141, 161HS, 290, 291, 1026, 1028, 1029, 1070, 1070V, 1071, 1071V, 1072, 1072V, 1074, 1074U, 1075, 1075U, 1080, 1081. Refer to COLORS on applicable topcoat data sheets for additional information. **Note:** When topcoating Series 66HS, the following maximum recoat times apply: with itself, 46H-413, 27WB, 104, 113, 114, 141, 161HS, 290, 291, 1028, 1029, 1070, 1070V, 1071, 1071V, 1072, 1072V, 1080 and 1081, 60 days; with 72, 73, 1074, 1074U, 1075 and 1075U, 90 days. Scarify the Series 66HS surface before topcoating if maximum recoat time has elapsed.

SURFACE PREPARATION

PRIMED STEEL **Immersion Service:** Scarify the epoxy prime coat surface by abrasive-blasting with a fine abrasive before topcoating if more than 60 days has elapsed since initial application.

STEEL **Immersion Service:** SSPC-SP10/NACE 2 Near-White Blast Cleaning with a minimum angular anchor profile of 1.5 mils.
Non-Immersion Service: SSPC-SP6/NACE 3 Commercial Blast Cleaning with a minimum angular anchor profile of 1.5 mils.

CAST/DUCTILE IRON Contact your Tnemec representative or Tnemec Technical Services.

CONCRETE Allow new concrete to cure 28 days. For optimum results and/or immersion service, abrasive blast referencing SSPC-SP13/NACE 6 Surface Preparation of Concrete and Tnemec's Surface Preparation and Application Guide.

CMU Allow mortar to cure for 28 days. Prepare in accordance with SSPC-SP13/NACE 6 to level protrusions and mortar spatter and remove other contaminants.

PAINTED SURFACES **Non-Immersion Service:** Ask your Tnemec representative for specific recommendations.

ALL SURFACES Must be clean, dry and free of oil, grease and other contaminants.

TECHNICAL DATA

VOLUME SOLIDS 78% ± 2.0% (mixed) †

RECOMMENDED DFT 2.0 to 10.0 mils (50 to 254 microns) per coat.
Note: Number of coats and thickness requirements will vary with substrate, application method and exposure. Contact your Tnemec representative.

CURING TIME

Temperature	To Touch	To Handle	To Recoat	Immersion
95°F (35°C)	1 hour	3 hours	6-7 hours	7 days
75°F (24°C)	2 hours	8 hours	12-16 hours	7 days
55°F (13°C)	4 hours	22-24 hours	30-34 hours	12-14 days

Curing time varies with surface temperature, air movement, humidity and film thickness. **Note:** For faster curing and low temperature applications, add No. 44-705 Epoxy Accelerator, see separate product data sheet for cure information.
Ventilation: When used as a tank lining or in enclosed areas, provide adequate ventilation during application and cure.

VOLATILE ORGANIC COMPOUNDS **Unthinned:** 1.54 lbs/gallon (184 grams/litre)
Thinned 10% (No. 4 Thinner): 2.02 lbs/gallon (243 grams/litre)
Thinned 20% (No. 4 Thinner): 2.43 lbs/gallon (292 grams/litre)

HAPS **Unthinned:** 1.17 lbs/gal solids
Thinned 10% (No. 4 Thinner): 1.88 lbs/gal solids
Thinned 20% (No. 4 Thinner): 2.60 lbs/gal solids

THEORETICAL COVERAGE 1,249 mil sq ft/gal (30.7 m^2/L at 25 microns). See APPLICATION for coverage rates. †

NUMBER OF COMPONENTS Two: Part A (epoxy) and Part B (polyamide)

MIXING RATIO One (Part A) to one (Part B) by volume.

© August 8, 2017 by Tnemec Company Inc.

Published technical data and instructions are subject to change without notice. The online catalog at www.tnemec.com should be referenced for the most current technical data and instructions or you may contact your Tnemec representative for current technical data and instructions.

HI-BUILD EPOXOLINE® | SERIES 66HS

PACKAGING

	Part A	Part B	Yield (mixed)
Large Kit	6 gallon pail (partially filled)	5 gallon pail	10 gallons (37.9 L)
Small Kit	1 gallon can	1 gallon can	2 gallons (7.57 L)

NET WEIGHT PER GALLON 13.11 lbs ± 0.25 lbs (5.95 ± .11 kg) (mixed) †

STORAGE TEMPERATURE Minimum 20°F (-7°C) Maximum 110°F (43°C)

TEMPERATURE RESISTANCE (Dry) Continuous 250°F (121°C) Intermittent 275°F (135°C)

SHELF LIFE Part A: 24 months; Part B: 24 months at recommended storage temperature.

FLASH POINT - SETA Part A: 85°F (29°C) Part B: 105°F (41°C)

HEALTH & SAFETY Paint products contain chemical ingredients which are considered hazardous. Read container label warning and Material Safety Data Sheet for important health and safety information prior to the use of this product.
Keep out of the reach of children.

APPLICATION

COVERAGE RATES

	Dry Mils (Microns)	Wet Mils (Microns)	Sq Ft/Gal (m²/Gal)
Suggested	5.0 (125)	6.5 (165)	250 (23.2)
Minimum	2.0 (50)	2.5 (65)	626 (58.1)
Maximum	10.0 (254)	13.0 (330)	125 (11.6)

Note: Roller or brush application may require two or more coats to obtain recommended film thickness. Allow for overspray and surface irregularities. Film thickness is rounded to the nearest 0.5 mil or 5 microns. Application of coating below minimum or above maximum recommended dry film thicknesses may adversely affect coating performance. †

MIXING Power mix contents of each container, making sure no pigment remains on the bottom. Pour a measured amount of Part B into a clean container large enough to hold both components. Add an equal volume of Part A to Part B while under agitation. Continue agitation until the two components are thoroughly mixed. If using Series 44-705 accelerator, slowly add three (3) fluid ounces per gallon of the Series 66HS material while under agitation. **Note:** The use of more than the recommended amount of 44-705 will adversely affect performance.

Thin by volume and thoroughly mix. Failure to thoroughly mix the Part A and Part B components prior to thinning can affect product's gloss and performance. Do not use mixed material beyond pot life limits. **Note:** For applications between 50°F to 60°F (10°C to 16°C), allow mixed material to stand thirty (30) minutes and restir before using. To avoid this induction time, both components should be above 60°F (16°C) prior to mixing. Mixing ratio is one to one by volume.

THINNING For air, airless spray, roller or brush applications thin up to 10% with No. 4 Thinner. For a finer finish, thin up to 20% with No. 4 Thinner.

POT LIFE & SPRAY LIFE

10% Thinning

Temperature	Pot Life	Spray Life
55°F (13°C)	4 hours	1.5 hours
75°F (24°C)	2.5 hours	1.5 hours
95°F (35°C)	2 hours	75 minutes

20% Thinning

Temperature	Pot Life	Spray Life
55°F (13°C)	5 hours	2 hours
75°F (24°C)	4 hours	2 hours
95°F (35°C)	3 hours	1.5 hours

APPLICATION EQUIPMENT

Air Spray

Gun	Fluid Tip	Air Cap	Air Hose ID	Mat'l Hose ID	Atomizing Pressure	Pot Pressure
DeVilbiss JGA	E	765 or 704	5/16" or 3/8" (7.9 or 9.5 mm)	3/8" or 1/2" (9.5 or 12.7 mm)	50-80 psi (3.4-5.5 bar)	20-25 psi (1.4-1.7 bar)

Low temperatures or longer hoses require higher pot pressure.

Airless Spray

Tip Orifice	Atomizing Pressure	Mat'l Hose ID	Manifold Filter
0.015"-0.021" (380-530 microns)	3000-4500 psi (207-310 bar)	3/8" or 1/2" (9.5 or 12.7 mm)	60 mesh (250 microns)

Use appropriate tip/atomizing pressure for equipment, applicator technique and weather conditions.
Note: A minimum pump size of 45:1 is required for proper airless spray application.
Roller: Use 3/8" or 1/2" (9.5 mm to 12.7 mm) high quality synthetic woven nap covers.
Brush: Recommended for small areas only. Use high quality natural or synthetic bristle brushes.

SURFACE TEMPERATURE Minimum 50°F (10°C) Maximum 135°F (57°C)
The surface should be dry and at least 5°F (3°C) above the dew point. Coating will not cure below minimum surface temperature.

CLEANUP Flush and clean all equipment immediately after use with No. 4 thinner or MEK.

† Values may vary with color.

© August 8, 2017 by Tnemec Company Inc.

zima
Jagenberg Group
Manufacture.Quality.Solutions.
Kusters Water Division

2.13 – ANCHOR BOLTS & ASSEMBLY HARDWARE

zima
Jagenberg Group
Manufacture.Quality.Solutions.
Kusters Water Division

WOONSOCKET, RI - GRAVITY THICKENER MECHANISM

ASSEMBLY FASTENERS

Unless specified otherwise, all anchors, fasteners and hardware will be **316 stainless steel.**

Vendor-supplied components such as motors, gear reducers, switches, etc. will be supplied with the manufacturer's standard equipment fasteners.

zima
Jagenberg Group

Manufacture.Quality.Solutions.

Kusters Water Division

2.14 – CUSTOMER SERVICE

zima
Jagenberg Group
Manufacture.Quality.Solutions.
Kusters Water Division

WOONSOCKET, RI - GRAVITY THICKENER MECHANISM

CUSTOMER SERVICE

Site services for installation inspection, start-up and operator training are included in accordance with the project specifications.

Two (2) trips and (3) days of services are included.

For spare parts and customer service, please contact:

Tonya Robinson
Aftermarket Parts Manager
Zima Corporation
Spartanburg, South Carolina USA
Ph: 864-576-0660
tonya.robinson@zimacorp.com

For field service, please contact:
service@zimacorp.com

zima
Jagenberg Group
Manufacture.Quality.Solutions.
Kusters Water Division

2.15 – CONTROL PANELS

DATA SHEET

ZIMA CORP. CONTROL PANEL **DATE:** July 19, 2023

PROJECT NAME: CLARIFIER PANEL WOONSTOCK, RI. **PROJECT NO:** 23-436

HORSEPOWER: 2 **VOLTAGE:** 460 **PHASE:** 3 **TYPE:** SIMPLEX

QTY	ITEM	MFG	MODEL #
	ENCLOSURE & ACCESSORIES		
1	ENCLOSURE	HOFFMAN	A-24H2010SSLP3PT
1	SUBPANEL	HOFFMAN	A-24P20
	MAIN POWER COMPONENTS		
1	MAIN CIRCUIT BREAKER	SQUARE D	BDL36015
1	OPERATION MECHANISM	SQUARE D	9421-LB7
1	OPERATION SHAFT	SQUARE D	9421-LS8
1	OPERATION HANDLE	SQUARE D	9421-LC46
1	CIRCUIT BREAKER	C3 CONTROLS	1100-CB3D2D70
1	NEMA CONTACTOR	SQUARE D	8502-SBO2V02S
1	NEMA OVERLOAD	SQUARE D	9065-SFC20
1	MS AUXILLARY CONTACT	SQUARE D	9999-SX7
1	TRANSFORMER	SQUARE D	9070T250D1
1	PRIMARY BREAKER	C3 CONTROLS	1100-CB2D2D20
1	SECONDARY BREAKER	C3 CONTROLS	1100-CB1D2D30
	SWITCHES & INDICATORS		
1	OFF-ON SELECTOR SWITCH	SQUARE D	9001-SKS11B
1	CONTACT BLOCKS (N.O.)	SQUARE D	9001-KA2
2	CONTACT BLOCKS (N.C.)	SQUARE D	9001-KA3
1	PUSH BUTTON	SQUARE D	9001-SKR1U
1	GREEN INDICATOR LIGHT	SQUARE D	9001-SKT38LG
1	AMBER INDICATOR LIGHT	SQUARE D	9001-SKT38LY
1	RED INDICATOR LIGHT	SQUARE D	9001-SKT38LR
1	GREEN LENS	SQUARE D	9001-G31
1	AMBER LENS	SQUARE D	9001-A31
1	RED LENS	SQUARE D	9001-R31
	RELAYS & MISC COMPONENTS		
3	CONTROL RELAYS	SQUARE D	RXM4AB2F7
3	RELAY BASES	IDEC	SY4S-05
1	GROUND BAR	SQUARE D	PK9GTA
1	GROUND LUG	BURNDY	KA2U
15	TERMINAL BLOCKS	ENTRELEC	ZS6
	ALARM COMPONENTS		
1	HORN	EDWARDS	870P-N5
1	ALARM LIGHT	INGRAM	R40-XLS-40
1	SILENCE BUTTON	SQUARE D	9001-SKR1U
1	CONTACT BLOCK (N.O.)	SQUARE D	9001-KA2
	LABELS		
1	TYPE 5	QCI	CLARIFIER OFF ON
1	TYPE 5	QCI	RUNNING
1	TYPE 5	QCI	HIGH TORQUE
1	TYPE 5	QCI	OVER TORQUE
1	TYPE 5	QCI	COMMON ALARM RESET
1	TYPE 5	QCI	SILENCE
1	TYPE 1	QCI	MAIN

USE 75° C COPPER WIRE ONLY
TORQUE PER BREAKER RATING
44.25IN. LBS 14–4 AWG
79.66 IN. LBS. 3–3/0 AWG

15A MAIN CIRCUIT BREAKER
W/ INTERLOCKING DOOR
HANDLE

480/3/60

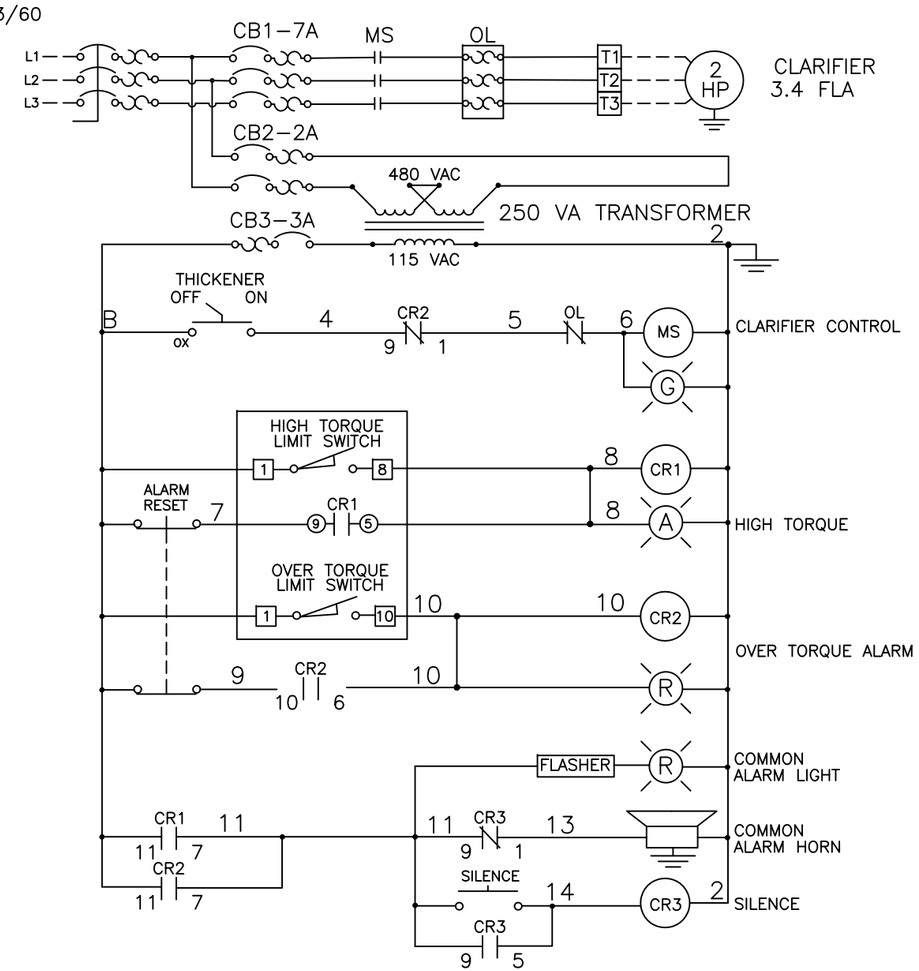

ALARM CONTACTS

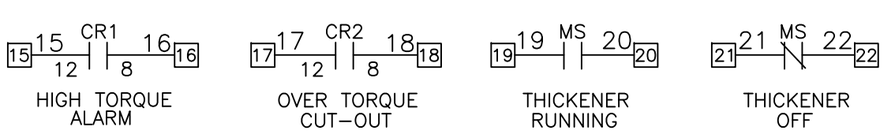

FIELD CONNECTIONS

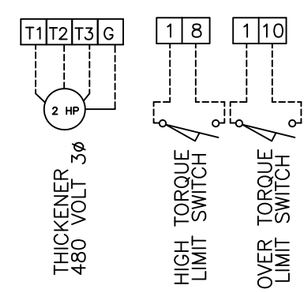

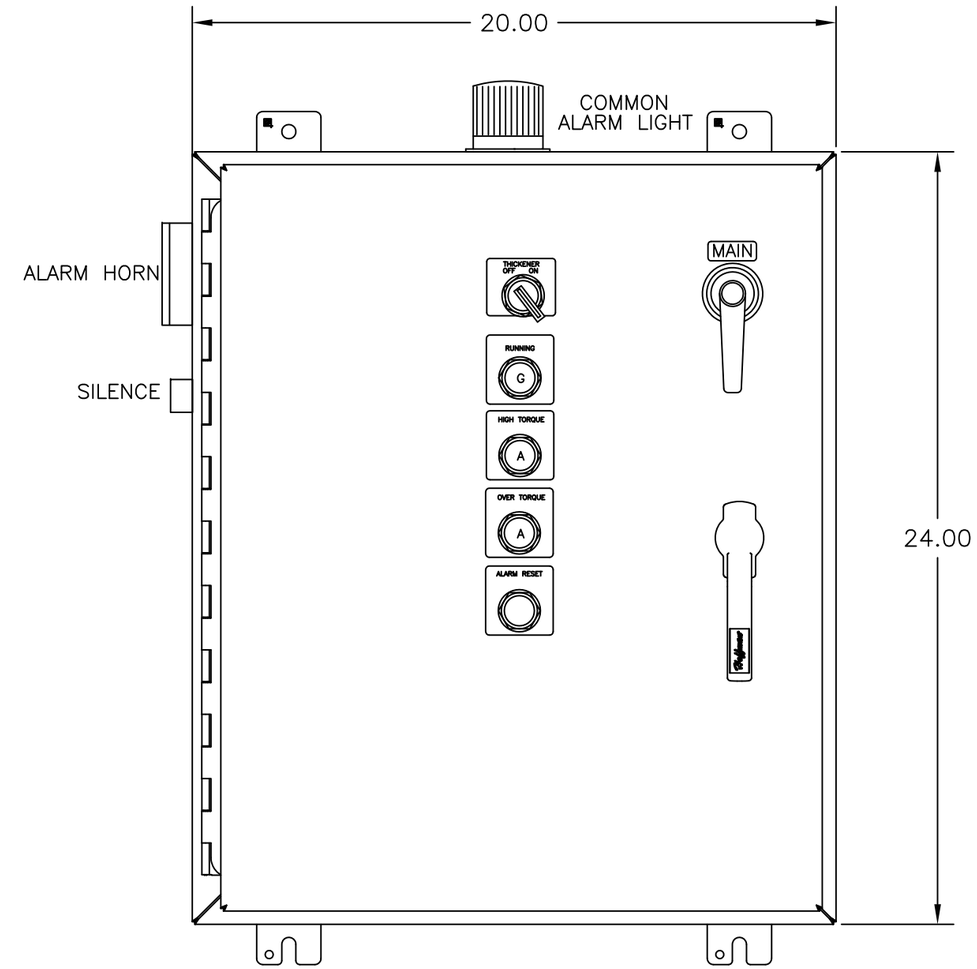

TYPE 4X STAINLESS STEEL ENCLOSURE

AS BUILT

PANEL TO BEAR
UL508A LABEL

UL LISTED CONTROL PANEL

TORQUE FIELD CONNECTIONS
SQUARE D 9080–GR6 TO 18–20 IN–LBS
SQUARE D 9080–GM6 TO 7–8 IN–LBS
SQUARE D 9080–GC6 TO 32–35 IN–LBS
ENTRELEC ZS6 7.52 IN–LBS +/– 1.33
CONNECTRON NDN111 32 IN/LB MAX
WIRING WILL BE 600VAC 75°C NON TINNED COPPER
WIRE POWER CIRCUITS & GROUNDS 14 AWG
WARNING MORE THAN ONE DISCONNECT MAY BE
REQUIRED TO DE–ENERGIZE EQUIPMENT BEFORE SERVICING

REV.	ITEM	DATE	BY

CLIENT

ORDER No.

PROPRIETARY DOCUMENT
This document, the information which it contains, and the know–how depicted are the property of Kusters Corporation and may not be used in any manner detrimental to the Corporation's interest. Reproduction in whole or in part may not be made without written permission from Kusters Corporation; and if made, shall bear or refer to this notice.

KUSTERS ZIMA
CORPORATION
Spartanburg SC USA

DRN. BY	BR	7/19/2023
CH'D BY	XXX	X–XX–XXXX
SHEET	1 OF 1	

TITLE
WOONSTOCK, RI.
CLARIFIER CONTROL PANEL

DWG.NO. E23436–1

SCALE

REV. X

CONTINUOUS HINGE WITH 3-POINT LATCH, TYPE 4X

INDUSTRY STANDARDS

UL 508A Listed; Type 3R, 4, 4X, 12; File No. E61997
cUL Listed per CSA C22.2 No 94; Type 3R, 4, 4X, 12; File No. E61997

NEMA/EEMAC Type 3R, 4, 4X, 12, 13
IEC 60529, IP66
Meets NEMA Type 3RX requirements

APPLICATION

These enclosures feature Hoffman's exclusive POWERGLIDE Handle with 3-point latching, ideal for indoor or outdoor applications that require corrosion protection, convenient access, and padlocking security.

SPECIFICATIONS

- 14 gauge Type 304 or 316L stainless steel bodies and doors
- Seams continuously welded and ground smooth
- Seamless foam-in-place gasket
- Rolled lip around three sides of door
- Internal 3-point latch and Type 316L stainless steel padlocking POWERGLIDE Handle
- Remove door by pulling stainless steel continuous hinge pin
- Data pocket is high-impact thermoplastic
- Collar studs provided for mounting optional panels
- Exterior hardware on Type 316L stainless steel enclosures matches enclosure material
- Bonding provision on door; grounding stud on body

FINISH

Door, sides, top and bottom have smooth #4 brushed finish. Handle is electropolished.

ACCESSORIES

Panels for Type 3R, 4, 4X, 12 and 13 Enclosures
Steel and Stainless Steel Window Kits
H2OMIT Vent Drains, Type 4X
H2OMIT Thermoelectric Dehumidifier

MODIFICATION AND CUSTOMIZATION

Hoffman excels at modifying and customizing products to your specifications. Contact your local Hoffman sales office or distributor for complete information.

BULLETIN: A4SW3

Standard Product

Catalog Number	AxBxC in./mm	Stainless Steel Type	Steel Panel	Conductive Panel	Stainless Steel Panel	Panel Size D x E in./mm	Data Pocket
A24H2006SSLP3PT	24.00 x 20.00 x 6.00 610 x 508 x 152	304	A24P20	A24P20G	A24P20SS6	21.00 x 17.00 533 x 432	Small
A24H2006SS6LP3PT	24.00 x 20.00 x 6.00 610 x 508 x 152	316L	A24P20	A24P20G	A24P20SS6	21.00 x 17.00 533 x 432	Small
A24H2008SSLP3PT	24.00 x 20.00 x 8.00 610 x 508 x 203	304	A24P20	A24P20G	A24P20SS6	21.00 x 17.00 533 x 432	Small
A24H2008SS6LP3PT	24.00 x 20.00 x 8.00 610 x 508 x 203	316L	A24P20	A24P20G	A24P20SS6	21.00 x 17.00 533 x 432	Small
A24H2408SSLP3PT	24.00 x 24.00 x 8.00 610 x 610 x 203	304	A24P24	A24P24G	A24P24SS6	21.00 x 21.00 533 x 533	Small
A24H2408SS6LP3PT	24.00 x 24.00 x 8.00 610 x 610 x 203	316L	A24P24	A24P24G	A24P24SS6	21.00 x 21.00 533 x 533	Small
A30H2408SSLP3PT	30.00 x 24.00 x 8.00 762 x 610 x 203	304	A30P24	A30P24G	A30P24SS6	27.00 x 21.00 686 x 533	Large
A30H2408SS6LP3PT	30.00 x 24.00 x 8.00 762 x 610 x 203	316L	A30P24	A30P24G	A30P24SS6	27.00 x 21.00 686 x 533	Large
A30H3008SSLP3PT	30.00 x 30.00 x 8.00 762 x 762 x 203	304	A30P30	A30P30G	A30P30SS6	27.00 x 27.00 686 x 686	Large
A30H3008SS6LP3PT	30.00 x 30.00 x 8.00 762 x 762 x 203	316L	A30P30	A30P30G	A30P30SS6	27.00 x 27.00 686 x 686	Large
A36H2408SSLP3PT	36.00 x 24.00 x 8.00 914 x 610 x 203	304	A36P24	A36P24G	A36P24SS6	33.00 x 21.00 838 x 533	Large
A36H2408SS6LP3PT	36.00 x 24.00 x 8.00 914 x 610 x 203	316L	A36P24	A36P24G	A36P24SS6	33.00 x 21.00 838 x 533	Large
A36H3008SSLP3PT	36.00 x 30.00 x 8.00 914 x 762 x 203	304	A36P30	A36P30G	A36P30SS6	33.00 x 27.00 838 x 686	Large
A36H3008SS6LP3PT	36.00 x 30.00 x 8.00 914 x 762 x 203	316L	A36P30	A36P30G	A36P30SS6	33.00 x 27.00 838 x 686	Large
A48H3608SSLP3PT	48.00 x 36.00 x 8.00 1219 x 914 x 203	304	A48P36	A48P36G	A48P36SS6	45.00 x 33.00 1143 x 838	Large
A48H3608SS6LP3PT	48.00 x 36.00 x 8.00 1219 x 914 x 203	316L	A48P36	A48P36G	A48P36SS6	45.00 x 33.00 1143 x 838	Large
A24H2010SSLP3PT	24.00 x 20.00 x 10.00 610 x 508 x 254	304	A24P20	A24P20G	A24P20SS6	21.00 x 17.00 533 x 432	Small

Catalog Number	AxBxC in./mm	Stainless Steel Type	Steel Panel	Conductive Panel	Stainless Steel Panel	Panel Size D x E in./mm	Data Pocket
A24H2010SS6LP3PT	24.00 x 20.00 x 10.00 610 x 508 x 254	316L	A24P20	A24P20G	A24P20SS6	21.00 x 17.00 533 x 432	Small
A36H3010SSLP3PT	36.00 x 30.00 x 10.00 914 x 762 x 254	304	A36P30	A36P30G	A36P30SS6	33.00 x 27.00 838 x 686	Large
A36H3010SS6LP3PT	36.00 x 30.00 x 10.00 914 x 762 x 254	316L	A36P30	A36P30G	A36P30SS6	33.00 x 27.00 838 x 686	Large
A42H3010SSLP3PT	42.00 x 30.00 x 10.00 1067 x 762 x 254	304	A42P30	A42P30G	A42P30SS6	39.00 x 27.00 991 x 686	Large
A48H3610SSLP3PT	48.00 x 36.00 x 10.00 1219 x 914 x 254	304	A48P36	A48P36G	A48P36SS6	45.00 x 33.00 1143 x 838	Large
A48H3610SS6LP3PT	48.00 x 36.00 x 10.00 1219 x 914 x 254	316L	A48P36	A48P36G	A48P36SS6	45.00 x 33.00 1143 x 838	Large
A24H2412SSLP3PT	24.00 x 24.00 x 12.00 610 x 610 x 305	304	A24P24	A24P24G	A24P24SS6	21.00 x 21.00 533 x 533	Small
A24H2412SS6LP3PT	24.00 x 24.00 x 12.00 610 x 610 x 305	316L	A24P24	A24P24G	A24P24SS6	21.00 x 21.00 533 x 533	Small
A30H2412SSLP3PT	30.00 x 24.00 x 12.00 760 x 610 x 305	304	A30P24	A30P24G	A30P24SS6	27.00 x 21.00 686 x 533	Large
A30H2412SS6LP3PT	30.00 x 24.00 x 12.00 762 x 610 x 305	316L	A30P24	A30P24G	A30P24SS6	27.00 x 21.00 686 x 533	Large
A36H3012SSLP3PT	36.00 x 30.00 x 12.00 914 x 762 x 305	304	A36P30	A36P30G	A36P30SS6	33.00 X 27.00 838 x 686	Large
A36H3012SS6LP3PT	36.00 x 30.00 x 12.00 914 x 762 x 305	316L	A36P30	A36P30G	A36P30SS6	33.00 X 27.00 838 x 686	Large
A36H3612SSLP3PT	36.00 x 36.00 x 12.00 914 x 914 x 305	304	A36P36	A36P36G	A36P36SS6	33.00 x 33.00 838 x 838	Large
A36H3612SS6LP3PT	36.00 x 36.00 x 12.00 914 x 914 x 305	316L	A36P36	A36P36G	A36P36SS6	33.00 x 33.00 838 x 838	Large
A42H3612SSLP3PT	42.00 x 36.00 x 12.00 1067 x 914 x 305	304	A42P36	A42P36G	A42P36SS6	39.00 x 33.00 991 x 838	Large
A48H3612SSLP3PT	48.00 x 36.00 x 12.00 1219 x 914 x 305	304	A48P36	A48P36G	A48P36SS6	45.00 x 33.00 1143 x 838	Large
A48H3612SS6LP3PT	48.00 x 36.00 x 12.00 1219 x 914 x 305	316L	A48P36	A48P36G	A48P36SS6	45.00 x 33.00 1143 x 838	Large
A60H3612SSLP3PT	60.00 x 36.00 x 12.00 1524 x 914 x 305	304	A60P36	A60P36G	A60P36SS6	57.00 x 33.00 1448 x 838	Large
A60H3612SS6LP3PT	60.00 x 36.00 x 12.00 1524 x 914 x 305	316L	A60P36	A60P36G	A60P36SS6	57.00 x 33.00 1448 x 838	Large
A48H3616SSLP3PT	48.00 x 36.00 x 16.00 1219 x 914 x 406	304	A48P36	A48P36G	A48P36SS6	45.00 x 33.00 1143 x 838	Large
A48H3616SS6LP3PT	48.00 x 36.00 x 16.00 1219 x 914 x 406	316L	A48P36	A48P36G	A48P36SS6	45.00 x 33.00 1143 x 838	Large
A60H3616SSLP3PT	60.00 x 36.00 x 16.00 1524 x 914 x 406	304	A60P36	A60P36G	A60P36SS6	57.00 x 33.00 1448 x 838	Large
A60H3616SS6LP3PT	60.00 x 36.00 x 16.00 1524 x 914 x 406	316L	A60P36	A60P36G	A60P36SS6	57.00 x 33.00 1448 x 838	Large

Purchase panels separately. Optional stainless steel, composite and aluminum panels are available for most sizes.

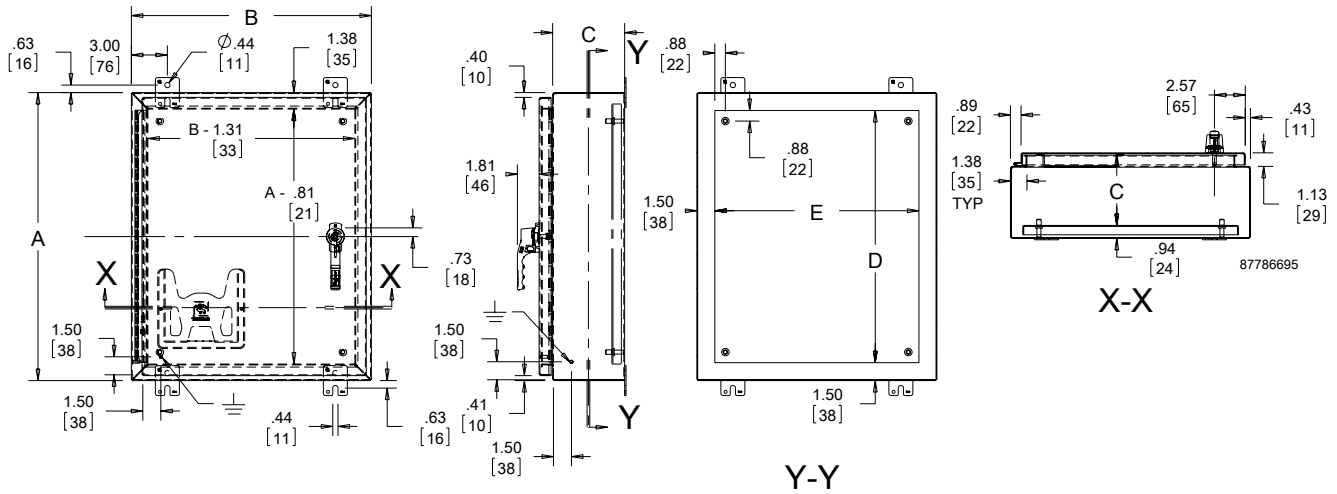

Product data sheet
Characteristics

BDL36015
PowerPact - circuit breaker - 15A 3P AC 18kA at 480/440 (UL) - EverLink lug

Product availability : Stock - Normally stocked in distribution facility

Main

Range	PowerPact
Product name	PowerPact B
Device short name	BD 015
Product or component type	Circuit breaker
Device application	Distribution

Complementary

Line Rated Current	15 A
Number of Poles	3P
Protected poles description	3t
Control type	Toggle
Breaking capacity code	D
Breaking capacity	25 kA at 240 V AC 50/60 Hz according to UL 489 18 kA at 480 V AC 50/60 Hz according to UL 489 Icu: 25 kA at 220...240 V AC 50/60 Hz according to IEC 60947-2 Icu: 18 kA at 380...415 V AC 50/60 Hz according to IEC 60947-2 Icu: 18 kA at 440 V AC 50/60 Hz according to IEC 60947-2 Icu: 14 kA at 500...525 V AC 50/60 Hz according to IEC 60947-2 18 kA at 480Y/277 V AC 50/60 Hz according to UL 489 14 kA at 600Y/347 V AC 50/60 Hz according to UL 489 25 kA at 208Y/120 V AC 50/60 Hz according to UL 489
System Voltage	600Y/347 V AC 50/60 Hz according to UL 489 500/525 V AC 50/60 Hz according to IEC 60947-2
[Ics] rated service breaking capacity	25 kA: at 220...240 V AC 50/60 Hz according to IEC 60947-2 18 kA: at 380...415 V AC 50/60 Hz according to IEC 60947-2 18 kA: at 440 V AC 50/60 Hz according to IEC 60947-2 14 kA: at 500...525 V AC 50/60 Hz according to IEC 60947-2
[Uimp] rated impulse withstand voltage	8 kV according to IEC 60947-2
[Ui] rated insulation voltage	800 V according to IEC 60947-2

Disclaimer: This documentation is not intended as a substitute for and is not to be used for determining suitability or reliability of these products for specific user applications

Trip unit technology	Thermal-magnetic
Trip unit name	TM-D
Suitability for isolation	Yes according to IEC 60947-2
Utilisation category	Category A
Mechanical durability	20000 cycles according to IEC 947-1 Annex K ed 5.2
Electrical durability	10000 cycles according to IEC 947-1 Annex K ed 5.2 In at 440 V
Connection pitch	1.06 in (27 mm)
Local signalling	Green flag presence of auxiliary contacts
Mounting mode	By screws plate Clip-on 35 x 15 mm symmetrical DIN rail
Electrical connection	Everlink lug at line Everlink lug at load
AWG gauge	AWG 6...AWG 2/0 fine stranded (aluminium/copper) AWG 14...AWG 3/0 rigid or stranded (aluminium/copper)
Tightening torque	44.25 lbf.in (5 N.m) 0...0.02 in² (2.5...16 mm²) (AWG 14...AWG 4) 79.65 lbf.in (9 N.m) 0.04...0.15 in² (25...95 mm²) (AWG 3...AWG 3/0)
Number of slots	1 auxiliary switch OF (plug-in) 1 voltage release MN or MX (plug-in) 1 alarm switch SD (plug-in)
Power wire stripping length	0.79 in (20 mm)
Color	Grey (RAL 7016)
9 mm pitches	9
Height	5.39 in (137 mm)
Width	3.19 in (81 mm)
Depth	3.15 in (80 mm)
Product weight	2.37 lb(US) (1.074 kg)
Quantity per set	Set of 1
Continuous current rating	80 %

Environment

Quality labels	CE
Standards	EN/IEC 60947-2 EN/IEC 60947-5-1 GB 14048.2 NEMA AB1 UL 489 CSA C22.2 No 5 NMX J-266
Product certifications	UL CSA CCC EAC NOM IEC
IP degree of protection	IP40 (front cover) according to IEC 60529
IK degree of protection	IK07 according to IEC 62262
Pollution degree	3 according to IEC 60947-1
Ambient air temperature for operation	-13...158 °F (-25...70 °C)
Ambient air temperature for storage	-58...185 °F (-50...85 °C)
Operating altitude	5000 m with derating 6561.68 ft (2000 m) without derating

Ordering and shipping details

Category	01130 - BD UNIT MOUNT BREAKER/SWITCH
Discount Schedule	DE2
GTIN	003606481152954
Nbr. of units in pkg.	1

Product data sheet
Characteristics

9421LB7
Door mount operating mechanism only, PowerPact B

Main

Range of product	9421L
Product or component type	Operating Mechanism
Circuit breaker name	PowerPact B

Ordering and shipping details

Category	21731 - 9421 L & MISC
Discount Schedule	CP1
GTIN	00785901093480
Nbr. of units in pkg.	1
Package weight(Lbs)	1.74
Returnability	Y
Country of origin	MX

Offer Sustainability

RoHS (date code: YYWW)	Compliant - since 1545 - Schneider Electric declaration of conformity Schneider-Electric declaration of conformity
California proposition 65	WARNING: This product can expose you to chemicals including:
- - - - - - - Substance 1	Lead and lead compounds, which is known to the State of California to cause cancer and birth defects or other reproductive harm.
- - - - - - - More information	For more information go to www.p65warnings.ca.gov

Product Life Status : Commercialised

The information provided in this documentation contains general descriptions and/or technical characteristics of the performance of the products contained herein.
This documentation is not intended as a substitute for and is not to be used for determining suitability or reliability of these products for specific user applications.
It is the duty of any such user or integrator to perform the appropriate and complete risk analysis, evaluation and testing of the products with respect to the relevant specific application or use thereof.
Neither Schneider Electric Industries SAS nor any of its affiliates or subsidiaries shall be responsible or liable for misuse of the information contained herein. *Prices are indicative

Product data sheet
Characteristics

9421LS8
OPERATING MECHANISM STANDARD SHAFT NEMA

Main

Commercial Status	Commercialised
Range of product	9421L
Product or component type	Shaft
Product destination	All 9421L operating mechanisms
Shaft type	Standard

Ordering and shipping details

Category	21731 - 9421 L & MISC
Discount Schedule	CP1
GTIN	00785901830184
Nbr. of units in pkg.	1
Package weight(Lbs)	0.60
Returnability	Y
Country of origin	MX

Offer Sustainability

Sustainable offer status	Not Green Premium product
RoHS	Will be Compliant on 3Q2014
REACh	Reference not containing SVHC above the threshold

Contractual warranty

Period	18 months

The information provided in this documentation contains general descriptions and/or technical characteristics of the performance of the products contained herein.
This documentation is not intended as a substitute for and is not to be used for determining suitability or reliability of these products for specific user applications.
It is the duty of any such user or integrator to perform the appropriate and complete risk analysis, evaluation and testing of the products with respect to the relevant specific application or use thereof.
Neither Schneider Electric Industries SAS nor any of its affiliates or subsidiaries shall be responsible or liable for misuse of the information contained herein. *Prices are indicative

Product data sheet
Characteristics

9421LC46
OPERATING MECHANISM HANDLE NEMA +OPTIONS

Product availability : Stock - Normally stocked in distribution facility

Main

Product	Handle Assembly

Complementary

Enclosure Type	NEMA 1/3R/4/4X/12 enclosure
For Use With	9421LG7, LF1, LK1, LJ7 or LL1 operating mechanism
Handle Length	152.40 mm (6 in)
Handle Finish	Chrome plated

Ordering and shipping details

Category	21731 - 9421 L & MISC
Discount Schedule	CP1
GTIN	00785901830344
Package weight(Lbs)	1.06 kg (2.34 lb(US))
Returnability	Yes
Country of origin	MX

Offer Sustainability

California proposition 65	WARNING: This product can expose you to chemicals including: Lead and lead compounds which is known to the State of California to cause Carcinogen & Reproductive harm. For more information go to www.p65warnings.ca.gov
REACh Regulation	REACh Declaration
REACh free of SVHC	Yes
EU RoHS Directive	Compliant EU RoHS Declaration
Mercury free	Yes
RoHS exemption information	Yes

Disclaimer: This documentation is not intended as a substitute for and is not to be used for determining suitability or reliability of these products for specific user applications

China RoHS Regulation	China RoHS declaration Product out of China RoHS scope. Substance declaration for your information.

Contractual warranty

Warranty	18 months

IT'S EASY TO BUILD YOUR OWN CIRCUIT BREAKER

Simply pick the code number from each of the sections below and combine them to build your part number.

Miniature Circuit Breakers
UL 489 Branch Circuit Breakers

1100 – CB ____ ____ **2** ____
I II III IV V VI

NEW

Example: To build one of our most popular UL 489 Miniature Circuit Breakers, the part number would be 1100 + CB + III + IV + 2 + VI or 1100-CB1C2U10

I. PRODUCT TYPE

CODE	DESCRIPTION
1100	Series 1100 Miniature Circuit Breaker

II. DEVICE TYPE

CODE	DESCRIPTION
CB	UL 489 Circuit Breaker

III. NUMBER OF POLES

CODE	DESCRIPTION	LIST
1	Single Pole	$ 58.00
1N	Single Pole + Neutral*	$116.00
2	Two Pole	$116.00
3	Three Pole	$174.00
3N	Three Pole + Neutral*	$232.00

*NOTE: Options with Neutral Poles coming soon.

IV. TRIP CHARACTERISTICS

CODE	DESCRIPTION
C	Trip Curve C
D	Trip Curve D

V. FRAME SIZE

CODE	DESCRIPTION
2	17.5mm Frame per Pole

VI. OPERATING CURRENT

CODE	DESCRIPTION
C50	0.5A
D10	1.0A
D16	1.6A
D20	2.0A
D30	3.0A
D40	4.0A
D50	5.0A
D60	6.0A
D70	7.0A
D80	8.0A
U10	10A
U13	13A
U15	15A
U16	16A
U20	20A
U25	25A
U30	30A
U32	32A
U40	40A
U50	50A
U63	63A

DISCOUNT SCHEDULE F

Some of Our Popular Configurations:

MINIATURE CIRCUIT BREAKERS, UL 489 BRANCH CIRCUIT BREAKERS

CATALOG NUMBER	DESCRIPTION	LIST
1100-CB1C2U10	Miniature Circuit Breaker, 1 Pole, 10A, Trip Curve C, UL 489, IEC 60947-2, IEC 60898	$ 58.00
1100-CB1C2D60	Miniature Circuit Breaker, 1 Pole, 6A, Trip Curve C, UL 489, IEC 60947-2, IEC 60898	$ 58.00
1100-CB1D2U10	Miniature Circuit Breaker, 1 Pole, 10A, Trip Curve D, UL 489, IEC 60947-2, IEC 60898	$ 58.00
1100-CB1D2D60	Miniature Circuit Breaker, 1 Pole, 6A, Trip Curve D, UL 489, IEC 60947-2, IEC 60898	$ 58.00
1100-CB2C2U10	Miniature Circuit Breaker, 2 Pole, 10A, Trip Curve C, UL 489, IEC 60947-2, IEC 60898	$116.00
1100-CB2D2D40	Miniature Circuit Breaker, 2 Pole, 4A, Trip Curve D, UL 489, IEC 60947-2, IEC 60898	$116.00
1100-CB3C2U20	Miniature Circuit Breaker, 3 Pole, 20A, Trip Curve C, UL 489, IEC 60947-2, IEC 60898	$174.00
1100-CB3D2U10	Miniature Circuit Breaker, 3 Pole, 10A, Trip Curve D, UL 489, IEC 60947-2, IEC 60898	$174.00

Product Data Sheet

8502SBO2V02S

Full Voltage Magnetic Contactor , Non-Reversing, NEMA Size: 0, 18A

Technical Characteristics

Control Source	Separate Control Circuit
Catalog Reference Number	8502CT9701
Depth	4.22 Inches
Width	3.22 Inches
Height	4.34 Inches
Ampere Rating	18A
Application	Used to switch heating loads, capacitors, transformer and electric motors where overload protection is provided separately
Approvals	UL Listed File E78351 CCN NLDX - CSA Certified File LR60905 Class 3211 04
Enclosure Type	Open
Horsepower Rating (3-Phase)	3HP@200/230VAC - 5HP@460/575VAC
Maximum Voltage Rating	600VAC
Mounting Type	Surface
NEMA Size	0
Number of Poles	3-Pole
Operating Voltage	120VAC@60Hz - 110VAC@50Hz
Phase	3-Phase
Action	Non-Reversing
Terminal Type	Screw Clamp
Type	S
Weight	4 Pounds

Shipping and Ordering

Category	21191 - Contactors/Starters, NEMA, Open/Enclosed (NEMA 1), Size 00 & 0
Discount Schedule	CP1
Article Number	785901862833
Package Quantity	1
Weight	3.25 lbs.
Availability Code	Stock Item: This item is normally stocked in our distribution facility.
Returnability	Y

As standards, specifications, and designs change from time to time, please ask for confirmation of the information given in this document.

Generated: 05/27/2009 12:45:09

© 2009 Schneider Electric. All rights reserved.

Product data sheet
Characteristics

9065SF320
SSOLR, F/B, SIZE 3, 20-90A

Product availability : Stock - Normally stocked in distribution facility

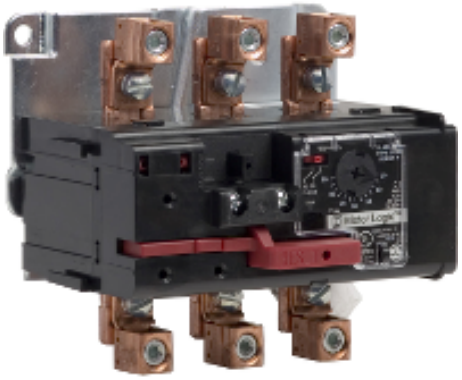

Main

Range of product	Motor Logic
Thermal overload type	Solid state

Complementary

Mounting support	Panel
NEMA size	3
Permissible voltage	<= 600 V AC

Ordering and shipping details

Category	21662 - 9065 SOLID STATE OVERLOAD RELAYS
Discount Schedule	CP1
GTIN	00785901751953
Nbr. of units in pkg.	1
Package weight(Lbs)	2.8199999999999998
Returnability	Y
Country of origin	MX

Offer Sustainability

Sustainable offer status	Not Green Premium product
RoHS (date code: YYWW)	Compliant - since 1206 - Schneider Electric declaration of conformity Schneider Electric declaration of conformity
REACh	Reference not containing SVHC above the threshold Reference not containing SVHC above the threshold

Contractual warranty

Warranty period	18 months

Disclaimer: This documentation is not intended as a substitute for and is not to be used for determining suitability or reliability of these products for specific user applications

Product Data Sheet

9999SX7

CONTACTOR+STARTER AUXILIARY CONTACT KIT

Technical Characteristics

For Use With	SA-SJ - NEMA Size 00 thru 7
Maximum Voltage Rating	600VAC
Specifications	External-Field Convertible
Terminal Type	Screw Clamp
Ampere Rating	10A
Application	Auxiliary Contacts
Contact Configuration	1 Normally Closed

Shipping and Ordering

Category	21761 - Kits, Modification, Discount Sheet CP1
Discount Schedule	CP1
GTIN	00785901733508
Package Quantity	1
Weight	0.22 lbs.
Availability Code	Stock Item: This item is normally stocked in our distribution facility.
Returnability	Y
Country of Origin	MX

As standards, specifications, and designs change from time to time, please ask for confirmation of the information given in this document.

Generated: 02/07/2013 23:52:07

© 2013 Schneider Electric. All rights reserved.

Product data sheet
Characteristics

9070T250D1
TRANSFORMER CONTROL 250VA 240/480V-120V

Product availability: Stock - Normally stocked in distribution facility

Main

Commercial Status	Commercialised
Product or component type	Industrial Control Transformer
Product certifications	CE CSA UL listed
NEMA degree of protection	Not rated (open device)
Insulation temperature	266 °F (130 °C)
Network number of phases	1 phase
Rated power in VA	250 VA
Primary voltage	240 x 480 V 230 x 460 V 220 x 440 V
Secondary voltage	120 V 115 V 110 V
Temperature rise	80 °C
Electrical connection	Screw clamp terminals
Range of product	T

Ordering and shipping details

Category	16201 - 9070 T (NOT TF) 250-2000VA
Discount Schedule	CP8
GTIN	00785901904670
Nbr. of units in pkg.	1
Package weight(Lbs)	7.92
Product availability	Stock - Normally stocked in distribution facility
Returnability	Y
Country of origin	MX

Contractual warranty

Period	10 years

The information provided in this documentation contains general descriptions and/or technical characteristics of the performance of the products contained herein.
This documentation is not intended as a substitute for and is not to be used for determining suitability or reliability of these products for specific user applications.
It is the duty of any such user or integrator to perform the appropriate and complete risk analysis, evaluation and testing of the products with respect to the relevant specific application or use thereof.
Neither Schneider Electric Industries SAS nor any of its affiliates or subsidiaries shall be responsible or liable for misuse of the information contained herein. *Prices are indicative

Product Data Sheet

9001SKS11B

Non-Illuminated Selector Switch Operator, Maintained, Type: SK, Size: 30mm

Technical Characteristics

Enclosure Rating	NEMA 1/2/3/3R/4/4X/6/12/13; IP65
Head Type	Round
Knob Color	Black
Knob Type	Standard
Mounting Type	Panel
Mounting Position	All
Number of Operators	1
Number of Positions	2
Operator Type	Maintained
Size	30mm
Type	SK

Shipping and Ordering

Category	21429 - Push Buttons, Corrosion Resistant, Type SK & SKY
Discount Schedule	CP1
Article Number	785901524366
Package Quantity	1
Weight	0.13 lbs.
Returnability	Y

As standards, specifications, and designs change from time to time, please ask for confirmation of the information given in this document.

Generated: 06/16/2009 19:28:52

© 2009 Schneider Electric. All rights reserved.

Product Data Sheet

9001KA2

30MM CONTACT BLOCK 1N/O

Technical Characteristics

Ampere Rating	10A
Approvals	UL File Number E42259 CCN NKCR - CSA File Number LR24590 Class 3211-03 - CE Marked
Contact Configuration	1 NO
Contact Type	Standard (Fingersafe)
Maximum Voltage Rating	600V
Size	30mm
Terminal Type	Screw Clamp
Type	K

Shipping and Ordering

Category	21434 - Blocks, Contact, Type KA
Discount Schedule	CS1
GTIN	00785901880011
Package Quantity	1
Weight	0.05 lbs.
Returnability	Y
Country of Origin	MX

As standards, specifications, and designs change from time to time, please ask for confirmation of the information given in this document.

Generated: 01/30/2013 19:49:42

© 2013 Schneider Electric. All rights reserved.

Product Data Sheet

9001KA3

30MM CONTACT BLOCK 1N/C

Technical Characteristics

Ampere Rating	10A
Approvals	UL File Number E42259 CCN NKCR - CSA File Number LR24590 Class 3211-03 - CE Marked
Contact Configuration	1 NC
Contact Type	Standard (Fingersafe)
Maximum Voltage Rating	600V
Size	30mm
Terminal Type	Screw Clamp
Type	K

Shipping and Ordering

Category	21434 - Blocks, Contact, Type KA
Discount Schedule	CS1
GTIN	00785901880028
Package Quantity	1
Weight	0.05 lbs.
Returnability	Y
Country of Origin	MX

As standards, specifications, and designs change from time to time, please ask for confirmation of the information given in this document.

Generated: 01/30/2013 19:50:35

© 2013 Schneider Electric. All rights reserved.

Product Data Sheet

9001SKR1U

30MM PUSH BUTTON FULL GUARD

Technical Characteristics

Approvals	UL File Number E42259 CCN NKCR - CSA File Number LR24590 Class 3211-03 - CE Marked
Bezel Material	Black Plastic
Button/Cap Color	Universal (Contains 1 of each: Black, Red, Green, Yellow, Orange, Blue and White)
Button Type	Standard Pushbutton
Guard Type	Full Guard (Black Plastic)
Contact Configuration	No Contact Blocks
Enclosure Type	Water tight, Dust tight, Oil tight and Corrosion Resistant (Indoor/Outdoor)
Enclosure Rating	NEMA 1/2/3/3R/4/4X/6/12/13
Head Type	Round
Light Module Supply Voltage	n/a
Light Module Type	n/a
Markings	None
Maximum Voltage Rating	600V
Mounting Type	Panel
Number of Operators	1
Number of Positions	2
Operator Action	Momentary
Size	30mm
Operator Type	Non-Illuminated
Type	K

Shipping and Ordering

Category	21429 - Push Buttons, Corrosion Resistant, Type SK & SKY
Discount Schedule	CS1
GTIN	00785901458135
Package Quantity	1
Weight	0.11 lbs.
Returnability	Y
Country of Origin	MX

As standards, specifications, and designs change from time to time, please ask for confirmation of the information given in this document.

Generated: 01/30/2013 19:58:19

© 2013 Schneider Electric. All rights reserved.

Product Data Sheet

9001SKT38LG

PILOT LIGHT 120V 30MM SK +OPTIONS

Shown with color cap: ordered separately

Technical Characteristics

Approvals	UL File Number E42259 CCN NKCR - CSA File Number LR24590 Class 3211-03 - CE Marked
Bezel Material	Black Plastic
Enclosure Type	Water tight, Dust tight, Oil tight and Corrosion Resistant (Indoor/Outdoor)
Enclosure Rating	NEMA 1/2/3/3R/4/4X/6/12/13
Head Type	Round
Lens Color	No Lens
Light Module Supply Voltage	120V
Lens Type	No Lens
Light Module Type	LED (Green)
Operator Type	Push-To-Test
Size	30mm
Type	K
Terminal Type	Screw Clamp

Shipping and Ordering

Category	21429 - Push Buttons, Corrosion Resistant, Type SK & SKY
Discount Schedule	CS1
GTIN	00785901158684
Package Quantity	1
Weight	0.26 lbs.
Returnability	Y
Country of Origin	MX

As standards, specifications, and designs change from time to time, please ask for confirmation of the information given in this document.

Generated: 01/30/2013 19:59:52

© 2013 Schneider Electric. All rights reserved.

Product data sheet
Characteristics

9001G31
green Fresnel lens cap - for pilot light Ø 30

Main

Commercial Status	Commercialised
Range of product	Harmony 9001K Harmony 9001SK
Accessory / separate part designation	Fresnel lens cap
Accessory / separate part type	Lens cap
Accessory / separate part category	Spare parts
Accessory / separate part destination	Pilot light

Complementary

Mounting diameter	1.18 in (30 mm)
Cap/Operator or lens colour	Green
Product weight	0.01 lb(US) (0.005 kg)

Ordering and shipping details

Category	21433 - 9001 ACCESS FOR K,KX,SK
Discount Schedule	CS1
GTIN	00785901056119
Nbr. of units in pkg.	1
Package weight(Lbs)	0.01
Returnability	Y
Country of origin	MX

Offer Sustainability

Sustainable offer status	Not Green Premium product
RoHS	Compliant - since 0921 - Schneider Electric declaration of conformity
REACh	Reference not containing SVHC above the threshold

Contractual warranty

Period	18 months

The information provided in this documentation contains general descriptions and/or technical characteristics of the performance of the products contained herein.
This documentation is not intended as a substitute for and is not to be used for determining suitability or reliability of these products for specific user applications.
It is the duty of any such user or integrator to perform the appropriate and complete risk analysis, evaluation and testing of the products with respect to the relevant specific application or use thereof.
Neither Schneider Electric Industries SAS nor any of its affiliates or subsidiaries shall be responsible or liable for misuse of the information contained herein. *Prices are indicative

Product Data Sheet

9001SKT38LY

PILOT LIGHT 120V 30MM SK +OPTIONS

Shown with color cap: ordered separately

Technical Characteristics

Approvals	UL File Number E42259 CCN NKCR - CSA File Number LR24590 Class 3211-03 - CE Marked
Bezel Material	Black Plastic
Enclosure Type	Water tight, Dust tight, Oil tight and Corrosion Resistant (Indoor/Outdoor)
Enclosure Rating	NEMA 1/2/3/3R/4/4X/6/12/13
Head Type	Round
Lens Color	No Lens
Light Module Supply Voltage	120V
Lens Type	No Lens
Light Module Type	LED (Yellow)
Operator Type	Push-To-Test
Size	30mm
Type	K
Terminal Type	Screw Clamp

Shipping and Ordering

Category	21429 - Push Buttons, Corrosion Resistant, Type SK & SKY
Discount Schedule	CS1
GTIN	00785901398806
Package Quantity	1
Weight	0.26 lbs.
Returnability	Y
Country of Origin	MX

As standards, specifications, and designs change from time to time, please ask for confirmation of the information given in this document.

Generated: 01/30/2013 20:03:45

© 2013 Schneider Electric. All rights reserved.

Product data sheet
Characteristics

9001A31
30MM PLASTIC LENS FOR PILOT LIGHT AMBER

Main

Commercial Status	Commercialised

Ordering and shipping details

Category	21433 - 9001 ACCESS FOR K,KX,SK
Discount Schedule	CS1
GTIN	00785901056133
Nbr. of units in pkg.	1
Package weight(Lbs)	0.01
-	- -
Returnability	Y
Country of origin	MX

Offer Sustainability

Sustainable offer status	Not Green Premium product
RoHS	Compliant - since 0921 - Schneider Electric declaration of conformity
REACh	Reference not containing SVHC above the threshold

Contractual warranty

Period	18 months

The information provided in this documentation contains general descriptions and/or technical characteristics of the performance of the products contained herein.
This documentation is not intended as a substitute for and is not to be used for determining suitability or reliability of these products for specific user applications.
It is the duty of any such user or integrator to perform the appropriate and complete risk analysis, evaluation and testing of the products with respect to the relevant specific application or use thereof.
Neither Schneider Electric Industries SAS nor any of its affiliates or subsidiaries shall be responsible or liable for misuse of the information contained herein. *Prices are indicative

Product Data Sheet

9001SKT38LR

PILOT LIGHT 120V 30MM SK +OPTIONS

Shown with color cap: ordered separately

Technical Characteristics

Approvals	UL File Number E42259 CCN NKCR - CSA File Number LR24590 Class 3211-03 - CE Marked
Bezel Material	Black Plastic
Enclosure Type	Water tight, Dust tight, Oil tight and Corrosion Resistant (Indoor/Outdoor)
Enclosure Rating	NEMA 1/2/3/3R/4/4X/6/12/13
Head Type	Round
Lens Color	No Lens
Light Module Supply Voltage	120V
Lens Type	No Lens
Light Module Type	LED (Red)
Operator Type	Push-To-Test
Size	30mm
Type	K
Terminal Type	Screw Clamp

Shipping and Ordering

Category	21429 - Push Buttons, Corrosion Resistant, Type SK & SKY
Discount Schedule	CS1
GTIN	00785901398790
Package Quantity	1
Weight	0.26 lbs.
Returnability	Y
Country of Origin	MX

As standards, specifications, and designs change from time to time, please ask for confirmation of the information given in this document.

Generated: 01/30/2013 20:01:47

© 2013 Schneider Electric. All rights reserved.

Product data sheet
Characteristics

9001R31
red Fresnel lens cap - for pilot light Ø 30

Main

Commercial Status	Commercialised
Range of product	Harmony 9001K Harmony 9001SK
Accessory / separate part designation	Fresnel lens cap
Accessory / separate part type	Lens cap
Accessory / separate part category	Spare parts
Accessory / separate part destination	Pilot light

Complementary

Mounting diameter	1.18 in (30 mm)
Cap/Operator or lens colour	Red
Product weight	0.01 lb(US) (0.005 kg)

Ordering and shipping details

Category	21433 - 9001 ACCESS FOR K,KX,SK
Discount Schedule	CS1
GTIN	00785901056096
Nbr. of units in pkg.	1
Package weight(Lbs)	0.01
Returnability	Y
Country of origin	MX

Offer Sustainability

Sustainable offer status	Not Green Premium product
RoHS	Compliant - since 0921 - Schneider Electric declaration of conformity
REACh	Reference not containing SVHC above the threshold

Contractual warranty

Period	18 months

The information provided in this documentation contains general descriptions and/or technical characteristics of the performance of the products contained herein.
This documentation is not intended as a substitute for and is not to be used for determining suitability or reliability of these products for specific user applications.
It is the duty of any such user or integrator to perform the appropriate and complete risk analysis, evaluation and testing of the products with respect to the relevant specific application or use thereof.
Neither Schneider Electric Industries SAS nor any of its affiliates or subsidiaries shall be responsible or liable for misuse of the information contained herein. *Prices are indicative

Product data sheet
Characteristics

RXM4AB2B7
Miniature Plug-in relay - Zelio RXM 4 C/O 24 V AC 6 A with LED

Product availability : Stock - Normally stocked in distribution facility

Main

Range of product	Zelio Relay
Series name	Miniature
Product or component type	Plug-in relay
Device short name	RXM
Contacts type and composition	4 C/O
[Uc] control circuit voltage	24 V AC 50/60 Hz
[Ithe] conventional enclosed thermal current	6 A -40…131 °F (-40…55 °C)
Status LED	With
Control type	Lockable test button
Utilisation coefficient	20 %

Complementary

Shape of pin	Flat
[Ui] rated insulation voltage	250 V IEC 300 V CSA 300 V UL
[Uimp] rated impulse withstand voltage	2.5 kV 1.2/50 µs
Contacts material	AgNi
[Ie] rated operational current	3 A 28 V DC) NC IEC 3 A 250 V AC) NC IEC 6 A 28 V DC) NO IEC 6 A 250 V AC) NO IEC 6 A 277 V AC) UL 8 A 30 V DC) UL
Maximum switching voltage	250 V IEC
Resistive rated load	6 A 250 V AC 6 A 28 V DC

Disclaimer: This documentation is not intended as a substitute for and is not to be used for determining suitability or reliability of these products for specific user applications

Maximum switching capacity	1500 VA/168 W
Minimum switching capacity	170 mW 10 mA, 17 V
Operating rate	<= 1200 cycles/hour under load <= 18000 cycles/hour no-load
Mechanical durability	10000000 cycles
Electrical durability	100000 cycles resistive
Average coil consumption in VA	1.2 60 Hz
Average consumption	1.2 VA 60 Hz
Drop-out voltage threshold	>= 0.15 Uc
Operate time	20 ms
Release time	20 ms
Average coil resistance	180 Ohm 20 °C +/- 15 %
Rated operational voltage limits	19.2...26.4 V AC
Safety reliability data	B10d = 100000
Protection category	RT I
Test levels	Level A
Operating position	Any position
CAD overall height	3.26 in (82.8 mm)
CAD overall depth	3.16 in (80.35 mm)
Net weight	0.08 lb(US) (0.037 kg)
Device presentation	Complete product

Environment

Dielectric strength	1300 V AC between contacts micro disconnection 2000 V AC between coil and contact reinforced 2000 V AC between poles basic
Product certifications	CSA RoHS CE REACH Lloyd's UL GOST
Standards	CSA C22.2 No 14 EN/IEC 61810-1 UL 508
Ambient air temperature for storage	-40…185 °F (-40…85 °C)
Ambient air temperature for operation	-40…131 °F (-40…55 °C)
Vibration resistance	3 gn +/- 1 mm 10…150 Hz)5 cycles in operation 5 gn +/- 1 mm 10…150 Hz)5 cycles not operating
IP degree of protection	IP40 EN/IEC 60529
Shock resistance	10 gnin operation 30 gnnot operating
Pollution degree	2

Ordering and shipping details

Category	21127 - ZELIO ICE CUBE RELAYS
Discount Schedule	CP2
GTIN	00785901511373
Package weight(Lbs)	0.04 kg (0.08 lb(US))
Returnability	Yes
Country of origin	CN

Offer Sustainability

Sustainable offer status	Green Premium product
REACh Regulation	REACh Declaration

Relay and Timer Socket Selection Guide

Relay and Timer Sockets

Mounting	Series	Page	Part No.	No. of Poles	Receptacle	Terminal	Compatible IDEC Relay and Timer
DIN Rail Snap-Mount	SR	F-6	SR2P-05 SR2P-05C SR2P-06	2	8-Pin	M3.5 Screw	RR2P, GT5P, RTE-P1, GT3 (8-pin)
			SR3P-05 SR3P-05C SR3P-06	3	11-Pin		RR3PA, RR2KP, RTE-P2 GT3 (11-pin)
			SR3B-05	3	11-Blade		RR1BA, RR2BA, RR3B, RTE-B
	SH	F-9	SH1B-05 SH1B-05C	1	5-Blade	M3.5 Screw Coil Terminal: M3	RH1B
			SH2B-05 SH2B-05C	2	8-Blade	M3.5 Screw	RH2B
			SH3B-05 SH3B-05C	3	11-Blade		RH3B, RH2LB
			SH4B-05 SH4B-05C	4	14-Blade		RH4B
	SY	F-13	SY2S-05 SY2S-05C	2	8-Blade	M3 Screw	RY2S, RY22S
			SY4S-05 SY4S-05C	4	14-Blade		RU4S, RY4S, RY42S, RY2KS, RY2LS, RM2S, GT5Y
	SM	F-15	SM2S-05 SM2S-05C				RU2S
Panel Mount	SR	F-16	SR2P-51	2	8-Pin	Solder	RR2P, RAPP, RBPP, GT5P, RTE-P1, GT3 (8-pin)
			SR3P-51	3	11-Pin		RR3PA, RR2KP, RTE-P2, GT3 (11-pin)
			SR3B-51	3	11-Blade		RR1BA, RR2BA, RR3B
	SH	F-17	SH1B-51	1	5-Blade		RH1B, RAHB, RBHB
			SH2B-51	2	8-Blade		RH2B, RAMB, RBMB
			SH3B-51	3	11-Blade		RH3B, RH2LB
			SH4B-51	4	14-Blade		RH4B
	SY	F-19	SY2S-51	2	8-Blade		RY2S, RY22S
			SY4S-51	4	14-Blade		RY4S, RY42S, RY2KS, RY2LS, RM2S, GT5Y
PCB Mount	SH	F3-20	SH1B-62	1	5-Blade	PC Board	RH1B, RAHB, RBHB
			SH2B-62	2	8-Blade		RH2B, RAMB, RBMB
			SH3B-62	3	11-Blade		RH3B, RH2LB
			SH4B-62	4	14-Blade		RH4B
	SY	F3-21	SY2S-61	2	8-Blade		RY2S, RY22S
			SY4S-61	4	14-Blade		RY4S, RY42S, RY2KS, RY2LS, RM2S, GT5Y
			SY4S-62	4	14-Blade		RY4S, RY42S, RY2KS, RY2LS, RM2S, GT5Y
Surface Mount	SH	F-23	SH2B-02	2	8-Blade	M3.5 Screw	RH2B, RAMB, RBMB
For Panel Mounted Timers							
	SR	F-23	SR6P-M08G	2	8-pin	M3.5 Screw	GE1A; RTE-P1; GT3A-1,-2,-3; GT3D-1,-2,-3; GT3W (8-pin); GT3S; GT3F
			SR6P-M11G		11-pin		RTE-P2; GT3A-4,-5,-6; GT3D-4,-8; GT3W (11-pin)

F

For relay mounting accessories, see page F-24.

Product Data Sheet

PK9GTA

LOAD CENTER EQUIPMENT GROUND BAR ASSY

Technical Characteristics

Application	Load Centers
Marketing Trade Name	QO and Homeline
Circuit Breaker Type	PK
Height	12.57 Inches
Width	8.88 Inches

Shipping and Ordering

Category	00102 - Load Centers, Accessories, Type QO
Discount Schedule	DE3A
GTIN	00785901026396
Package Quantity	10
Weight	0.11 lbs.
Availability Code	Stock Item: This item is normally stocked in our distribution facility.
Returnability	Y
Country of Origin	US

As standards, specifications, and designs change from time to time, please ask for confirmation of the information given in this document.

Generated: 06/13/2012 12:38:02

© 2012 Schneider Electric. All rights reserved.

Visual Beacons

Part Number
R7-XS-7

Description
Polycarbonate Beacon, 120V, 7W, 2" x 2", UL 4X
R=Red, A=Amber, B=Blue, G=Green
NITW - Industrial Control Panel Components

* 1/4" Quick Connect Terminals
* Single Hole Mount
* 12V available

Part Number
R10-SM-10

Description
Polycarbonate Beacon, 120V, 10W, 2.5" x 2.5", UL 4X
R=Red, A=Amber, B=Blue, G=Green
NITW - Industrial Control Panel Components

* 1/4" Quick Connect Terminals
* Single Hole Mount
* 12V available

Part Number
R15-MB-15

Description
Polycarbonate Beacon, 120V, 15W, 2.5" x 3.75", UL 4X
R=Red, A=Amber, B=Blue, G=Green
NITW - Industrial Control Panel Components

* 1/4" Quick Connect Terminals
* Single Hole Mount
* 12V and 24V available
* LED available in 120V or 24V

Part Number
R25-LG-25

Description
Polycarbonate Beacon, 120V, 15W, 3.5" x 3.75", UL 4X
R=Red, A=Amber, B=Blue, G=Green
NITW - Industrial Control Panel Components
* 12" Pre-Wired Leads
* Single Hole Mount
* 12V and 24V available
* LED available in 120V or 24V

Part Number
R40-XLS-25
R40-XLS-40

Description
Polycarbonate Beacon, 120V, 25W, 4.25" x 4.25", UL 4X
Polycarbonate Beacon, 120V, 40W, 4.25" x 4.25", UL 4X, Flasher
R=Red, A=Amber, B=Blue, G=Green
NITW - Industrial Control Panel Components
* 12" Pre-Wired Leads
* Single Hole Mount
* 12V and 24V available
* LED available in 120V or 24V

Product Data Sheet

9001SKR1U

30MM PUSH BUTTON FULL GUARD

Technical Characteristics

Approvals	UL File Number E42259 CCN NKCR - CSA File Number LR24590 Class 3211-03 - CE Marked
Bezel Material	Black Plastic
Button/Cap Color	Universal (Contains 1 of each: Black, Red, Green, Yellow, Orange, Blue and White)
Button Type	Standard Pushbutton
Guard Type	Full Guard (Black Plastic)
Contact Configuration	No Contact Blocks
Enclosure Type	Water tight, Dust tight, Oil tight and Corrosion Resistant (Indoor/Outdoor)
Enclosure Rating	NEMA 1/2/3/3R/4/4X/6/12/13
Head Type	Round
Light Module Supply Voltage	n/a
Light Module Type	n/a
Markings	None
Maximum Voltage Rating	600V
Mounting Type	Panel
Number of Operators	1
Number of Positions	2
Operator Action	Momentary
Size	30mm
Operator Type	Non-Illuminated
Type	K

Shipping and Ordering

Category	21429 - Push Buttons, Corrosion Resistant, Type SK & SKY
Discount Schedule	CS1
GTIN	00785901458135
Package Quantity	1
Weight	0.11 lbs.
Returnability	Y
Country of Origin	MX

As standards, specifications, and designs change from time to time, please ask for confirmation of the information given in this document.

Generated: 01/30/2013 19:58:19

© 2013 Schneider Electric. All rights reserved.

Product Data Sheet

9001KA2

30MM CONTACT BLOCK 1N/O

Technical Characteristics

Ampere Rating	10A
Approvals	UL File Number E42259 CCN NKCR - CSA File Number LR24590 Class 3211-03 - CE Marked
Contact Configuration	1 NO
Contact Type	Standard (Fingersafe)
Maximum Voltage Rating	600V
Size	30mm
Terminal Type	Screw Clamp
Type	K

Shipping and Ordering

Category	21434 - Blocks, Contact, Type KA
Discount Schedule	CS1
GTIN	00785901880011
Package Quantity	1
Weight	0.05 lbs.
Returnability	Y
Country of Origin	MX

As standards, specifications, and designs change from time to time, please ask for confirmation of the information given in this document.

Generated: 01/30/2013 19:49:42

© 2013 Schneider Electric. All rights reserved.

zima
Jagenberg Group
Manufacture.Quality.Solutions.
Kusters Water Division

SECTION THREE
GENERAL LAYOUT DRAWINGS

zima
Jagenberg Group
Manufacture.Quality.Solutions.
Kusters Water Division

3.1 – GENERAL LAYOUT DRAWINGS

REV.	CN NO.	REVISION DESCRIPTION	REVISED BY	APPROVED BY	DATE
1	N/A	SCUM TROUGH LOCATION UPDATED PER CUSTOMER FEEDBACK	EAN		8/3/2023
2	N/A	SCUM TROUGH ORIENTATION CORRECTED	EAN		8/17/2023

1) KUSTERS CLARIFICATION EQUIPMENT IS DESIGNED TO FIT THE BASIN DIMENSIONS SHOWN ON THE FINAL APPROVED DRAWINGS. ANY DEVIATIONS MUST BE REPORTED PRIOR TO THE START OF PRODUCTION.

2) KUSTERS DOES NOT FURNISH EXCAVATION, FOUNDATION, RE-BAR, CONCRETE, GROUT, UNDERSLAB OR YARD PIPING, FIELD ASSEMBLY, ERECTION, FINISH PAINTING OR ELECTRICAL CONNECTION UNLESS CALLED FOR IN THE CONTRACT DOCUMENTS.

3) ALL STEEL ITEMS TO BE A-36 MATERIAL.
WELD USING E70XX ELECTRODES WITH WELDING PERFORMED BY CERTIFIED WELDERS PER AWS D1.1.

4) ALL SUBMERGED STEEL IS PRIME PAINTED
ALL NON-SUBMERGED STEEL IS PRIME PAINTED

5) EQUIPMENT ITEMS SHOWN ON KUSTERS DRAWINGS ARE PROVIDED ONLY IF INCLUDED IN THE QUOTATION AND TOTAL SCOPE OF WORK.

6) CONTRACTOR TO VERIFY AND IDENTIFY ANY BASIN WALL, PENETRATIONS, PROTRUDING EQUIPMENT, OR PIPING THAT MAY INTERFERE WITH THE ROTATING MECHANISM.

7) DURING FINAL DESIGN AND PRODUCTION PHASES, KUSTERS ENGINEERING RESERVES THE RIGHT TO MAKE MINOR DESIGN CHANGES, MATERIAL SUBSTITUTIONS, OR MATERIAL ADDITIONS THAT DO NOT AFFECT THE BASIC EQUIPMENT FUNCTION, OVERALL PERFORMANCE, OR DEVIATE FROM THE CONTRACT SPECIFICATIONS. THE FINAL AS-BUILT/ERECTION DRAWINGS WILL REFLECT ALL OF THESE IMPROVEMENTS OR MODIFICATIONS.

8) APPROVAL DRAWINGS ARE OFTEN PICTORIAL AND SHOULD NOT BE SCALED, OR USED FOR POSITIONING OF EQUIPMENT. ERECTION DRAWINGS AND INSTALLATION DATA SHOULD BE UTILIZED.

9) CIRCULAR COLLECTORS ARE DESIGNED TO WITHSTAND THE CONTINUOUS TORQUE LOADINGS SPECIFIED IN THE CONTRACT DOCUMENTS, PLUS OCCASIONAL ALARM OR SHUT-OFF TORQUE LOADS.

ANY SUSTAINED INCREASE IN THE BASIN SOLIDS LOADING THAT GENERATES HIGHER CONTINUOUS OPERATING TORQUE, WILL CREATE EXCESSIVE STRESSES AND VOID THE COLLECTOR WARRANTY.

THIS MECHANISM IS DESIGNED TO HANDLE THE FOLLOWING RATINGS:

DESIGN TORQUE	36,000 (100%)	FT-LBS
ALARM TORQUE	36,000 (100%)	FT-LBS
MOTOR SHUT DOWN TORQUE	43,200 (120%)	FT-LBS
SHEAR PIN TORQUE	46,800 (130%)	FT-LBS

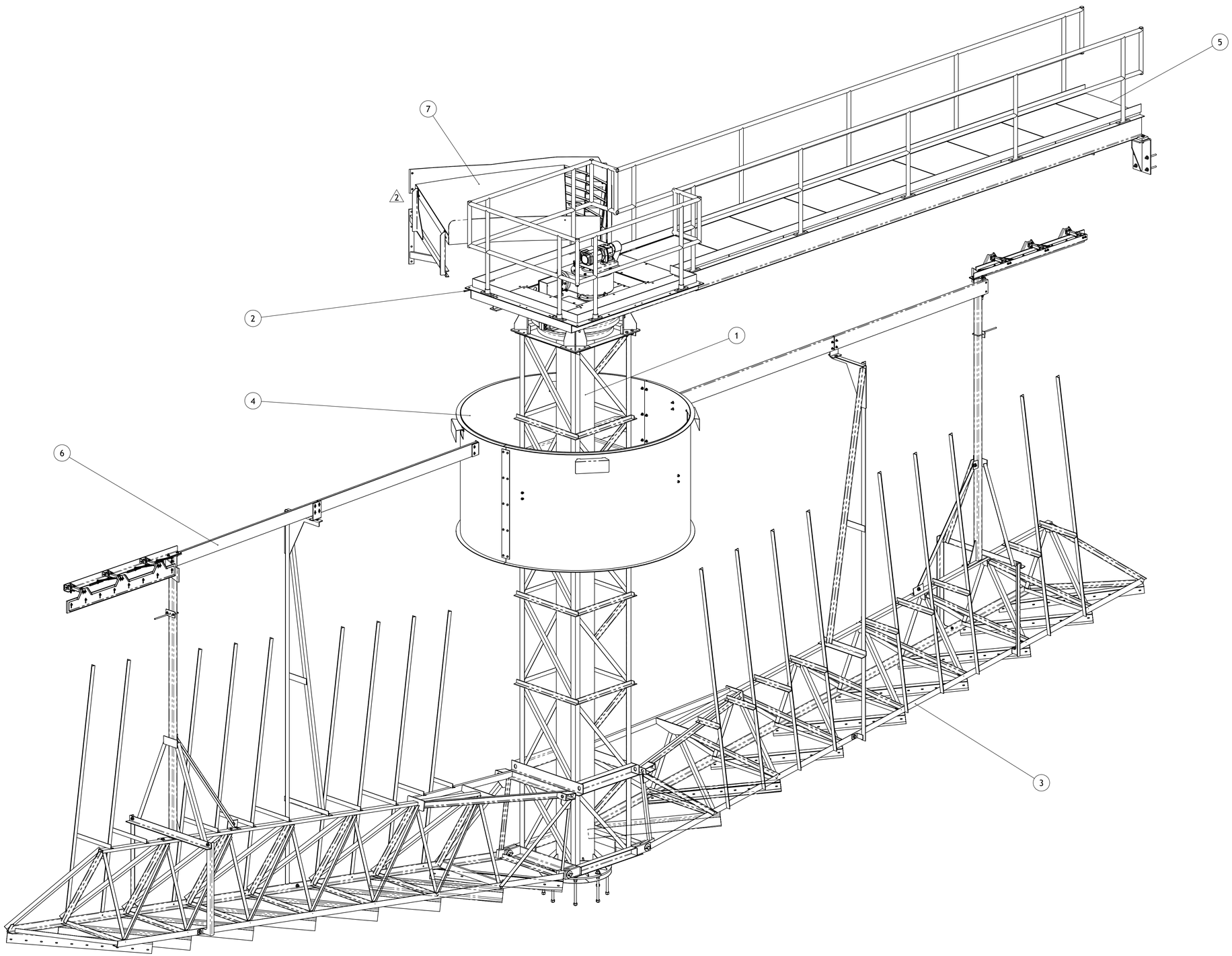

ITEM	QTY	PART NUMBER	DESCRIPTION	MATERIAL	Weight
7	1	87807-913	ASSY, SCUM BOX, 6FT		973.7
6	2	87807-910	ASSY, SKIMMER, 6FT & SUPPORT		514.82
5	1	87807-905	ASSY, BRIDGE		1366.89
4	1	87807-903	ASSY, CENTER WELL/HANGER, 9FT WELL, 37" CAGE		1813.65
3	1	87807-902	ASSY, TRUSS ARM/DRIVE CAGE		4697.2
2	1	87807-901	ASSY, PLATFORM/30" DRIVE, TREADPLATE		3212.93
1	1	87807-900	ASSY, CENTER PIER, 30" DRIVE, 18" O.D.		1350.59

PROPRIETARY DOCUMENT:
NOTICE: THIS DOCUMENT CONTAINS PROPRIETARY INFORMATION WHICH IS THE PROPERTY OF ZIMA CORPORATION. REPRODUCTION, TRANSMITTAL OR USE FOR ANY PURPOSE OTHER THAN THE PROJECT OR PURPOSE FOR WHICH THE INFORMATION IS PROVIDED WITHOUT THE EXPRESS WRITTEN PERMISSION OF ZIMA CORPORATION IS PROHIBITED.

UNLESS OTHERWISE SPECIFIED
THIRD ANGLE PROJECTION
MODIFIED SURFACES:
DIMENSIONS ARE IN MILLIMETERS
TOLERANCES:
ANGULAR: MACH ± 0.1°
BEND ± 0.5°
1 PLACE DECIMAL ± 0.8 MM
2 PLACE DECIMAL ± 0.25 MM
3 PLACE DECIMAL ± 0.100 MM

zima
Jagenberg Group

TITLE ASSY, MAIN, HBST-60FT, WOONSOCKET, RI

SCALE 1:24	WEIGHT: 14444.6 LBS. (EST)	SHEET 1 OF 3	MODEL NO. 87807-101	PARENT DRAWING X
DRAWN EAN	CHECKED	DATE	SIZE D	DWG. NO. 87807-SM101	REV 2

SW-FilePath:C:\Vault\CLARIFIERS\87807 WOONSOCKET, RI\87807-SM101

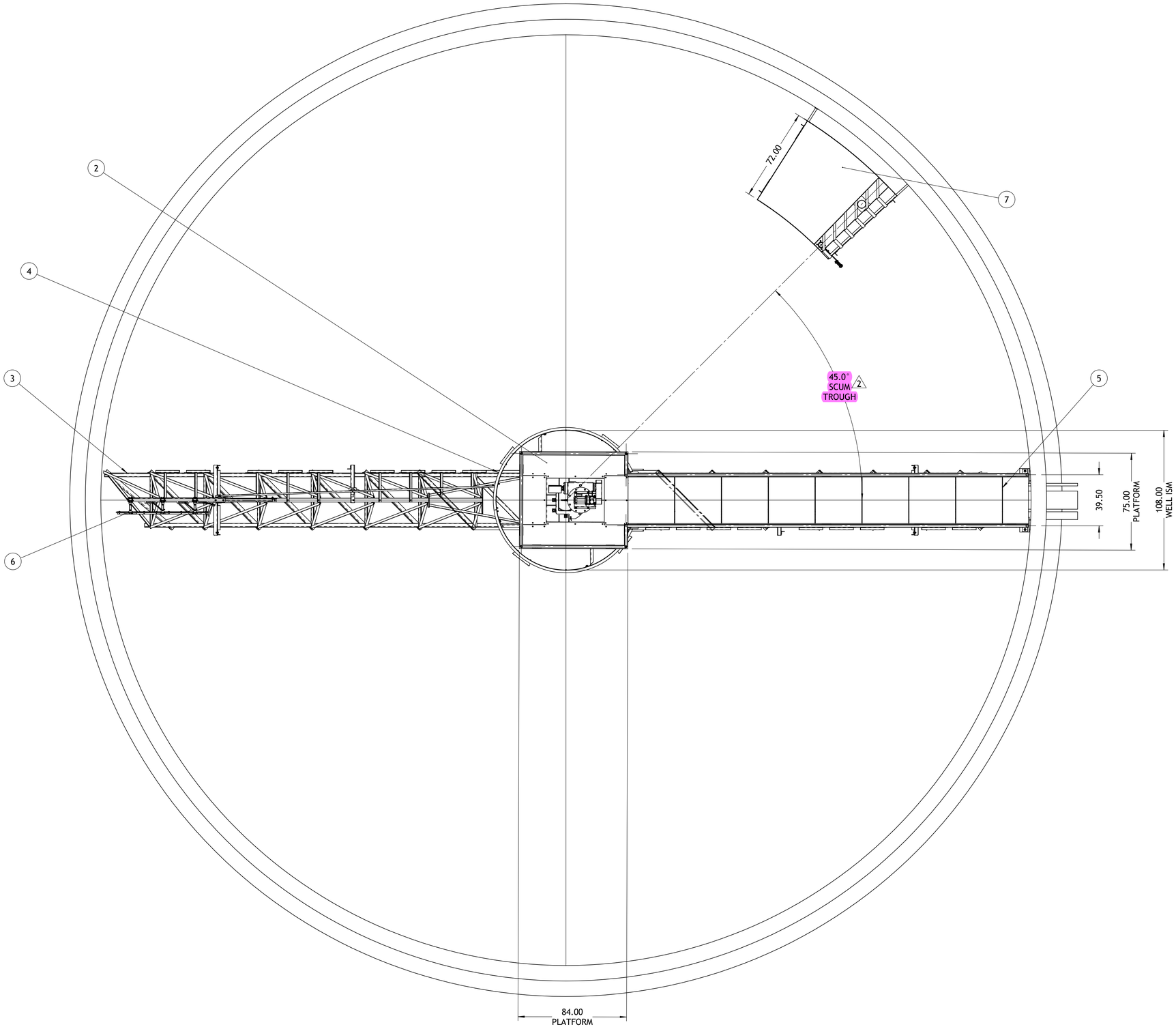

GRAVITY THICKENER
CLOCKWISE ROTATION

PROPRIETARY DOCUMENT:
NOTICE: THIS DOCUMENT CONTAINS PROPRIETARY INFORMATION WHICH IS THE PROPERTY OF ZIMA CORPORATION. REPRODUCTION, TRANSMITTAL OR USE FOR ANY PURPOSE OTHER THAN THE PROJECT OR PURPOSE FOR WHICH THE INFORMATION IS PROVIDED WITHOUT THE EXPRESS WRITTEN PERMISSION OF ZIMA CORPORATION IS PROHIBITED.

UNLESS OTHERWISE SPECIFIED
THIRD ANGLE PROJECTION
MODIFIED SURFACES:
DIMENSIONS ARE IN INCHES
TOLERANCES:
ANGULAR: BEND ± 1°
ALL DIMENSIONS: ± 1/64"

zima
Jagenberg Group

TITLE ASSY, MAIN, HBST-60FT, WOONSOCKET, RI

SCALE 1:40	WEIGHT: 14444.6 LBS. (EST)	SHEET 2 OF 3	MODEL NO. 87807-101	PARENT DRAWING X
DRAWN EAN	CHECKED	DATE	SIZE D	DWG. NO. 87807-SM101	REV 2

SW-FilePath:C:\Vault\CLARIFIERS\87807 WOONSOCKET, RI\87807-SM101

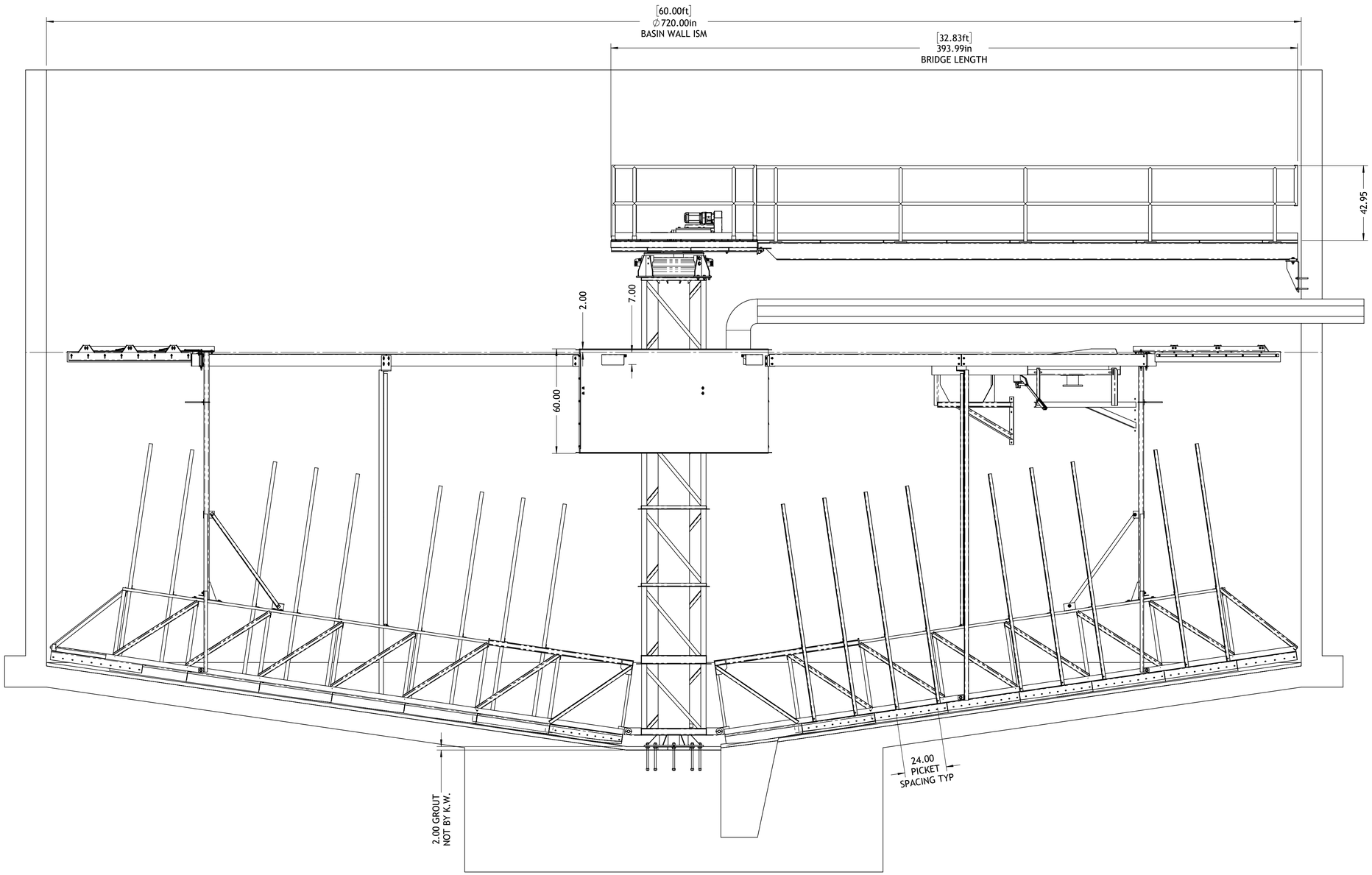

PROPRIETARY DOCUMENT:
NOTICE: THIS DOCUMENT CONTAINS PROPRIETARY INFORMATION WHICH IS THE PROPERTY OF ZIMA CORPORATION. REPRODUCTION, TRANSMITTAL OR USE FOR ANY PURPOSE OTHER THAN THE PROJECT OR PURPOSE FOR WHICH THE INFORMATION IS PROVIDED WITHOUT THE EXPRESS WRITTEN PERMISSION OF ZIMA CORPORATION IS PROHIBITED.

UNLESS OTHERWISE SPECIFIED
THIRD ANGLE PROJECTION
MODIFIED SURFACES:
DIMENSIONS ARE IN MILLIMETERS
TOLERANCES:
ANGULAR: MACH ± 0.1°
ANGULAR: BEND ± 1°
1 PLACE DECIMAL ± 0.8 MM
2 PLACE DECIMAL ± 0.25 MM
3 PLACE DECIMAL ± 0.100 MM

zima
Jagenberg Group

TITLE ASSY, MAIN, HBST-60FT, WOONSOCKET, RI

SCALE 1:32	WEIGHT: 14444.6 LBS. (EST)	SHEET 3 OF 3	MODEL NO. 87807-101	PARENT DRAWING X
DRAWN EAN	CHECKED	DATE	SIZE D	DWG. NO. 87807-SM101	REV 2

SW-FilePath:C:\Vault\CLARIFIERS\87807 WOONSOCKET, RI\87807-SM101

REV.	CN NO.	REVISION DESCRIPTION	REVISED BY	APPROVED BY	DATE
1	N/A	UPDATED GROUT ELEVATIONS	EAN		8/3/2023

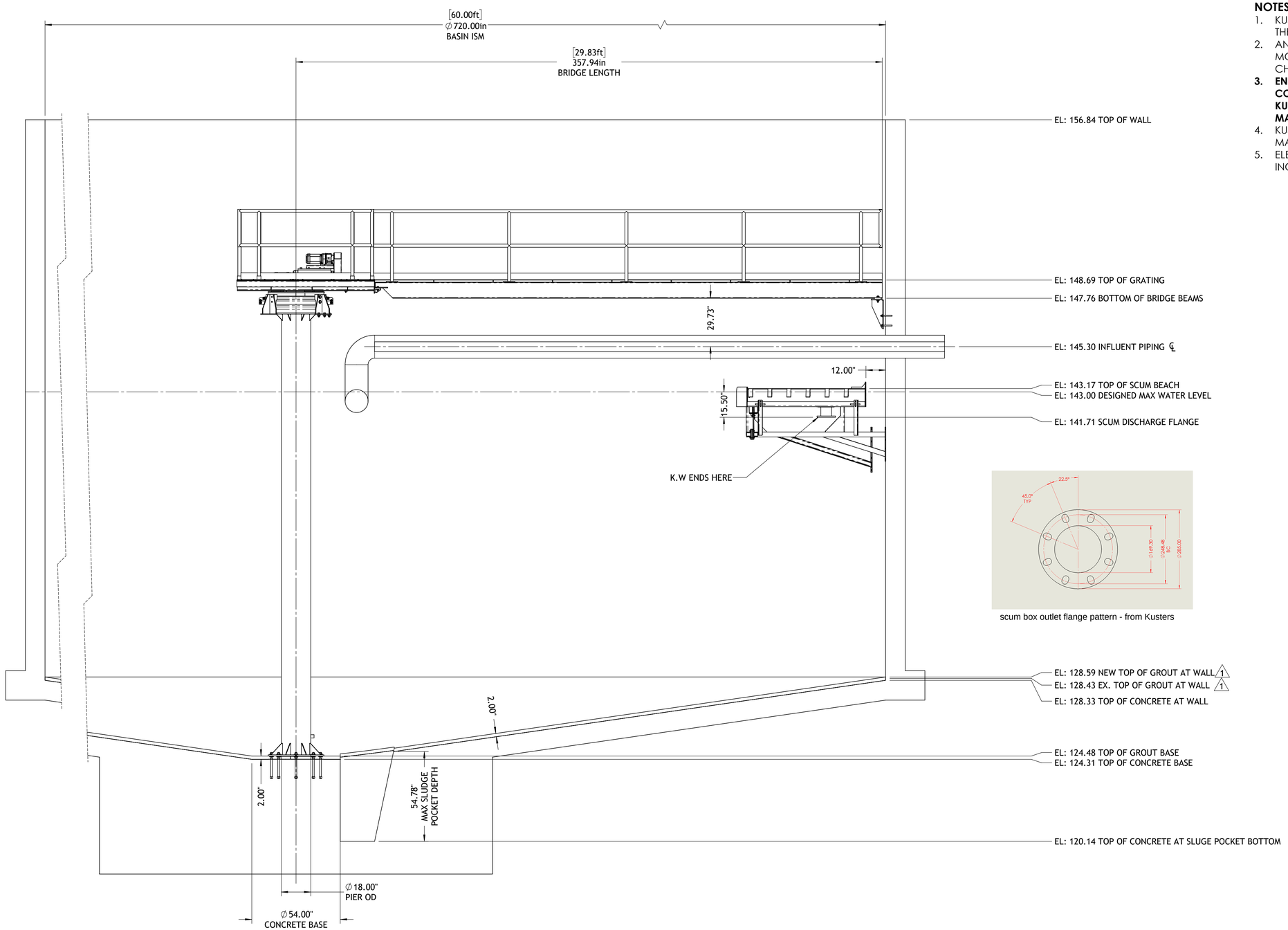

scum box outlet flange pattern - from Kusters

NOTES:

1. KUSTERS WATER WILL MANUFACTURE A CUSTOM CLARIFIER TO FIT THE TANK DIMENSIONS SHOWN.
2. ANY DEVIATION OR CHANGE CAN RESULT IN EXTENSIVE FIELD MODIFICATIONS OF MECHANISM/TANK, WHICH **WILL NOT** BE CHARGED TO KUSTERS WATER ACCOUNT.
3. **ENGINEER MUST VERIFY AND CONFIRM THIS BASIN CONFIGURATION, INCLUDING ALL DIMENSIONS SHOWN BEFORE KUSTERS WATER CAN PROCEED WITH PROJECT FINAL DESIGN AND MANUFACTURING.**
4. KUSTERS WATER DOES NOT FURNISH GROUT OR ANY FOUNDATION MATERIALS.
5. ELEVATION DIMENSIONS ARE IN FEET. OTHER DIMENSIONS ARE IN INCHES

PROPRIETARY DOCUMENT:
NOTICE: THIS DOCUMENT CONTAINS PROPRIETARY INFORMATION WHICH IS THE PROPERTY OF ZIMA CORPORATION. REPRODUCTION, TRANSMITTAL OR USE FOR ANY PURPOSE OTHER THAN THE PROJECT OR PURPOSE FOR WHICH THE INFORMATION IS PROVIDED WITHOUT THE EXPRESS WRITTEN PERMISSION OF ZIMA CORPORATION IS PROHIBITED.

UNLESS OTHERWISE SPECIFIED
THIRD ANGLE PROJECTION
MODIFIED SURFACES:
DIMENSIONS ARE IN INCHES
TOLERANCES:
ANGULAR: BEND ± 1°
ALL DIMENSIONS: ± 1/4"

zima
Jagenberg Group

TITLE ASSY, MAIN, HBST-60FT, WOONSOCKET, RI

SCALE 1:32	WEIGHT: 7418.9 LBS. (EST)	SHEET 1 OF 1	MODEL NO. 87807-101	PARENT DRAWING X
DRAWN EAN	CHECKED	DATE	SIZE D	DWG. NO. 87807-SM501	REV 1

SW-FilePath:C:\Vault\CLARIFIERS\87807 WOONSOCKET, RI\87807-SM501

ATTACHMENT B
SECTION 46 71 13.01

GT WEIRS AND BAFFLES APPROVED SUBMITTAL

SECTION 46 71 13.01 ATTACHMENT B
APPROVED WEIRS & BAFFLES SUBMITTAL

Weston & Sampson

55 Walkers Brook Drive, Suite 100, Reading, MA 01867
Tel: 978.532.1900

SHOP DRAWING REVIEW MEMORANDUM

TO:	Tim Johnson - Zima Corporation (Kusters Water) Mike Migliori - Atlantic Fluid Technology
FROM:	Jarod Stuyvesant, PE, Weston & Sampson Engineers, Inc.
DATE:	September 6, 2023
PROJECT:	ENG23-0204 Woonsocket WWTF Gravity Thickener Kusters Water Project no. WT87807 PO #P230884
SUBJECT:	Transmittal 46 71 13.01 – Rev 02 – GT Weirs and Baffles (only)

The following comments apply to shop drawing Transmittal 46 71 13.01, Rev 01 and shall be considered part of that submittal. The items in the submittal are noted below.

The comments contained in this Shop Drawing Review Memorandum are intended for use as a guide towards submittal of an approvable shop drawing transmittal and are not intended to be used as a complete checklist of revisions or to supersede the Contract Documents.

Note that failure by the Supplier to indicate deviations between the proposed equipment and the specified equipment implies full compliance with the project contract documents.

Item No. 1 – 46 71 13.01 – Gravity Thickener Mechanism Supply

- Specification Sections: 46 71 13.01
- Drawing Sheets:
- Review Code: 1 - Furnish as Submitted

Comments:

1. No comments or revisions.

PROTECTOLITE™
COMPOSITES INC.

SUBMITTAL #23-117

08/31/23

Prepared for:
Kusters Zima

Woonsocket RI - Troughs, Weirs, Scum Baffles, Supports Revision 2

PO 101585

84 Railside Road
Toronto, ON M3A 1A3
416-444-4484
www.protectolite.com

PROTECTOLITE™
COMPOSITES INC.

The State of the Part—Customized to Your Needs

LETTER OF TRANSMITTAL

TO: Kusters Zima

DATE: 08/14/23	**JOB NO.: N/A**
ATTENTION: Tim Johnson	**FROM: Andrew Szasz**
RE: Drawings #P1230343	**Qty: 1**
PO: 101585	

WE ARE SENDING YOU ☐ Attached

X Shop Drawings ☐ Prints ☐ Plans ☐ Samples ☐ Specifications
☐ Copy of Letter ☐ Change Order ☐ Returns ☐ RFQ ☐ Reference Dwgs

NO.	DATE	COPIES	DESCRIPTION
1	**7/28/23**	**1**	**BOM & Troughs, Weirs and Baffles**
2		1	Technical Material Data Sheet.
3	08/14/23	1	Revisions as Noted on the drawings per request
4	08/31/23	1	Revisions as Noted on the drawings per request
			PINC Reference: 23-117

THESE ARE TRANSMITTED as checked below:

X For Acceptance ☐ Accepted as submitted ☐ Resubmit_____ copies for acceptance
☐ For your use ☐ Accepted as noted ☐ Submit_____copies for distribution
☐ As requested ☐ Returned for correction ☐ Return_____corrected prints
☐ For review and correction
☐ FOR BIDS DUE _____, ☐ PRINT RETURNED AFTER LOAN TO US

REMARKS

Please feel free to contact me at 416-444-4484 Ext 234 if you have any questions.
Thank you for your consideration.

COPY TO: Karl, Charles

SIGNED: Andrew Szasz

CHEMICAL RESISTANT SHEET **TECHNICAL DATA**

PROTECTOLITE™ SERIES 210 CORR-ISO CORROSION SHEETS are manufactured under high heat and pressure in matched metal moulds. It meets or exceeds CAN/CGSB 41.22 standard. **SERIES 210 CORR-GP** sheet is an excellent premium grade isophthalic resin, with UV inhibitors, fiberglass, filled composite laminate. Suitable for use in tanks, baffles, weir plates, ducting, spacers, pipes, and other components requiring light weight, low maintenance, higher service anti-corrosive properties.

PROPERTIES:	VALUES:	METHOD:
TENSILE STRENGTH	**14-15,000 psi**	**ASTM D638**
FLEXURAL STRENGHT	**25-27,000 psi**	**ASTM D790**
FLEXURAL MODULUS	**1.0 x 10^6 psi**	**ASTM D790**
COMPRESSIVE STRENGTH	**30,000 psi**	**ASTM D790**
BARCOL HARDNESS	**40-45**	**ASTM D2583**
IZOD IMPACT, notched	**> 12 ft-lb./in.**	**ASTM D256**
WATER ABSORPTION (24 Hours @ 230C)	**< 0.1%**	**ASTM D570**
SPECIFIC GRAVITY	**1.5 ± 0.05**	**ASTM D792**
STANDARD COLOUR	**HAZE -GREY (Other colours available)**	
ARC RESISTANCE	**130 sec**	**ASTM D495**
DIELECTRIC STRENGTH	**475 VPM**	**ASTM D149**
DIELECTRIC CONSTANT, 60Hz	**4.5**	**ASTM D150**
AVERAGE COEFFICIENT OF THERMAL EXPANSION (Inch/ Inch/°F	**10.5 x 10^-6**	**ASTM D696**
STANDARD SIZES	**36”x 72”; 48”x 96”**	
STANDARD THICKNESS	**1/16” through 6”**	

The property values shown are based upon tests believed to be reliable. However, no liability is assumed resulting from their use. We suggest that the user perform tests in order to establish the material’s suitability for the specific application.

July 2022

Protectolite Composites Inc. • 84 Railside Road • Toronto, Ontario M3A 1A3 • p 416-444-4484 • f 416-444-4485
kszasz@protectolite.com • www.protectolite.com

BILL OF MATERIAL			
ITEM NUMBER	PART NAME/DESCRIPTION	MATERIAL	QTY(1 TANK)
1	FRP LAUNDER TROUGH, 12"(W) x 12 (I.H) x 18"(O.H) x 1/4", 94"LG	HAND LAYUP ISOPHTHALIC POLYESTER UV STABILIZED	23
2	FRP DROP BOX TROUGH, 12"(W) x 12 (I.H) x 18"(O.H) x 1/4", 94"LG WITH 18"DIA DROP BOX	HAND LAYUP ISOPHTHALIC POLYESTER UV STABILIZED	1
3	FRP FLANGE KIT FOR LAST SHORT PIECE 3.25x15.25"x17.25x21.25", 1/4" THK	HAND LAYUP ISOPHTHALIC POLYESTER UV STABILIZED	1
4	FRP WASHER FOR JOINT TROUGH AND SUPPORT 5"DIA x1/4"	ISOPHTHALIC POLYESTER UV STABILIZED	96
5	FRP ROUND TUBE 1.0"x1/8", 11.80" LG	ISOPHTHALIC POLYESTER UV STABILIZED PULTRUSION	48
6	WEIR PLATE 9"x90.33"x1/4	ISOPHTHALIC POLYESTER UV STABILIZED	24
7	WEIR KEEPER PLATE 5"DIA x 1/4"	ISOPHTHALIC POLYESTER UV STABILIZED	96
8	WEIR SPLICE PLATE 9"x6"x1/4"	ISOPHTHALIC POLYESTER UV STABILIZED	24
9	DRILLING TEMPLATE FOR DROP BOX 25.5"DIA X1/4" WITH (12)9/16" HOLES	ISOPHTHALIC POLYESTER UV STABILIZED	1
10	1/2-13 THREADED ROD, 15-1/4" LONG	STAINLESS STEEL 316	48
11	EPOXY ADHESIVE SET-3G	STRONG TIE SET-3G, 8.5OZ	1
12	1/2" PLASTIC RETAINING CAP	STRONG TIE ARC50A-RP25	12
13	1/2"X5" LG THREADED STUD	STAINLESS STEEL 316	12
14	1/2-13x2.0" LG HEX HEAD BOLT (FOR FLANGE CONNECTION)	STAINLESS STEEL 316	116
15	1/2-13x2-1/4" LG HEX HEAD BOLT (FOR WEIR PLATE)	STAINLESS STEEL 316	96
16	1/2 FENDER WASHER	STAINLESS STEEL 316	204
17	1/2 FLAT WASHER	STAINLESS STEEL 316	424
18	1/2 LOCK WASHER	STAINLESS STEEL 316	308
19	1/2-13 HEX NUT	STAINLESS STEEL 316	320
20	3/8-16x1.5" LG HEX HEAD BOLT (NARROW FLANGE SIDE CONNECTION)	STAINLESS STEEL 316	102
21	3/8 FLAT WASHER	STAINLESS STEEL 316	204
22	3/8 LOCK WASHER	STAINLESS STEEL 316	102
23	3/8-16 HEX NUT	STAINLESS STEEL 316	102
24	GASKET 3.25"x15.25"x17.25x21.25"x2" , 1/4" THK CUSTOM U-SHAPED	SC41 SPONGE NEOPRENE GASKET ADHESIVE BACKING	25
25	GASKET 5"DIA x 1/4" FRP WASHER FOR JOINT TROUGH AND SUPPORT 9/16" HOLE	SC41 SPONGE NEOPRENE GASKET ADHESIVE BACKING	96
26	GASKET 3"x44"x1/4" FOR FLANGE KIT	SC41 SPONGE NEOPRENE GASKET ADHESIVE BACKING	1
27	GASKET 4"x90.79x1/4" FOR WEIR PLATE	SC41 SPONGE NEOPRENE GASKET ADHESIVE BACKING	24
28	GASKET 4"x26"O.Dx18"I.Dx1/4" FOR DROP BOX OUTLET	SC41 SPONGE NEOPRENE GASKET ADHESIVE BACKING	2
29	SEALER	ONE GALLON	1

ZONE	REV.	DESCRIPTION	DATE	APPROVED
	2	ADDED DROP BOX (PAGE 6 OF 23), CHANGED ELEVATION OF FRP ROUND TUBE ASSEMBLY, UPDATED BILL OF MATERIAL, MODIFIED FRP ROUND TUBE ASSEMBLY LOCATION,	8/28/2023	Y.L.
	1	CHANGED TROUGH OUTER HEIGHT FROM 12" TO 18", UPDATED BOM ACCORDING TO CHANGES	8/11/2023	Y.L.
	0	INITIAL DRAWINGS	7/28/2023	Y.L.

REVISIONS

PROPRIETARY AND CONFIDENTIAL

THE INFORMATION CONTAINED IN THIS DRAWING IS THE SOLE PROPERTY OF PROTECTOLITE COMPOSITES INC. ANY REPRODUCTION IN PART OR AS A WHOLE WITHOUT THE WRITTEN PERMISSION OF PROTECTOLITE COMPOSITES INC IS PROHIBITED.

UNLESS OTHERWISE SPECIFIED:

DIMENSIONS ARE IN INCHES
TOLERANCES:
ANGULAR: ±1°
TWO PLACE DECIMAL ± 1/16"
THREE PLACE DECIMAL ± 1/32"

INTERPRET GEOMETRIC TOLERANCING PER:

MATERIAL

FINISH

DO NOT SCALE DRAWING

	NAME	DATE
DRAWN	S.H.	7/28/23
CHECKED	C.X.	7/28/23
ENG APPR.		
MFG APPR.		
Q.A.		

COMMENTS:
PROJECT: WOONSOCKET, RI
60' DIAMETER THICKENER TANK
WO#: 1230343
REF#: 23-117

PROTECTOLITE™ COMPOSITES INC.

TITLE:
BILL OF MATERIAL - TROUGH AND WEIR

SIZE	DWG. NO.	REV
B	P1230343 TR	2

SCALE: 1:1 | WEIGHT: | SHEET 1 OF 23

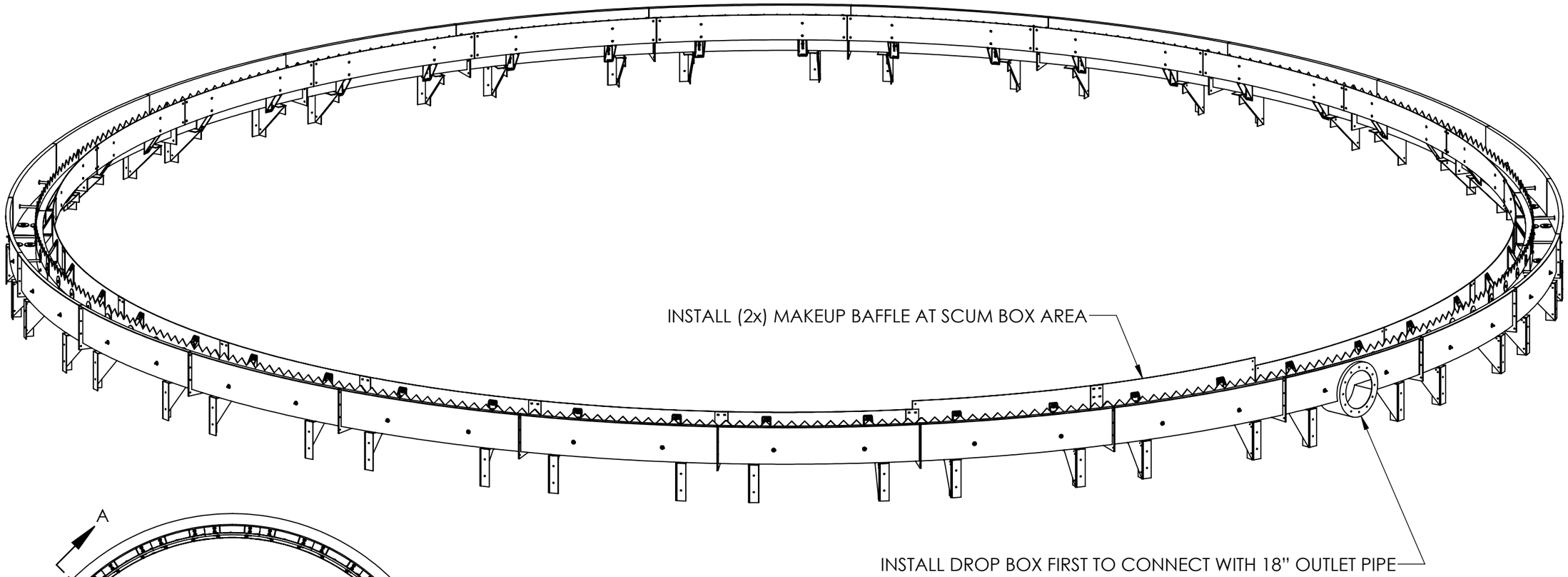

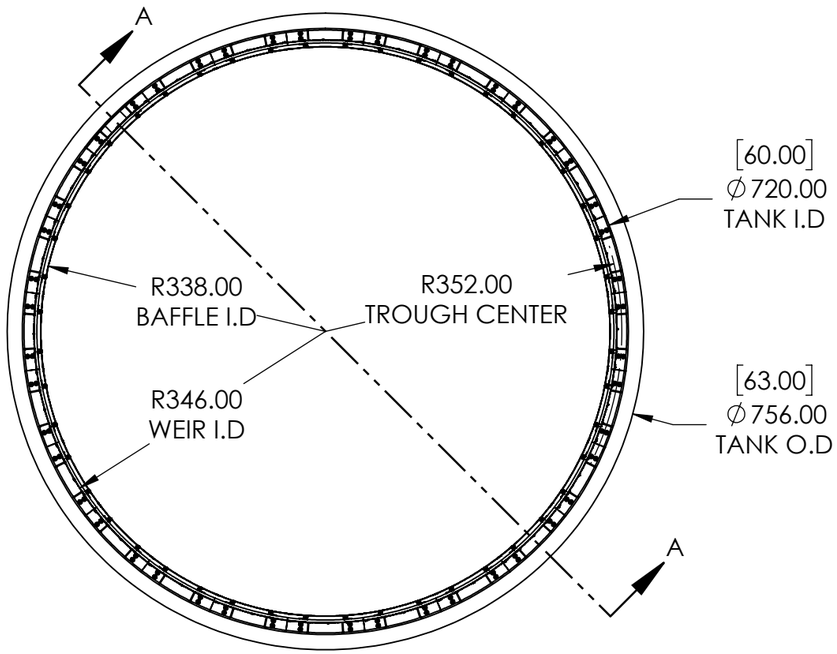

NOTE:
1. INSTALL DROP BOX FIRST TO BE JOINT WITH OUTLET PIPE
2. LAST PIECE OF TROUGH MAY BE FIELD CUT REQUIRED TO FIT IN
3. IF TRIM NEEDED FOR NOTE#2, USE FLANGE KIT (PAGE 7 OF 22) AFTER TRIMMING
4. IF LESS THAN 1/4"GAP LEFT BETWEEN LAST TROUGH AND FIRST INSTALLED TROUGH USE TWO U-SHAPED GASKET AT LAST FLANGE TO FIT
5. MAKEUP BAFFLE PANELS SHALL BE INSTALLED AT SCUM BOX AREA

PROPRIETARY AND CONFIDENTIAL

THE INFORMATION CONTAINED IN THIS DRAWING IS THE SOLE PROPERTY OF PROTECTOLITE COMPOSITES INC. ANY REPRODUCTION IN PART OR AS A WHOLE WITHOUT THE WRITTEN PERMISSION OF PROTECTOLITE COMPOSITES INC IS PROHIBITED.

UNLESS OTHERWISE SPECIFIED:

DIMENSIONS ARE IN INCHES
TOLERANCES:
ANGULAR: ±1°
TWO PLACE DECIMAL ± 1/16"
THREE PLACE DECIMAL ± 1/32"

INTERPRET GEOMETRIC TOLERANCING PER:

MATERIAL

FINISH

DO NOT SCALE DRAWING

	NAME	DATE
DRAWN	S.H.	7/28/23
CHECKED	C.X.	7/28/23
ENG APPR.		
MFG APPR.		
Q.A.		

COMMENTS:
PROJECT: WOONSOCKET, RI
60' DIAMETER THICKENER TANK
WO#: 1230343
REF#: 23-117

PROTECTOLITE™ COMPOSITES INC.

TITLE:
TANK LAYOUT

SIZE	DWG. NO.	REV
B	P1230343 TR	2

SCALE: 1:180 WEIGHT: SHEET 2 OF 23

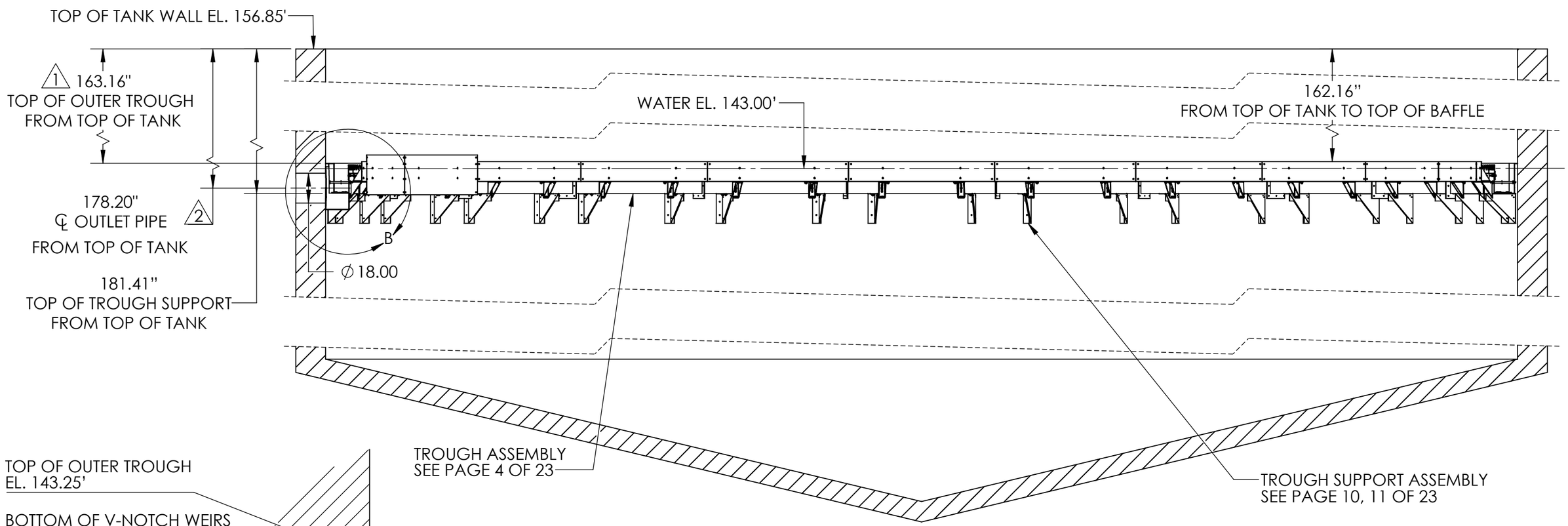

SECTION A-A
SCALE 1 : 60

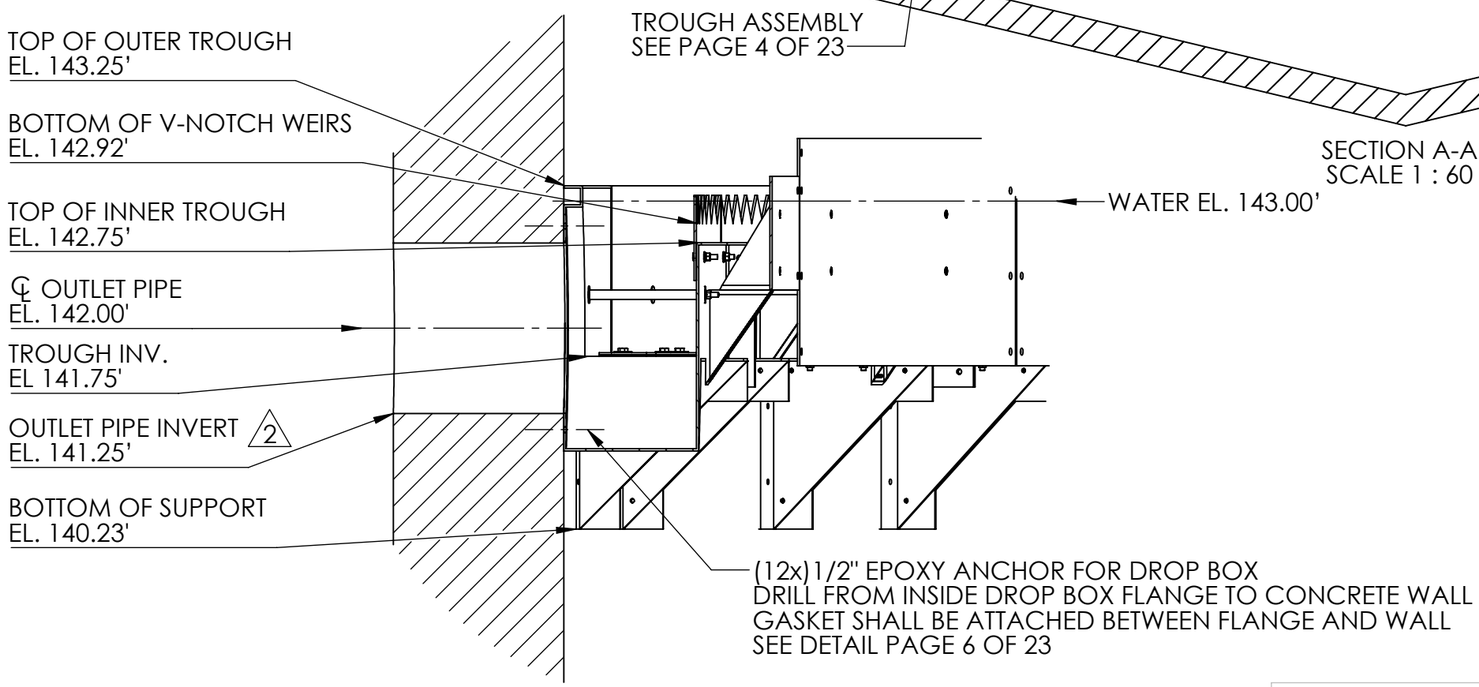

DETAIL B
SCALE 1 : 16

ZONE	REV.	DESCRIPTION	DATE	APPROVED
A4, B4	2	UPDATED ELEVATION, ADDED OUTLET PIPE OPENING	8/28/2023	Y.L.
B4	1	CHANGED OUTER TROUGH HEIGHT	8/11/2023	Y.L.
	0	INITIAL DRAWINGS	7/28/2023	Y.L.

REVISIONS

UNLESS OTHERWISE SPECIFIED:

DIMENSIONS ARE IN INCHES
TOLERANCES:
ANGULAR: ±1°
TWO PLACE DECIMAL ± 1/16"
THREE PLACE DECIMAL ± 1/32"

INTERPRET GEOMETRIC TOLERANCING PER:

MATERIAL

FINISH

DO NOT SCALE DRAWING

	NAME	DATE
DRAWN	S.H.	7/28/23
CHECKED	C.X.	7/28/23
ENG APPR.		
MFG APPR.		
Q.A.		

COMMENTS:
PROJECT: WOONSOCKET, RI
60' DIAMETER THICKENER TANK
WO#: 1230343
REF#: 23-117

PROPRIETARY AND CONFIDENTIAL
THE INFORMATION CONTAINED IN THIS DRAWING IS THE SOLE PROPERTY OF PROTECTOLITE COMPOSITES INC. ANY REPRODUCTION IN PART OR AS A WHOLE WITHOUT THE WRITTEN PERMISSION OF PROTECTOLITE COMPOSITES INC IS PROHIBITED.

PROTECTOLITE™ COMPOSITES INC.

TITLE:
TROUGH INSTALLATION LAYOUT

SIZE	DWG. NO.	REV
B	P1230343 TR	2

SCALE: 1:60 | WEIGHT: | SHEET 3 OF 23

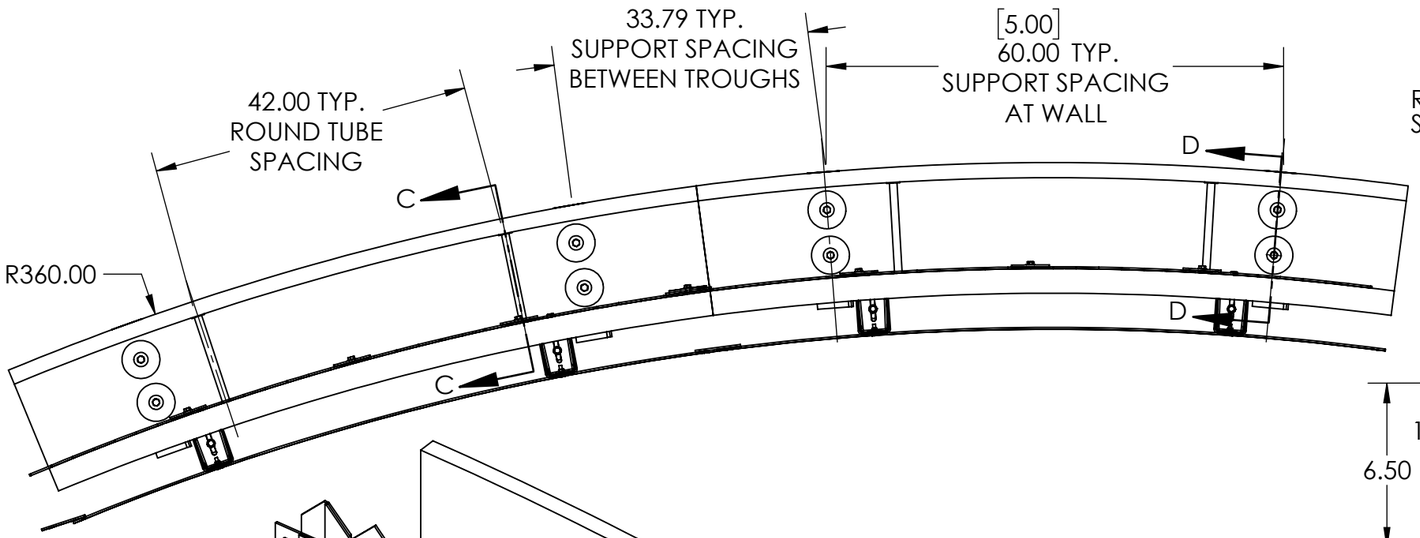

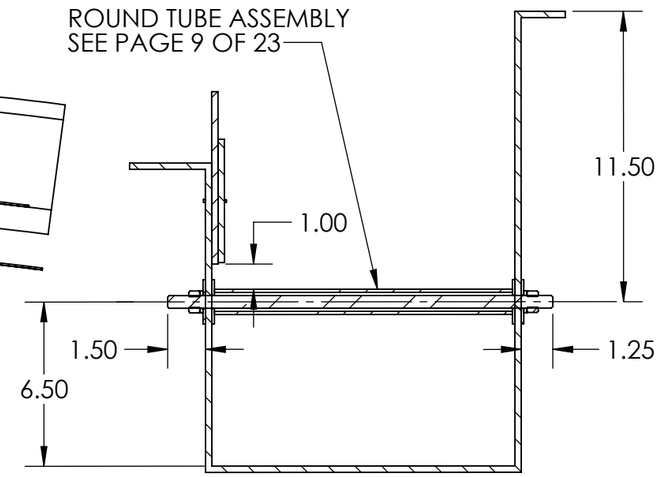

SECTION C-C
SCALE 1 : 6

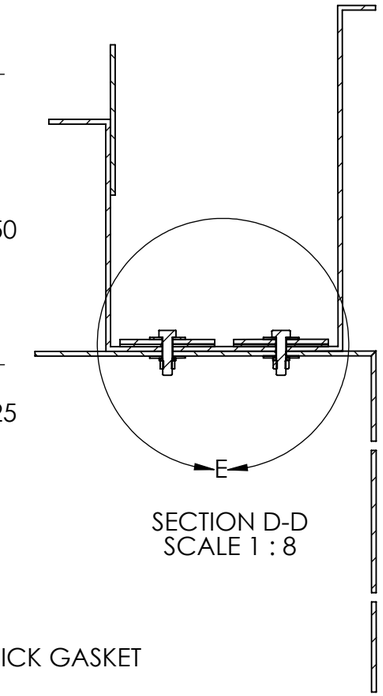

SECTION D-D
SCALE 1 : 8

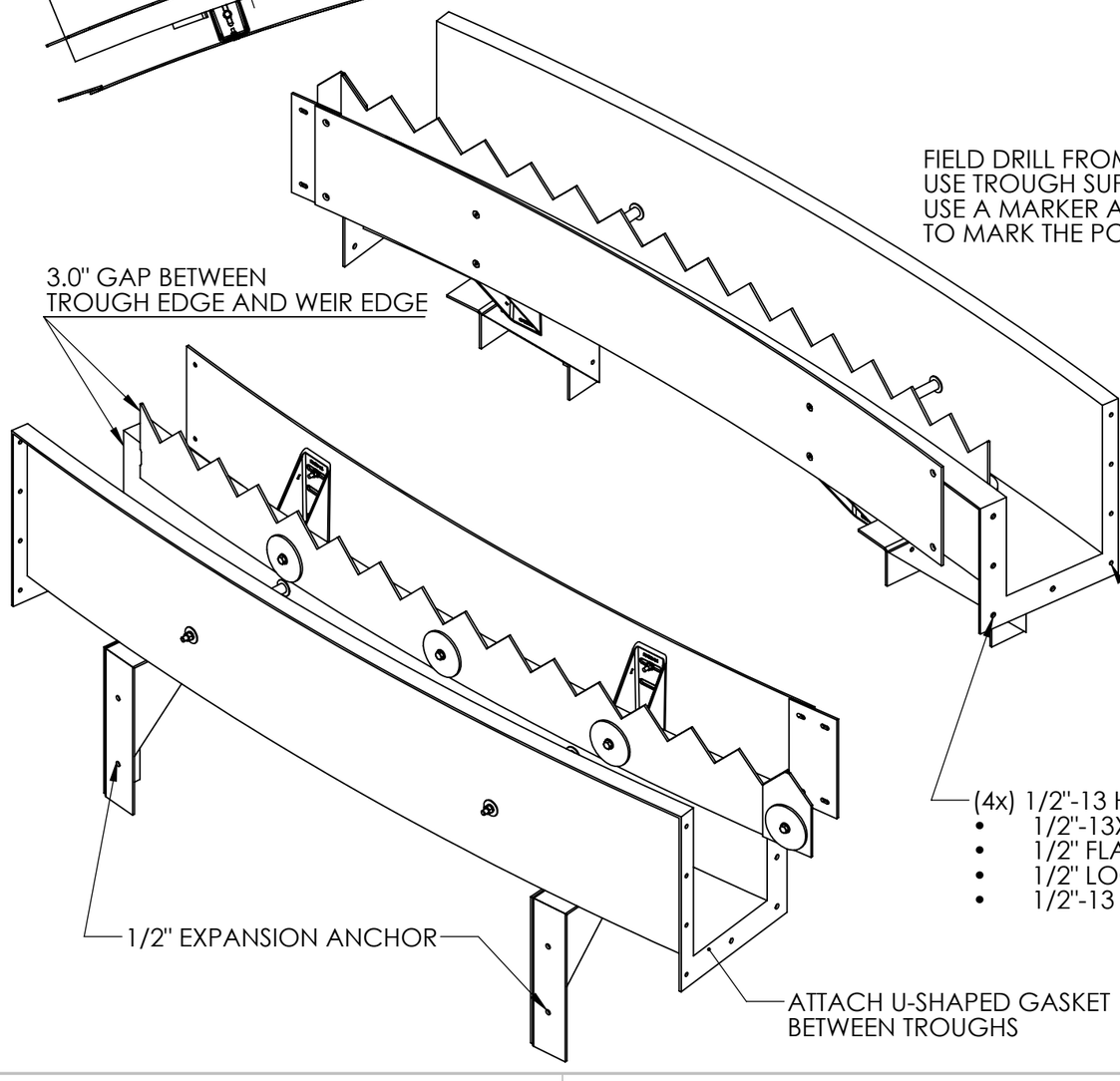

FIELD DRILL FROM BOTTOM OF TROUGH (USE 9/16" DRILL)
USE TROUGH SUPPORT AS A DRILLING TEMPLATE
USE A MARKER AND TRACE UNDERNEATH SUPPORT
TO MARK THE POSITION OF THE HOLE FOR DRILLING

(4x) 3/8"-16 FLAT HEAD SCREW SET
- 3/8"-16X1-1/2"LG FLAT HEAD SOCKET CAP SCREW x1
- 3/8" FLAT WASHER x2
- 3/8" LOCK WASHER x1
- 3/8"-16 HEX NUT x1

(4x) 1/2"-13 HHB SET
- 1/2"-13X2.0"LG HEX HEAD BOLT x1
- 1/2" FLAT WASHER x2
- 1/2" LOCK WASHER x1
- 1/2"-13 HEX NUT x1

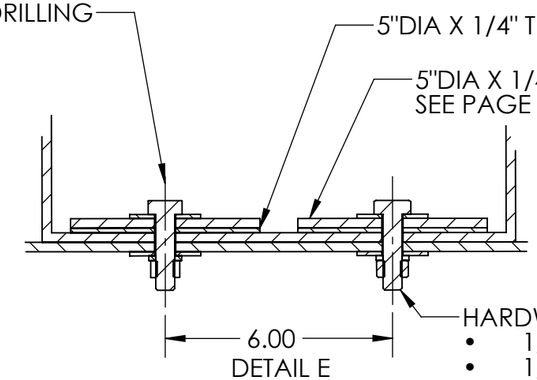

DETAIL E
SCALE 1 : 4

HARDWARE LIST IN ORDER FROM THE TOP
- 1/2"-13X2-1/4"LG HEX HEAD BOLT
- 1/2" FENDER WASHER
- ∅5"X1/4" FRP WASHER
- ∅5"X1/4" GASKET
- 1/2" FENDER WASHER
- 1/2" LOCK WASHER
- 1/2"-13 HEX NUT

UNLESS OTHERWISE SPECIFIED:		NAME	DATE
DIMENSIONS ARE IN INCHES TOLERANCES: ANGULAR: ±1° TWO PLACE DECIMAL ± 1/16" THREE PLACE DECIMAL ± 1/32"	DRAWN	S.H.	7/28/23
	CHECKED	C.X.	7/28/23
	ENG APPR.		
	MFG APPR.		
INTERPRET GEOMETRIC TOLERANCING PER:	Q.A.		
MATERIAL	COMMENTS: PROJECT: WOONSOCKET, RI 60' DIAMETER THICKENER TANK WO#: 1230343 REF#: 23-117		
FINISH			
DO NOT SCALE DRAWING			

PROPRIETARY AND CONFIDENTIAL

THE INFORMATION CONTAINED IN THIS DRAWING IS THE SOLE PROPERTY OF PROTECTOLITE COMPOSITES INC. ANY REPRODUCTION IN PART OR AS A WHOLE WITHOUT THE WRITTEN PERMISSION OF PROTECTOLITE COMPOSITES INC IS PROHIBITED.

PROTECTOLITE™ COMPOSITES INC.

TITLE:

TROUGH ASSEMBLY

SIZE	DWG. NO.	REV
B	P1230343 TR	2
SCALE: 1:20	WEIGHT:	SHEET 4 OF 23

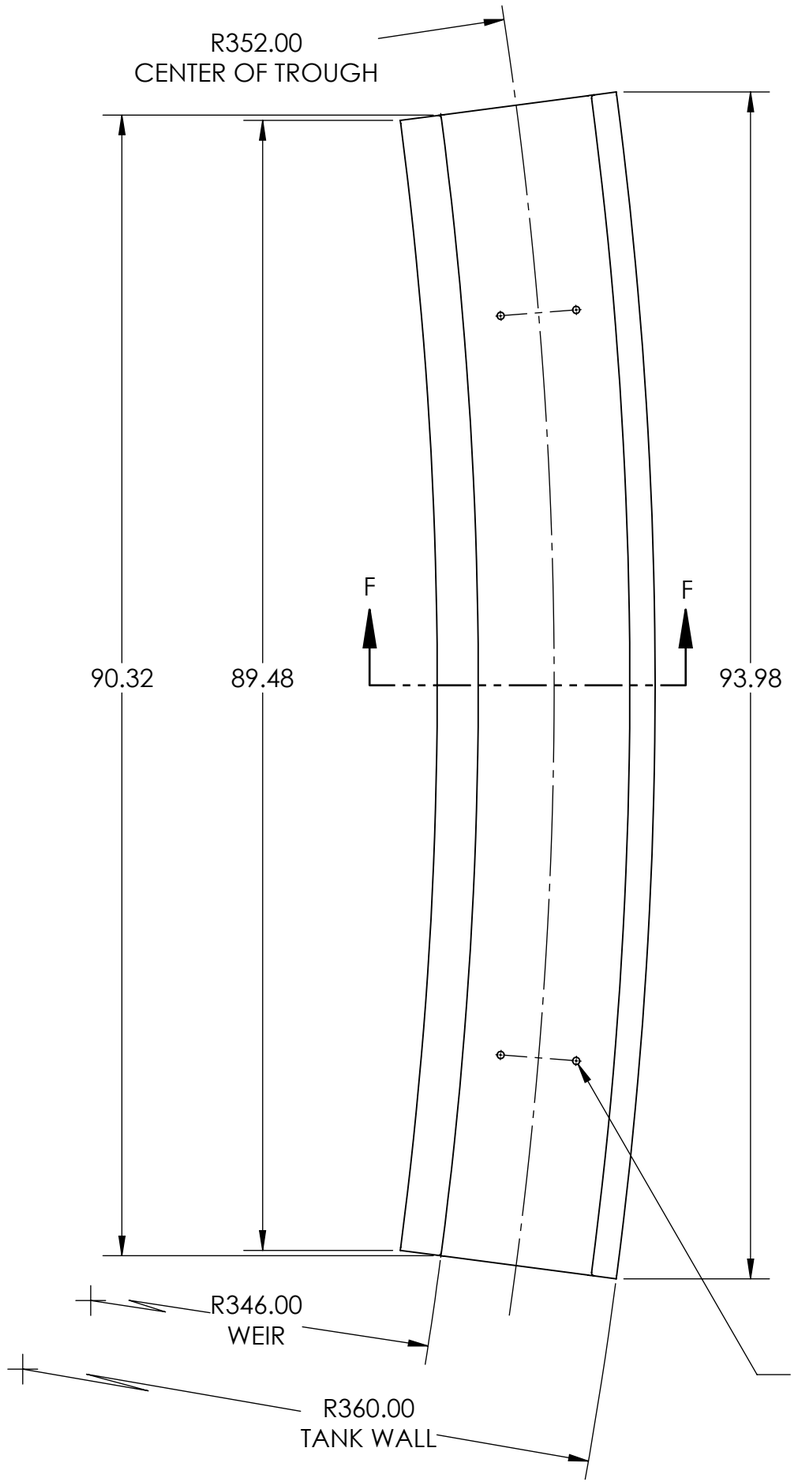

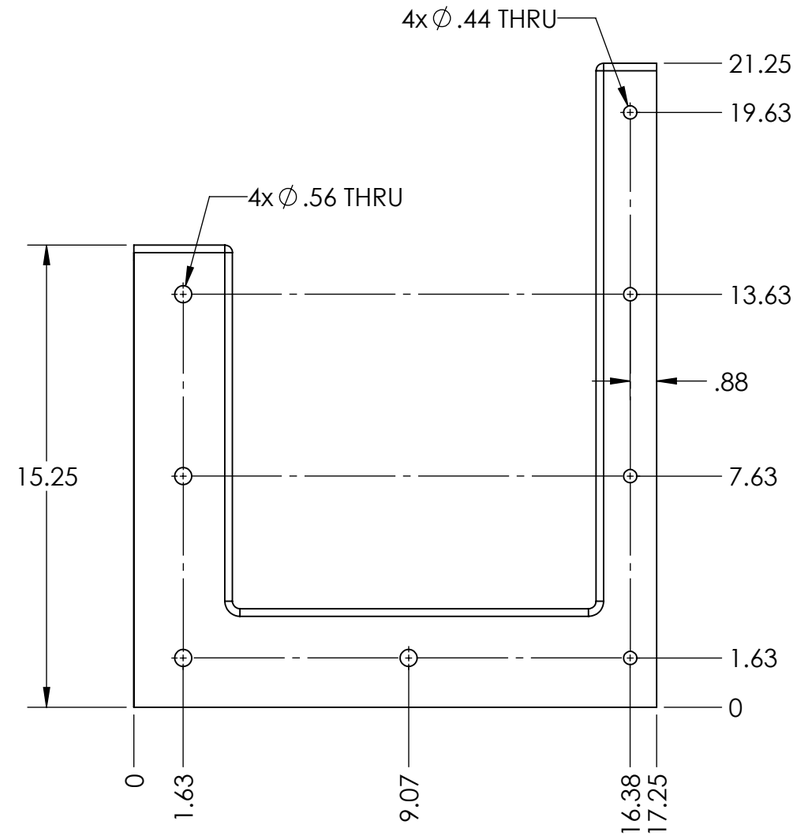

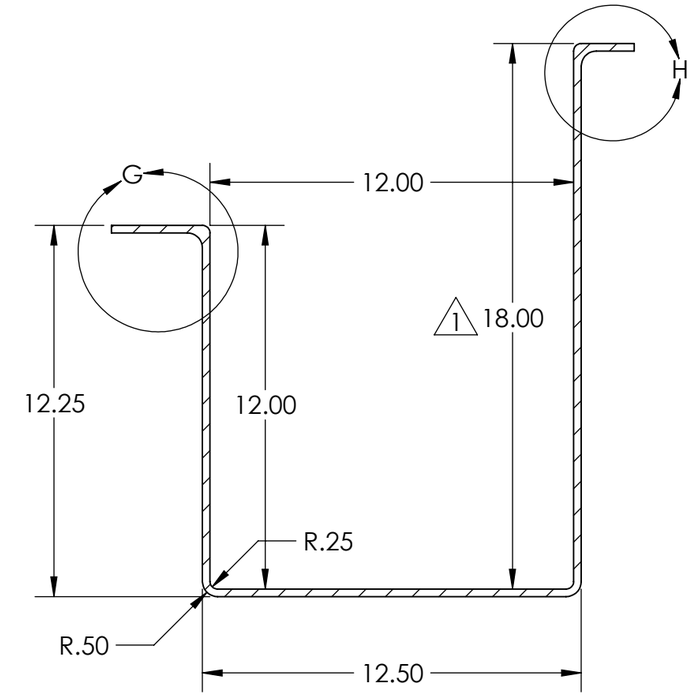

SECTION F-F
SCALE 1 : 5

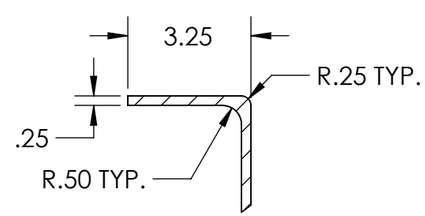

DETAIL G
SCALE 1 : 4

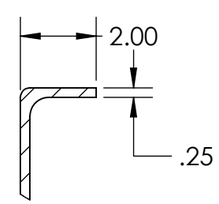

DETAIL H
SCALE 1 : 4

4X ∅ .56 THRU FIELD DRILL
BOLT THRU TROUGH SUPPORT
USE 1/2"-13X2-1/4"LG HHB SET
SEE DETAIL PAGE 11 OF 23

ZONE	REV.	DESCRIPTION	DATE	APPROVED
B1	1	CHANGED TROUGH OUTER HEIGHT	8/11/2023	Y.L.
	0	INITIAL DRAWINGS	7/28/2023	Y.L.

REVISIONS

UNLESS OTHERWISE SPECIFIED:

DIMENSIONS ARE IN INCHES
TOLERANCES:
ANGULAR: ± 1°
TWO PLACE DECIMAL ± 1/16"
THREE PLACE DECIMAL ± 1/32"

INTERPRET GEOMETRIC TOLERANCING PER:

MATERIAL

FINISH

DO NOT SCALE DRAWING

	NAME	DATE
DRAWN	S.H.	7/28/23
CHECKED	C.X.	7/28/23
ENG APPR.		
MFG APPR.		
Q.A.		

COMMENTS:
PROJECT: WOONSOCKET, RI
60' DIAMETER THICKENER TANK
WO#: 1230343
REF#: 23-117

PROPRIETARY AND CONFIDENTIAL
THE INFORMATION CONTAINED IN THIS DRAWING IS THE SOLE PROPERTY OF PROTECTOLITE COMPOSITES INC. ANY REPRODUCTION IN PART OR AS A WHOLE WITHOUT THE WRITTEN PERMISSION OF PROTECTOLITE COMPOSITES INC IS PROHIBITED.

PROTECTOLITE™
COMPOSITES INC.

TITLE:
TROUGH

SIZE	DWG. NO.	REV
B	P1230343 TR	2

SCALE: 1:12 WEIGHT: SHEET 5 OF 23

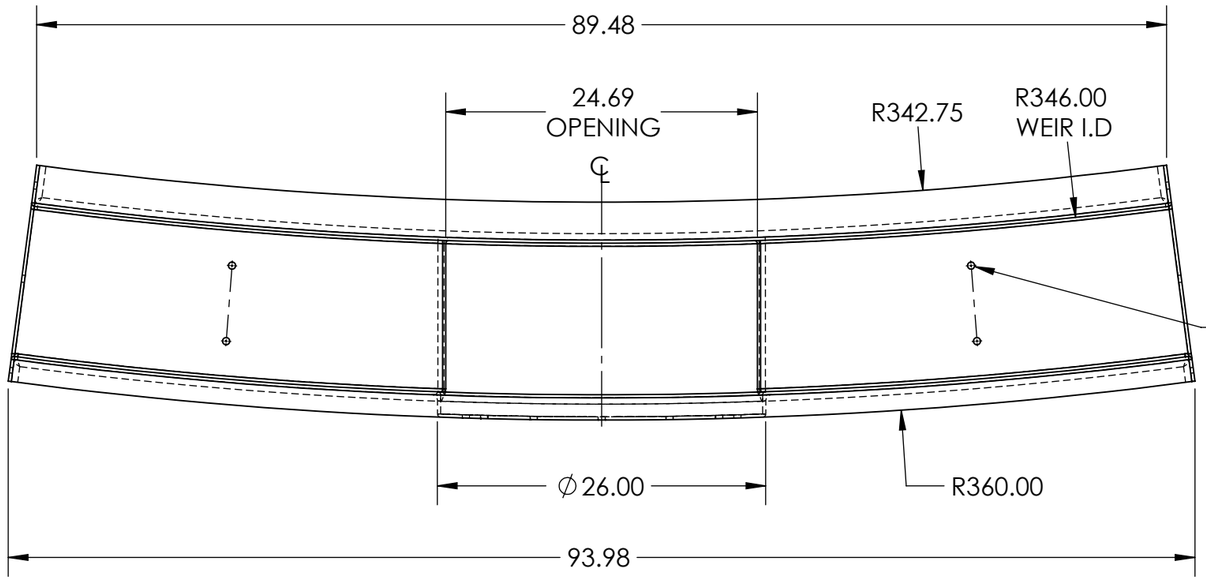

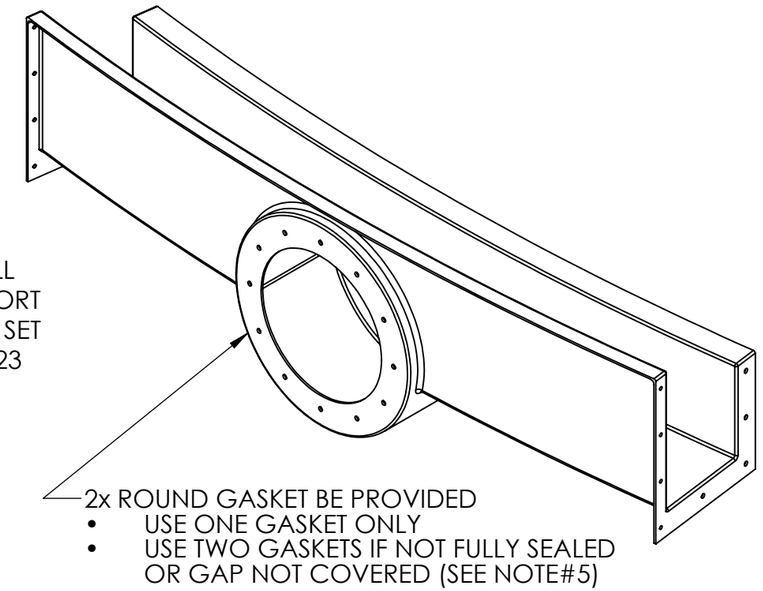

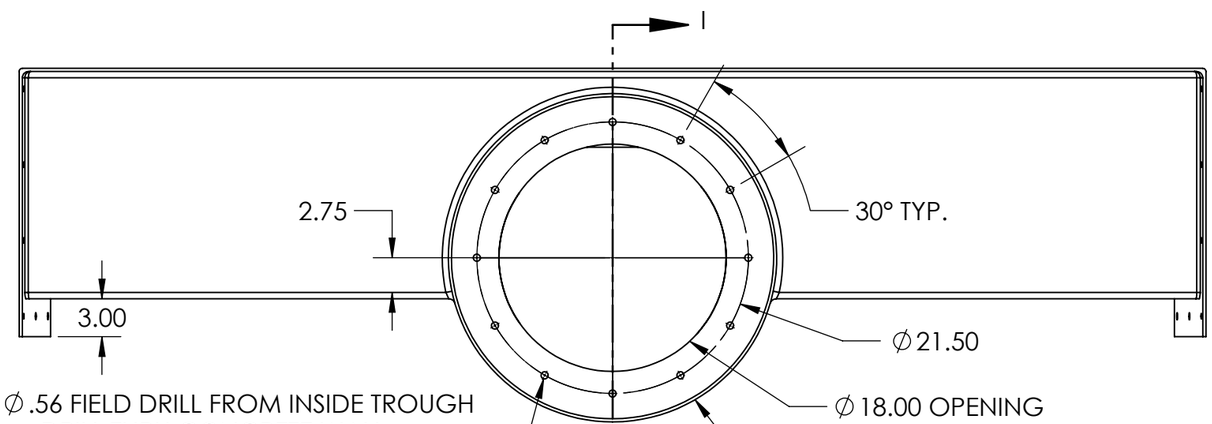

12x ∅.56 FIELD DRILL FROM INSIDE TROUGH
DRILL THRU CONCRETE WALL
(USE PROVIDED DRILL TEMPLATE)
USE 1/2" EPOXY ANCHOR
MIN EMBEDMENT 2-3/4"
MIN EDGE DISTANCE 1-3/4"

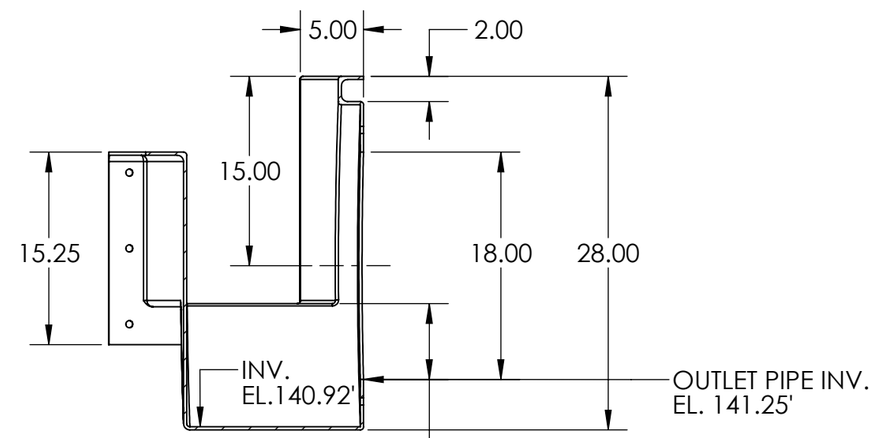

SECTION I-I

6.00 BETWEEN
TROUGH INV. AND PIPE INV.

NOTE:
1. CONCRETE WALL SHALL BE SANDED BEFORE INSTALLATION
2. DROP BOX TROUGH SHALL BE INSTALLED FIRST TO BE ALIGNED WITH OUTLET PIPE
3. DRILL TEMPLATE FOR ANCHORING TO CONCRETE WILL BE PROVIDED
4. ROUND GASKET SHALL BE INSTALLED BETWEEN FLANGE AND WALL TO BE SEALED
5. IF GAP BETWEEN FLANGE AND WALL NOT COVERED BY ONE GASKET, USE EXTRA GASKET

PROPRIETARY AND CONFIDENTIAL
THE INFORMATION CONTAINED IN THIS DRAWING IS THE SOLE PROPERTY OF PROTECTOLITE COMPOSITES INC. ANY REPRODUCTION IN PART OR AS A WHOLE WITHOUT THE WRITTEN PERMISSION OF PROTECTOLITE COMPOSITES INC IS PROHIBITED.

UNLESS OTHERWISE SPECIFIED:
DIMENSIONS ARE IN INCHES
TOLERANCES:
ANGULAR: ±1°
TWO PLACE DECIMAL ± 1/16"
THREE PLACE DECIMAL ± 1/32"
INTERPRET GEOMETRIC TOLERANCING PER:
MATERIAL
FINISH
DO NOT SCALE DRAWING

	NAME	DATE
DRAWN	S.H.	7/28/23
CHECKED	C.X.	7/28/23
ENG APPR.		
MFG APPR.		
Q.A.		

COMMENTS:
PROJECT: WOONSOCKET, RI
60' DIAMETER THICKENER TANK
WO#: 1230343
REF#: 23-117

PROTECTOLITE COMPOSITES INC.

TITLE:
TROUGH WITH DROP BOX

SIZE	DWG. NO.	REV
B	P1230343 TR	2

SCALE: 1:12 | WEIGHT: | SHEET 6 OF 23

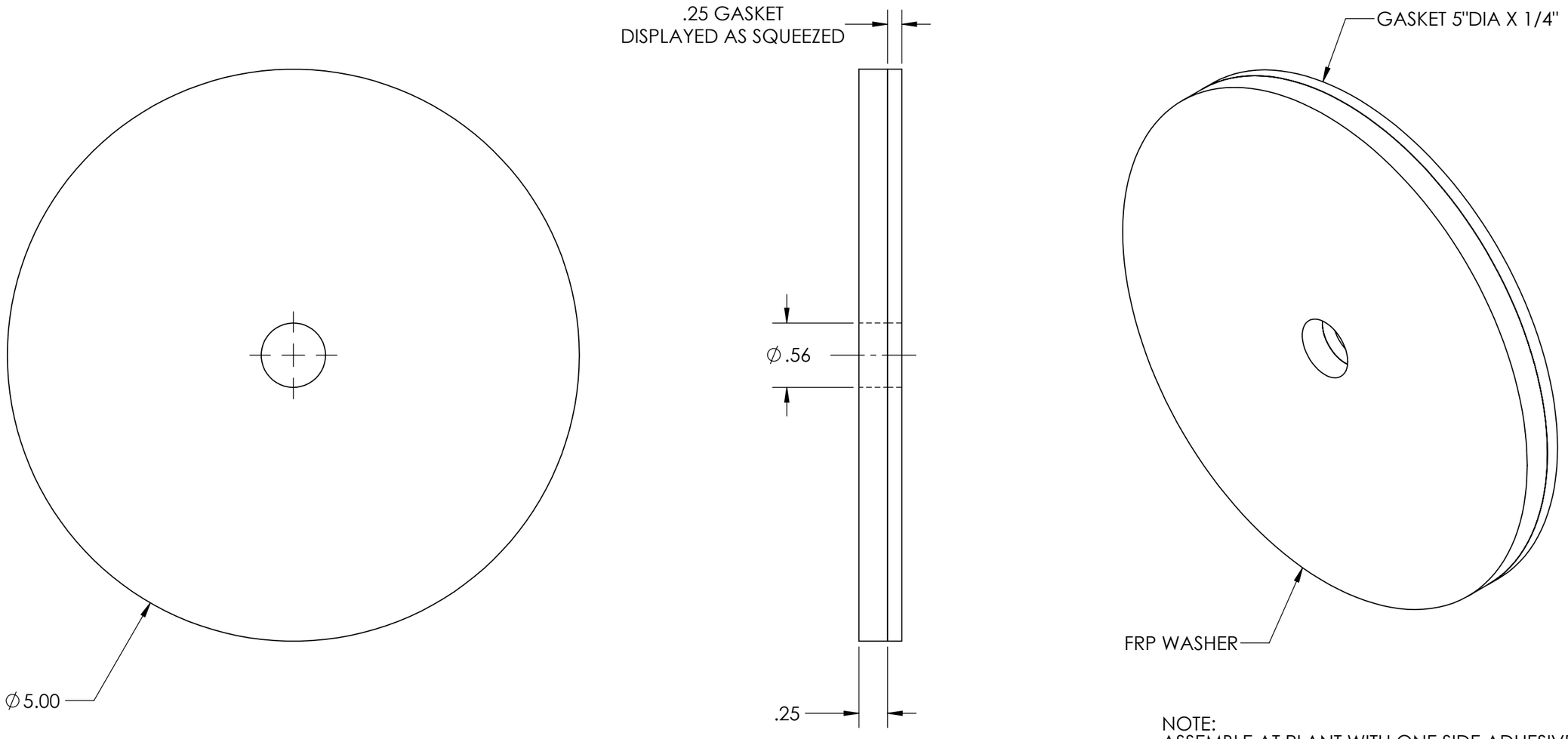

NOTE:
ASSEMBLE AT PLANT WITH ONE SIDE ADHESIVE GASKET

UNLESS OTHERWISE SPECIFIED:

DIMENSIONS ARE IN INCHES
TOLERANCES:
ANGULAR: ±1°
TWO PLACE DECIMAL ± 1/16"
THREE PLACE DECIMAL ± 1/32"

INTERPRET GEOMETRIC TOLERANCING PER:

MATERIAL

FINISH

DO NOT SCALE DRAWING

	NAME	DATE
DRAWN	S.H.	7/28/23
CHECKED	C.X.	7/28/23
ENG APPR.		
MFG APPR.		
Q.A.		

COMMENTS:
PROJECT: WOONSOCKET, RI
60' DIAMETER THICKENER TANK
WO#: 1230343
REF#: 23-117

PROPRIETARY AND CONFIDENTIAL

THE INFORMATION CONTAINED IN THIS DRAWING IS THE SOLE PROPERTY OF PROTECTOLITE COMPOSITES INC. ANY REPRODUCTION IN PART OR AS A WHOLE WITHOUT THE WRITTEN PERMISSION OF PROTECTOLITE COMPOSITES INC IS PROHIBITED.

PROTECTOLITE™ COMPOSITES INC.

TITLE:
FRP WASHER FOR TROUGH & SUPPORT

SIZE	DWG. NO.	REV
B	P1230343 TR	2

SCALE: 1:1 | WEIGHT: | SHEET 7 OF 23

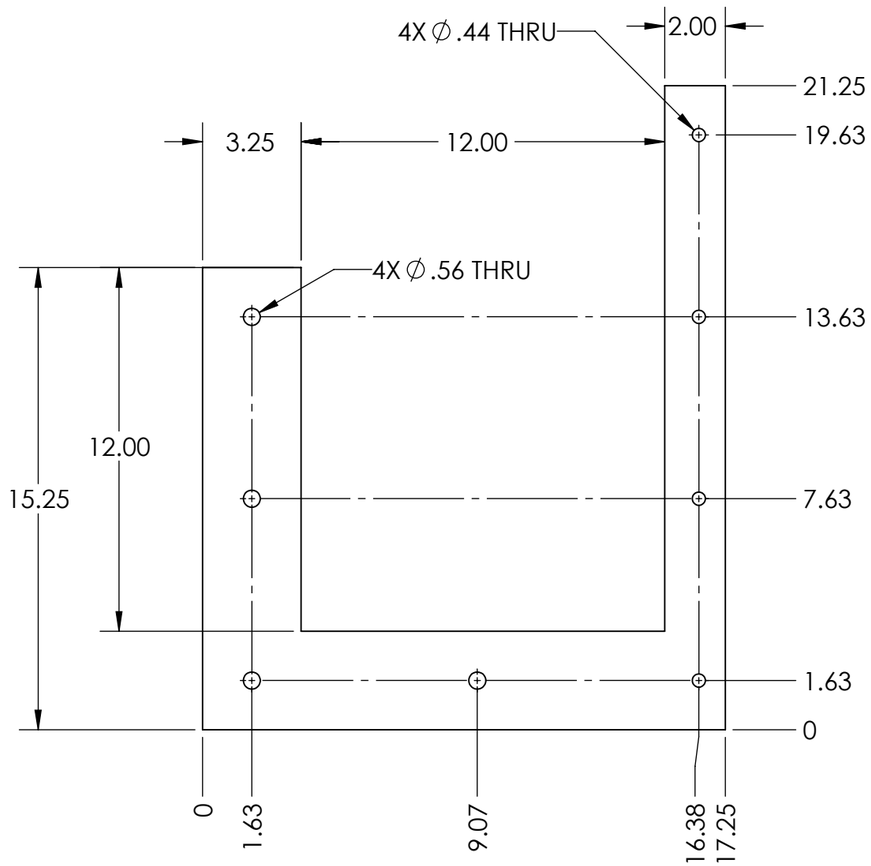

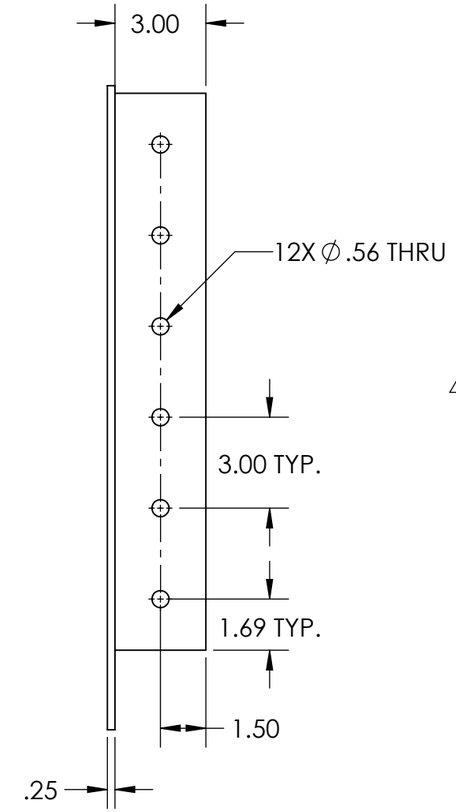

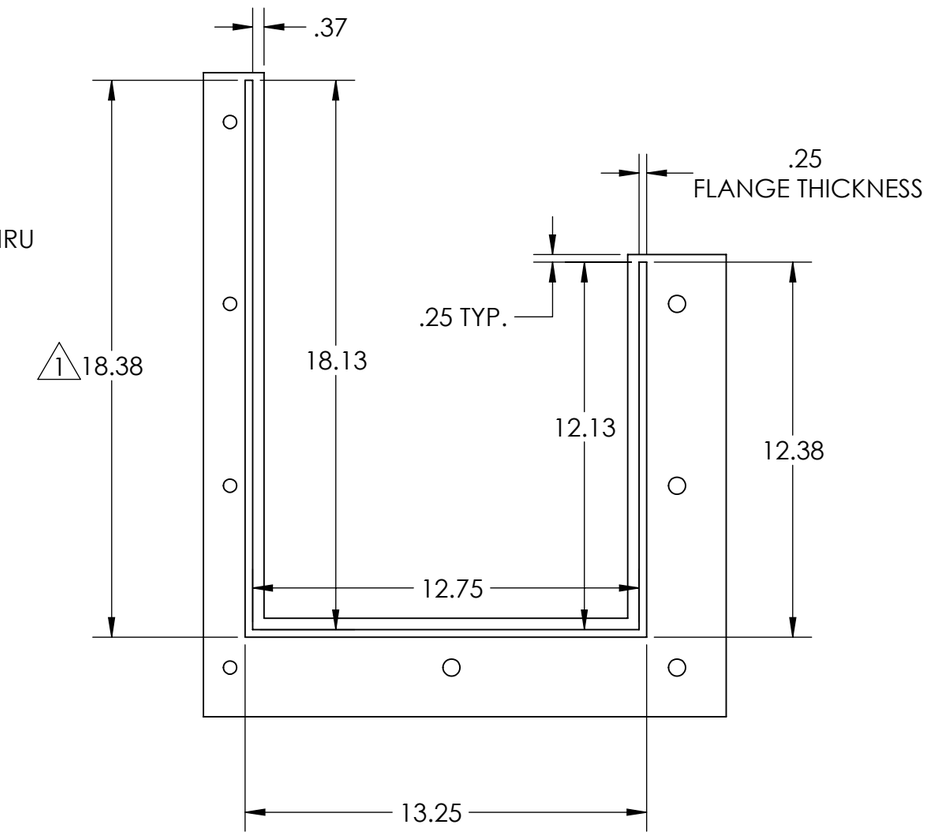

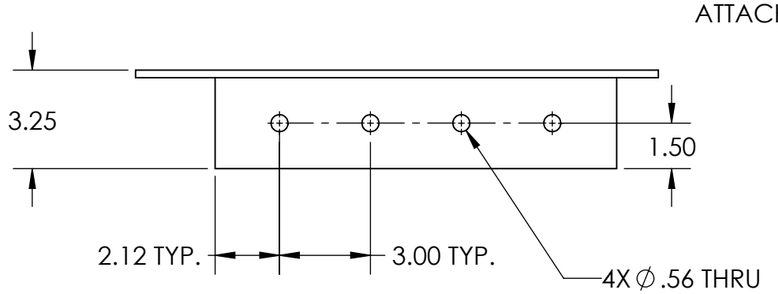

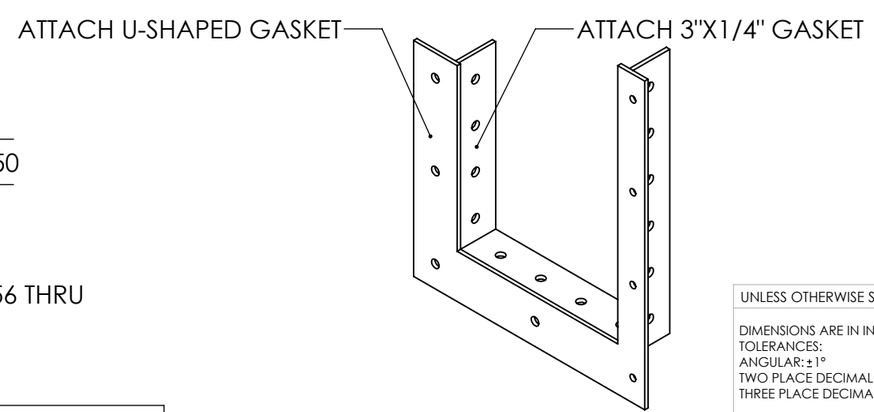

NOTE:
1. USE FLANGE KIT IF TRIM IS REQUIRED FOR LAST TROUGH
2. BOLT THRU LAST TROUGH AT TRIMMED SIDE
3. USE SIKA-FLEX ALL AROUND THE JOINT AREA

ZONE	REV.	DESCRIPTION	DATE	APPROVED
B2	1	CHANGED FLANGE HEIGHT AT WALL SIDE	8/11/2023	Y.L.
	0	INITIAL DRAWINGS	7/28/2023	Y.L.

REVISIONS

PROPRIETARY AND CONFIDENTIAL

THE INFORMATION CONTAINED IN THIS DRAWING IS THE SOLE PROPERTY OF PROTECTOLITE COMPOSITES INC. ANY REPRODUCTION IN PART OR AS A WHOLE WITHOUT THE WRITTEN PERMISSION OF PROTECTOLITE COMPOSITES INC IS PROHIBITED.

UNLESS OTHERWISE SPECIFIED:

DIMENSIONS ARE IN INCHES
TOLERANCES:
ANGULAR: ±1°
TWO PLACE DECIMAL ± 1/16"
THREE PLACE DECIMAL ± 1/32"

INTERPRET GEOMETRIC TOLERANCING PER:

MATERIAL

FINISH

DO NOT SCALE DRAWING

	NAME	DATE
DRAWN	S.H.	7/28/23
CHECKED	C.X.	7/28/23
ENG APPR.		
MFG APPR.		
Q.A.		

COMMENTS:
PROJECT: WOONSOCKET, RI
60' DIAMETER THICKENER TANK
WO#: 1230343
REF#: 23-117

PROTECTOLITE COMPOSITES INC.

TITLE:
FLANGE KIT FOR LAST TROUGH

SIZE B | DWG. NO. P1230343 TR | REV 2

SCALE: 1:5 | WEIGHT: | SHEET 8 OF 23

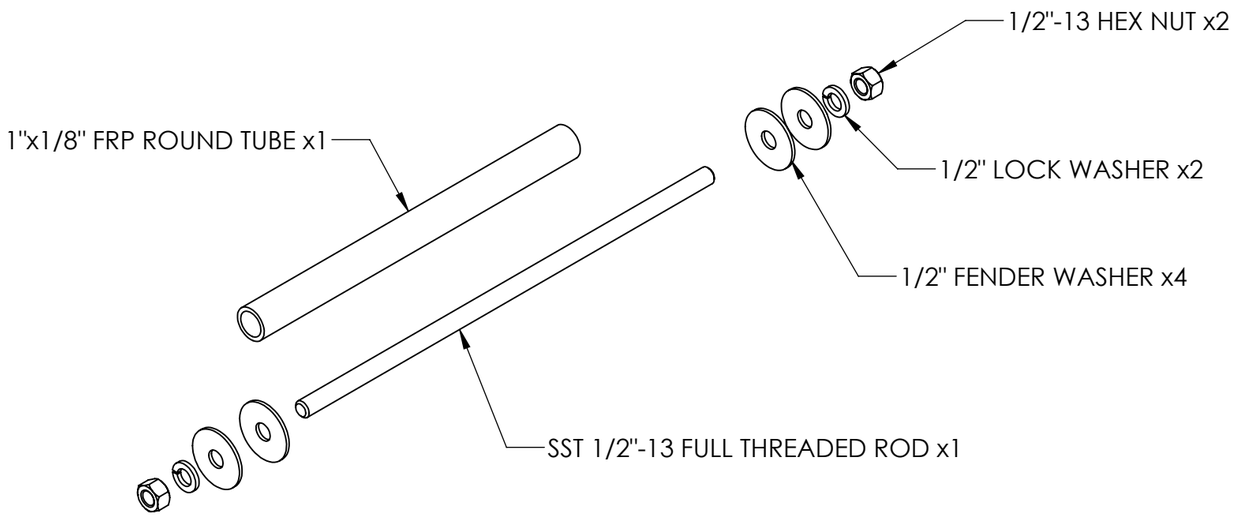

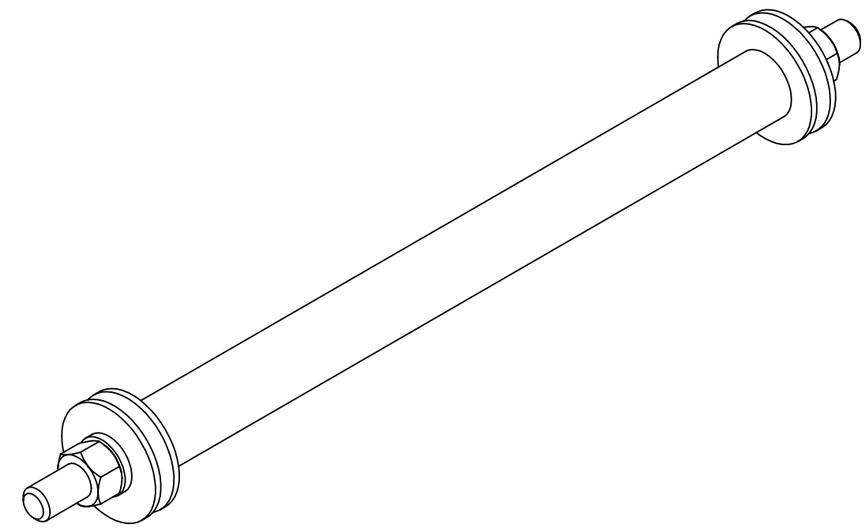

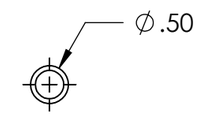

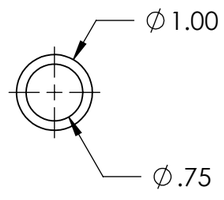

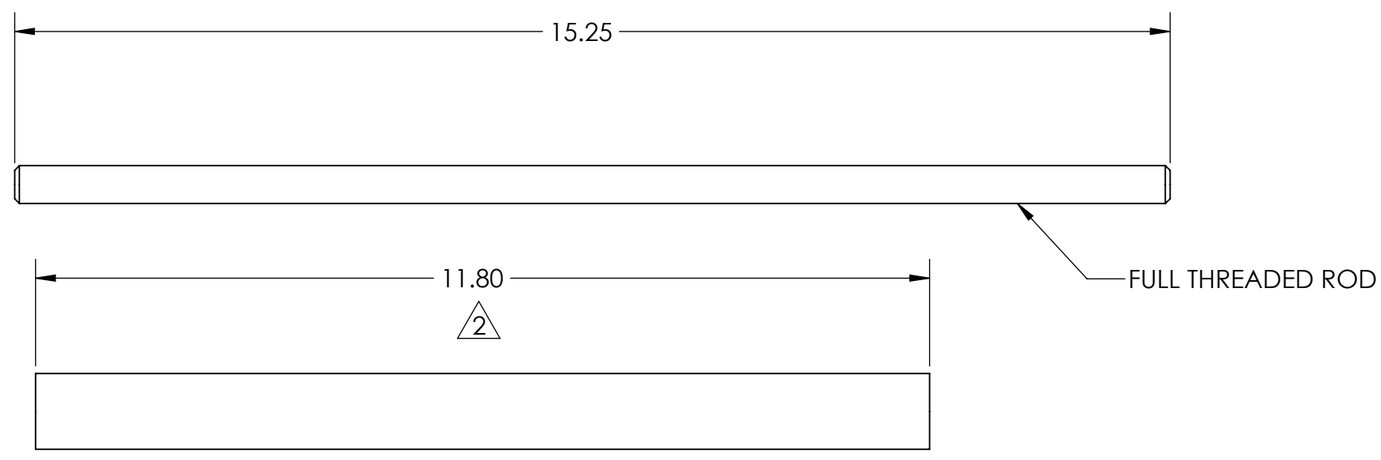

ZONE	REV.	DESCRIPTION	DATE	APPROVED
A2	2	REMOVED FRP WASHER, INSTALL SEPERATED WITH WEIR	8/28/2023	Y.L.
	0	INITIAL DRAWINGS	7/28/2023	Y.L.

REVISIONS

PROPRIETARY AND CONFIDENTIAL

THE INFORMATION CONTAINED IN THIS DRAWING IS THE SOLE PROPERTY OF PROTECTOLITE COMPOSITES INC. ANY REPRODUCTION IN PART OR AS A WHOLE WITHOUT THE WRITTEN PERMISSION OF PROTECTOLITE COMPOSITES INC IS PROHIBITED.

UNLESS OTHERWISE SPECIFIED:

DIMENSIONS ARE IN INCHES
TOLERANCES:
ANGULAR: ±1°
TWO PLACE DECIMAL ± 1/16"
THREE PLACE DECIMAL ± 1/32"

INTERPRET GEOMETRIC TOLERANCING PER:

MATERIAL

FINISH

DO NOT SCALE DRAWING

	NAME	DATE
DRAWN	S.H.	7/28/23
CHECKED	C.X.	7/28/23
ENG APPR.		
MFG APPR.		
Q.A.		

COMMENTS:
PROJECT: WOONSOCKET, RI
60' DIAMETER THICKENER TANK
WO#: 1230343
REF#: 23-117

PROTECTOLITE COMPOSITES INC.

TITLE:
ROUND TUBE ASSEMBLY

SIZE B | DWG. NO. P1230343 TR | REV 2

SCALE: 1:2 | WEIGHT: | SHEET 9 OF 23

BILL OF MATERIAL			
ITEM NUMBER	**PART NAME/DESCRIPTION**	**MATERIAL**	**QTY(1 TANK)**
1	FRP LAUNDER SUPPORT ASSEMBLY	ASSEMBLY FROM 4.5X4.5X1/4" ANGLE	48
	FRP ANGLE 4.5"X4.5"X1/4", 18" LG	ISOPHTHALIC POLYESTER UV STABILIZED	96
	FRP GUSSET 17.75"X17.75"X1/4"	ISOPHTHALIC POLYESTER UV STABILIZED	96
2	1/2"X5-1/2" LG EXPANSION ANCHOR	STAINLESS STEEL 316	96
3	1/2"-13X2-1/4" LG HEX HEAD BOLT FOR JOINT TROUGH	STAINLESS STEEL 316	96
4	1/2" FENDER WASHER	STAINLESS STEEL 316	192
5	1/2" LOCK WASHER	STAINLESS STEEL 316	96
6	1/2"-13 HEX NUT	STAINLESS STEEL 316	96
7	3/8"-16X1.5" LG HEX HEAD BOLT	STAINLESS STEEL 316	192
8	3/8" FLAT WASHER	STAINLESS STEEL 316	384
9	3/8" LOCK WASHER	STAINLESS STEEL 316	192
10	3/8"-16 HEX NUT	STAINLESS STEEL 316	192
11	SEALER	ONE GAL	1

ZONE	REV.	DESCRIPTION	DATE	APPROVED
	2	UPDATED BOM	8/25/2023	Y.L.
	0	INITIAL DRAWINGS	7/28/2023	Y.L.

REVISIONS

PROPRIETARY AND CONFIDENTIAL

THE INFORMATION CONTAINED IN THIS DRAWING IS THE SOLE PROPERTY OF PROTECTOLITE COMPOSITES INC. ANY REPRODUCTION IN PART OR AS A WHOLE WITHOUT THE WRITTEN PERMISSION OF PROTECTOLITE COMPOSITES INC IS PROHIBITED.

UNLESS OTHERWISE SPECIFIED:

DIMENSIONS ARE IN INCHES
TOLERANCES:
ANGULAR: ±1°
TWO PLACE DECIMAL ± 1/16"
THREE PLACE DECIMAL ± 1/32"

INTERPRET GEOMETRIC TOLERANCING PER:

MATERIAL

FINISH

DO NOT SCALE DRAWING

	NAME	DATE
DRAWN	S.H.	7/28/23
CHECKED	C.X.	7/28/23
ENG APPR.		
MFG APPR.		
Q.A.		

COMMENTS:
PROJECT: WOONSOCKET, RI
60' DIAMETER THICKENER TANK
WO#: 1230343
REF#: 23-117

PROTECTOLITE™ COMPOSITES INC.

TITLE:
BILL OF MATERIAL - TROUGH SUPPORT

SIZE B | DWG. NO. P1230343 TR | REV 2

SCALE: 1:1 | WEIGHT: | SHEET 10 OF 23

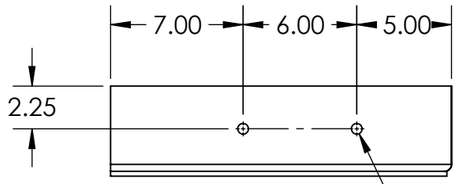

2x ∅ .56 THRU PLANT DRILL
USE AS A DRILLING TEMPLATE FOR BOTTOM OF TROUGHS
USE A MARKER AND TRACE USING TROUGH
TO MARK THE POSITION OF HOLES FOR FIELD DRILLING
(SEE DETAIL E, PAGE 4 OF 23)

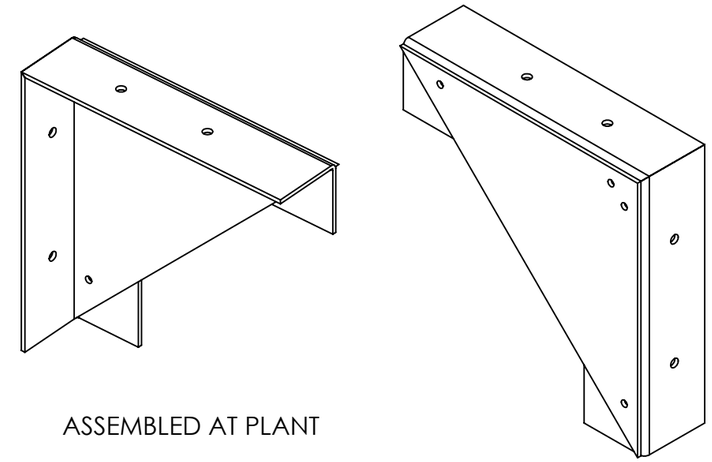

ASSEMBLED AT PLANT

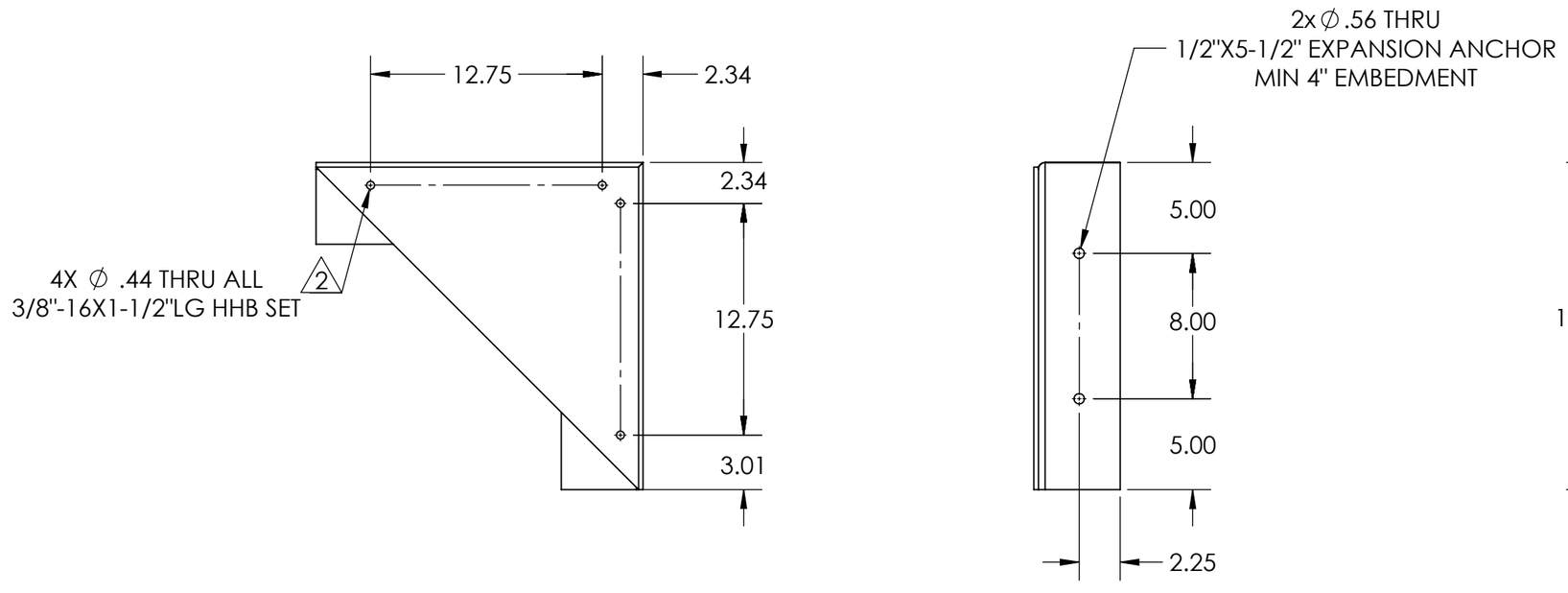

ZONE	REV.	DESCRIPTION	DATE	APPROVED
A4, B3	2	UPDATED NOTES, BOLT SIZE FOR SUPPORT ASSEMBLY	8/28/2023	Y.L.
	0	INITIAL DRAWINGS	7/28/2023	Y.L.

REVISIONS

PROPRIETARY AND CONFIDENTIAL

THE INFORMATION CONTAINED IN THIS DRAWING IS THE SOLE PROPERTY OF PROTECTOLITE COMPOSITES INC. ANY REPRODUCTION IN PART OR AS A WHOLE WITHOUT THE WRITTEN PERMISSION OF PROTECTOLITE COMPOSITES INC IS PROHIBITED.

UNLESS OTHERWISE SPECIFIED:

DIMENSIONS ARE IN INCHES
TOLERANCES:
ANGULAR: ±1°
TWO PLACE DECIMAL ± 1/16"
THREE PLACE DECIMAL ± 1/32"

INTERPRET GEOMETRIC TOLERANCING PER:

MATERIAL

FINISH

DO NOT SCALE DRAWING

	NAME	DATE
DRAWN	S.H.	7/28/23
CHECKED	C.X.	7/28/23
ENG APPR.		
MFG APPR.		
Q.A.		

COMMENTS:
PROJECT: WOONSOCKET, RI
60' DIAMETER THICKENER TANK
WO#: 1230343
REF#: 23-117

PROTECTOLITE COMPOSITES INC.

TITLE:

TROUGH SUPPORT DETAIL

SIZE	DWG. NO.	REV
B	P1230343 TR	2

SCALE: 1:8 | WEIGHT: | SHEET 11 OF 23

BILL OF MATERIAL			
ITEM NUMBER	PART NAME/DESCRIPTION	MATERIAL	QTY(1 TANK)
1	FRP BAFFLE PANEL 12"X88.19"X1/4"	ISOPHTHALIC POLYESTER UV STABILIZED	22
2	FRP BAFFLE SPLICE PLATE 12"X6"X1/4"	ISOPHTHALIC POLYESTER UV STABILIZED	23
3	FRP MAKEUP BAFFLE PANEL 24"X88.19"X1/4"	ISOPHTHALIC POLYESTER UV STABILIZED	2
4	FRP MAKEUP BAFFLE SPLICE PLATE 24"X6"X1/4"	ISOPHTHALIC POLYESTER UV STABILIZED	1
5	FRP UPPER SUPPORT BRACKER (BAFFLE), MOLDED 6"X10"X1/4"	ISOPHTHALIC POLYESTER UV STABILIZED	48
6	FRP LOWER SUPPORT BRACKER (WALL), MOLDED 7"X10"X1/4"	ISOPHTHALIC POLYESTER UV STABILIZED	48
7	1/2"-13x1-3/4" LG HEX HEAD BOLT	STAINLESS STEEL 316	96
8	1/2" FLAT WASHER	STAINLESS STEEL 316	192
9	1/2" LOCK WASHER	STAINLESS STEEL 316	96
10	1/2"-13 HEX NUT	STAINLESS STEEL 316	96
11	3/8"-16x1-1/2" LG FLAT HEAD SOCKET CAP SCREW, 82° CSK	STAINLESS STEEL 316	200
12	0.4" ID X 1-1/4" OVER SIZE FLAT WASHER	STAINLESS STEEL 316	400
13	3/8" LOCK WASHER	STAINLESS STEEL 316	200
14	3/8"-16 HEX NUT	STAINLESS STEEL 316	200
15	Sealer	Pro'lack ONE GALLON	1

ZONE	REV.	DESCRIPTION	DATE	APPROVED
	2	UPDATED BOM AND HARDWARE, FIXED BAFFLE INSIDE DIAMETER, UPDATED NOTES	8/28/2023	Y.L.
	1	CHANGED TROUGH OUTER HEIGHT	8/11/2023	Y.L.
	0	INITIAL DRAWINGS	7/28/2023	Y.L.

REVISIONS

PROPRIETARY AND CONFIDENTIAL

THE INFORMATION CONTAINED IN THIS DRAWING IS THE SOLE PROPERTY OF PROTECTOLITE COMPOSITES INC. ANY REPRODUCTION IN PART OR AS A WHOLE WITHOUT THE WRITTEN PERMISSION OF PROTECTOLITE COMPOSITES INC IS PROHIBITED.

UNLESS OTHERWISE SPECIFIED:

DIMENSIONS ARE IN INCHES
TOLERANCES:
ANGULAR: ±1°
TWO PLACE DECIMAL ± 1/16"
THREE PLACE DECIMAL ± 1/32"

INTERPRET GEOMETRIC TOLERANCING PER:

MATERIAL

FINISH

DO NOT SCALE DRAWING

	NAME	DATE
DRAWN	S.H.	7/28/23
CHECKED	C.X.	7/28/23
ENG APPR.		
MFG APPR.		
Q.A.		

COMMENTS:
PROJECT: WOONSOCKET, RI
60' DIAMETER THICKENER TANK
WO#: 1230343
REF#: 23-117

PROTECTOLITE™ COMPOSITES INC.

TITLE:
BILL OF MATERIAL - BAFFLES

SIZE	DWG. NO.	REV
B	P1230343 WB	2

SCALE: 1:1 | WEIGHT: | SHEET 12 OF 23

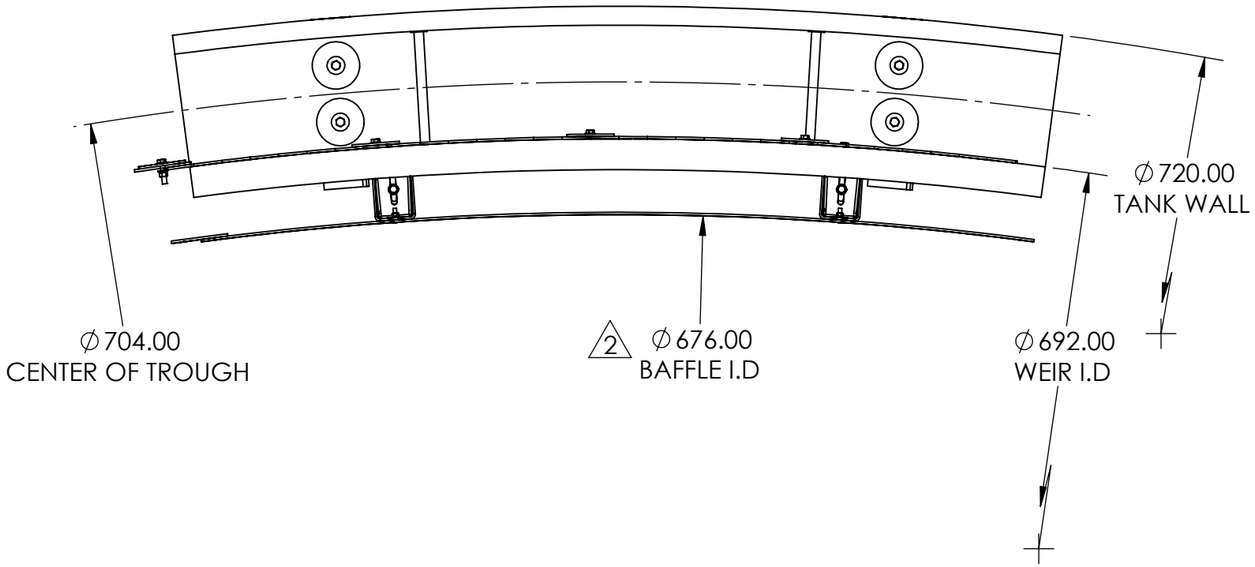

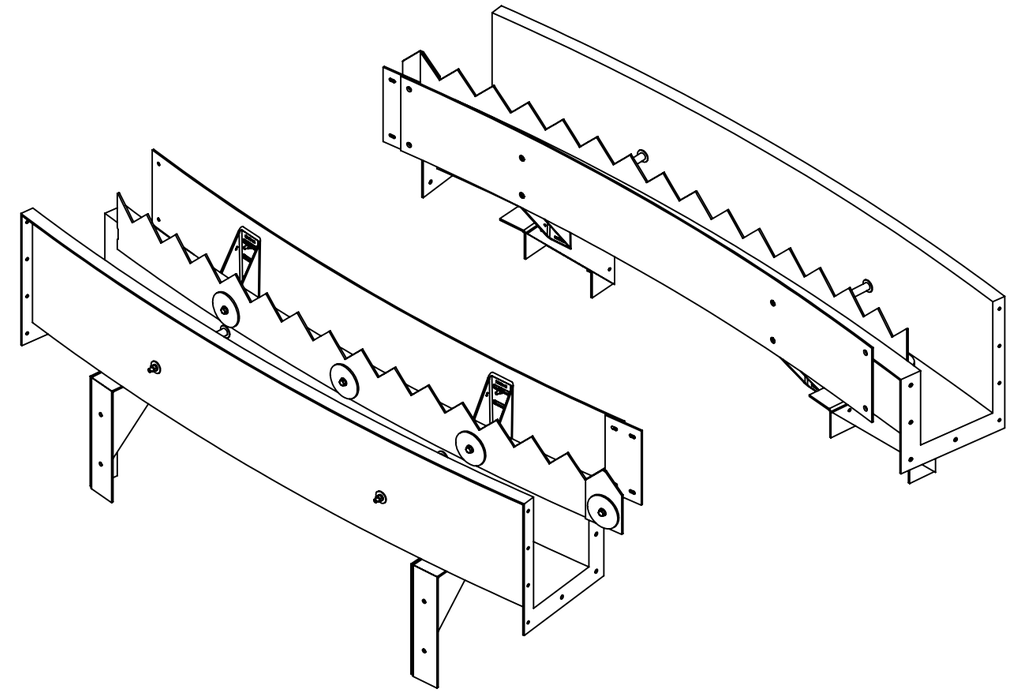

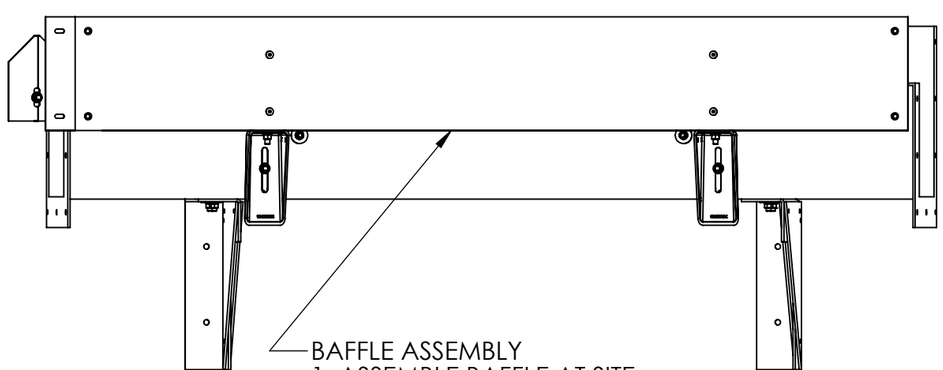

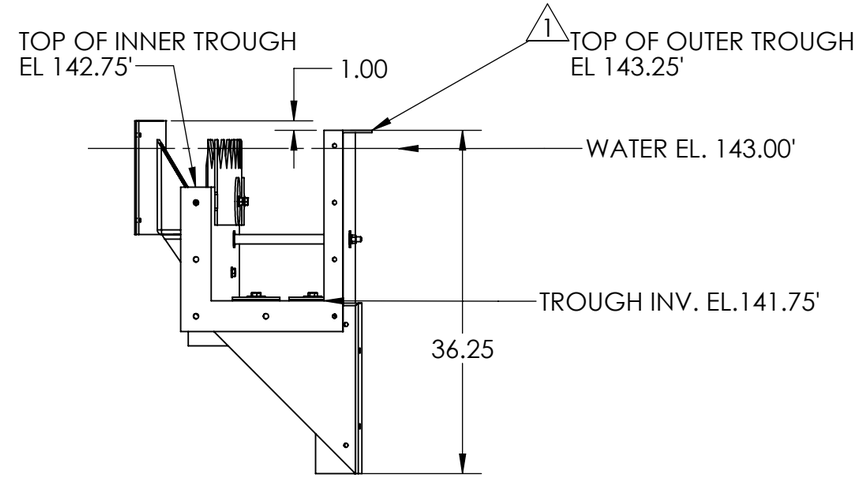

BAFFLE ASSEMBLY
1. ASSEMBLE BAFFLE AT SITE
2. USE TWO 9/16" PRE-DRILLED HOLES AT TROUGH FOR LOWER BAFFLE SUPPORT
3. SEE INSTALLATION DETAIL PAGE 14 OF 23

ZONE	REV.	DESCRIPTION	DATE	APPROVED
B3	2	FIXED BAFFLE INSIDE DIAMETER	8/28/2023	Y.L.
B2	1	MODIFIED TROUGH OUTER HEIGHT	8/11/2023	Y.L.
	0	INITIAL DRAWINGS	7/28/2023	Y.L.

REVISIONS

PROPRIETARY AND CONFIDENTIAL

THE INFORMATION CONTAINED IN THIS DRAWING IS THE SOLE PROPERTY OF PROTECTOLITE COMPOSITES INC. ANY REPRODUCTION IN PART OR AS A WHOLE WITHOUT THE WRITTEN PERMISSION OF PROTECTOLITE COMPOSITES INC IS PROHIBITED.

UNLESS OTHERWISE SPECIFIED:

DIMENSIONS ARE IN INCHES
TOLERANCES:
ANGULAR: ±1°
TWO PLACE DECIMAL ± 1/16"
THREE PLACE DECIMAL ± 1/32"

INTERPRET GEOMETRIC TOLERANCING PER:

MATERIAL

FINISH

DO NOT SCALE DRAWING

	NAME	DATE
DRAWN	S.H.	7/28/23
CHECKED	C.X.	7/28/23
ENG APPR.		
MFG APPR.		
Q.A.		

COMMENTS:
PROJECT: WOONSOCKET, RI
60' DIAMETER THICKENER TANK
WO#: 1230343
REF#: 23-117

PROTECTOLITE COMPOSITES INC.

TITLE:
WEIRS AND BAFFLES ASSEMBLY LAYOUT

SIZE B | DWG. NO. P1230343 WB | REV 2

SCALE: 1:16 | WEIGHT: | SHEET 13 OF 23

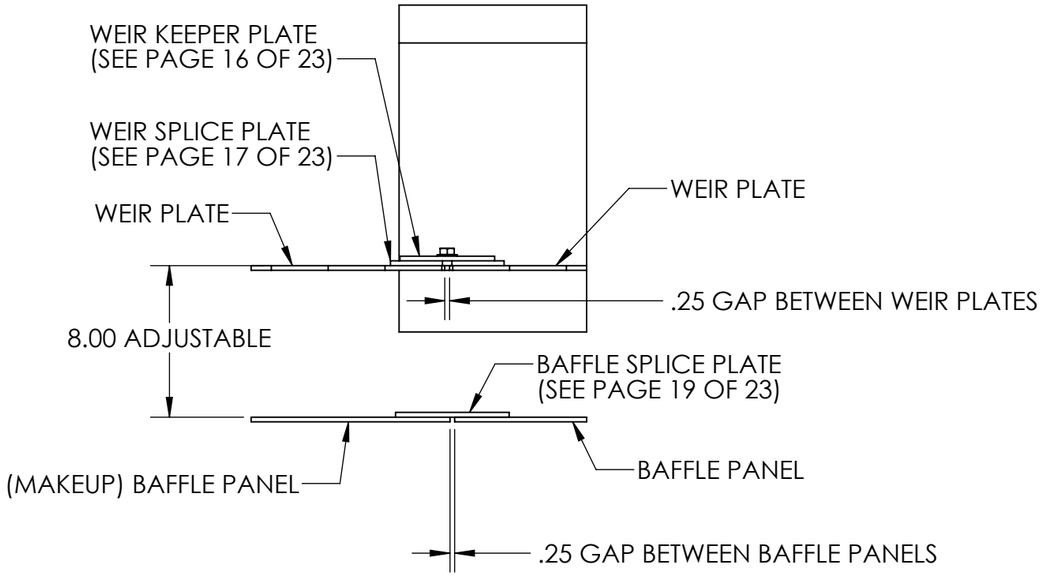

SECTION K-K
SCALE 1 : 8

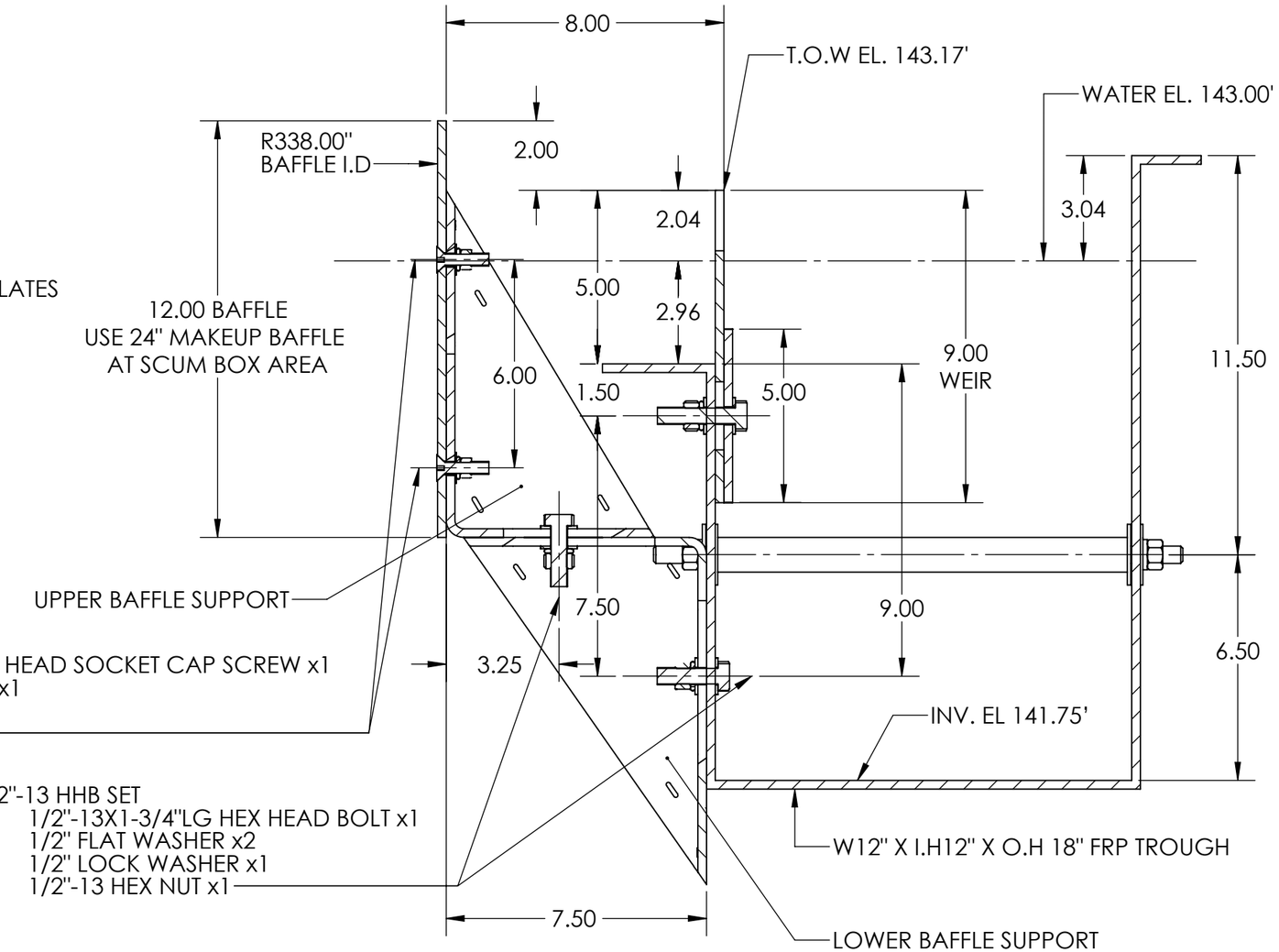

3/8"-16 HHB SET
- 3/8"-16X1-1/2"LG FLAT HEAD SOCKET CAP SCREW x1
- 3/8" FENDER WASHER x1
- 3/8" LOCK WASHER x1
- 3/8"-16 HEX NUT x1

1/2"-13 HHB SET
- 1/2"-13X1-3/4"LG HEX HEAD BOLT x1
- 1/2" FLAT WASHER x2
- 1/2" LOCK WASHER x1
- 1/2"-13 HEX NUT x1

SECTION J-J
SCALE 1 : 4

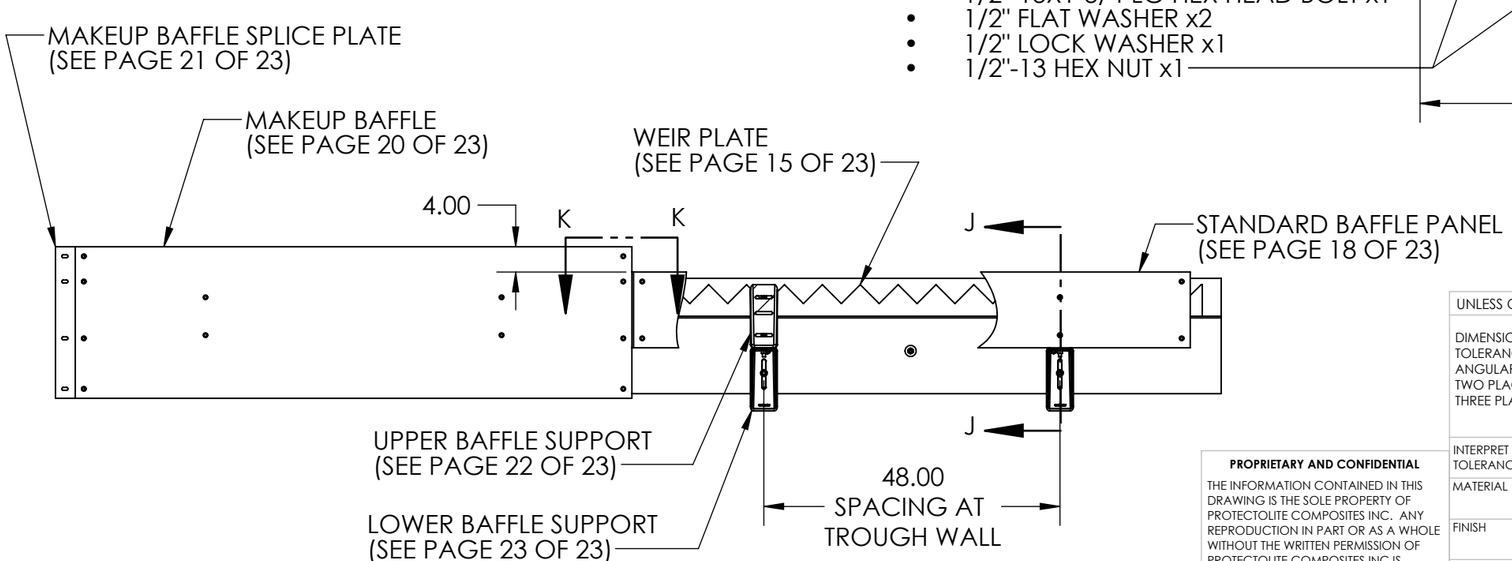

PROPRIETARY AND CONFIDENTIAL

THE INFORMATION CONTAINED IN THIS DRAWING IS THE SOLE PROPERTY OF PROTECTOLITE COMPOSITES INC. ANY REPRODUCTION IN PART OR AS A WHOLE WITHOUT THE WRITTEN PERMISSION OF PROTECTOLITE COMPOSITES INC IS PROHIBITED.

UNLESS OTHERWISE SPECIFIED:

DIMENSIONS ARE IN INCHES
TOLERANCES:
ANGULAR: ±1°
TWO PLACE DECIMAL ± 1/16"
THREE PLACE DECIMAL ± 1/32"

INTERPRET GEOMETRIC TOLERANCING PER:

MATERIAL

FINISH

DO NOT SCALE DRAWING

	NAME	DATE
DRAWN	S.H.	7/28/23
CHECKED	C.X.	7/28/23
ENG APPR.		
MFG APPR.		
Q.A.		

COMMENTS:
PROJECT: WOONSOCKET, RI
60' DIAMETER THICKENER TANK
WO#: 1230343
REF#: 23-117

PROTECTOLITE COMPOSITES INC.

TITLE:
WEIRS AND BAFFLES INSTALLATION LAYOUT

SIZE	DWG. NO.	REV
B	P1230343 WB	2

SCALE: 1:24 | WEIGHT: | SHEET 14 OF 23

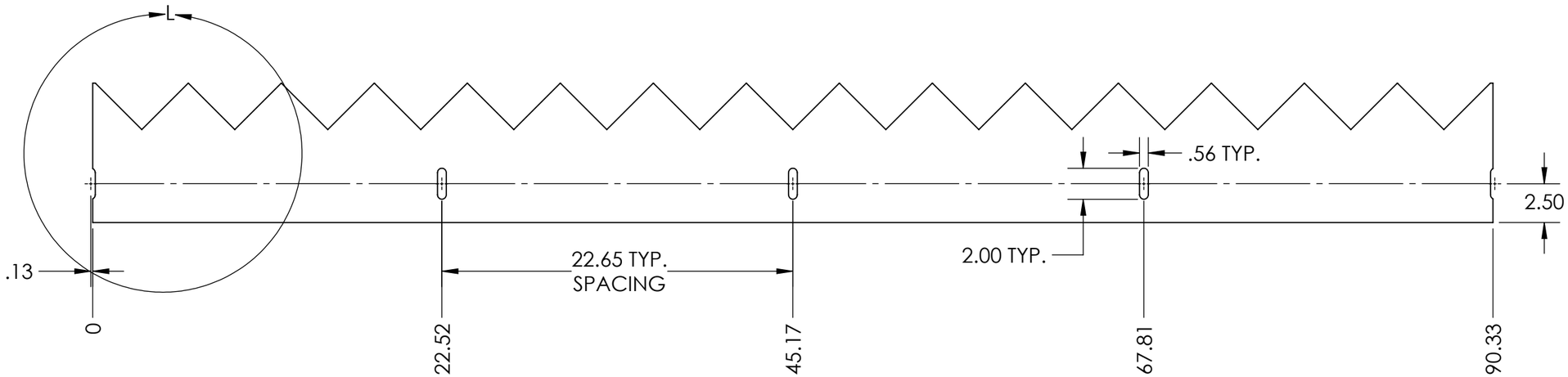

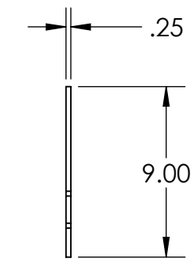

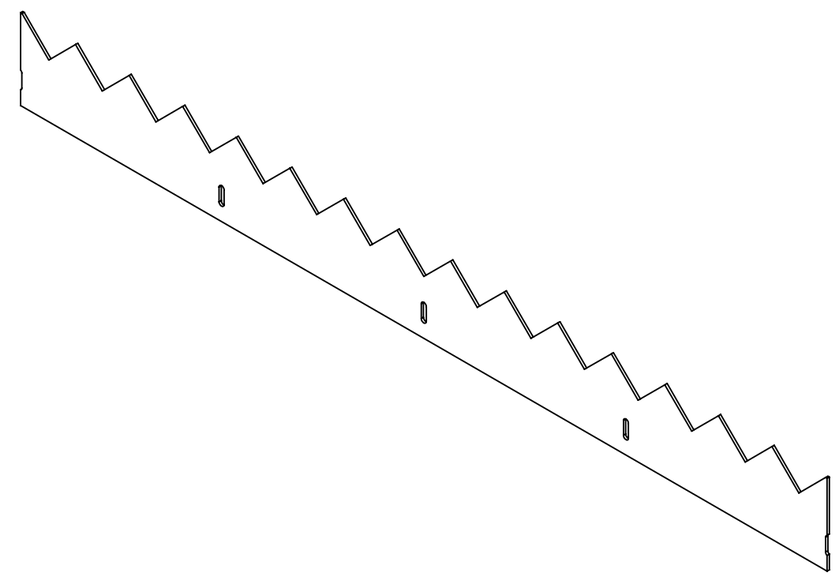

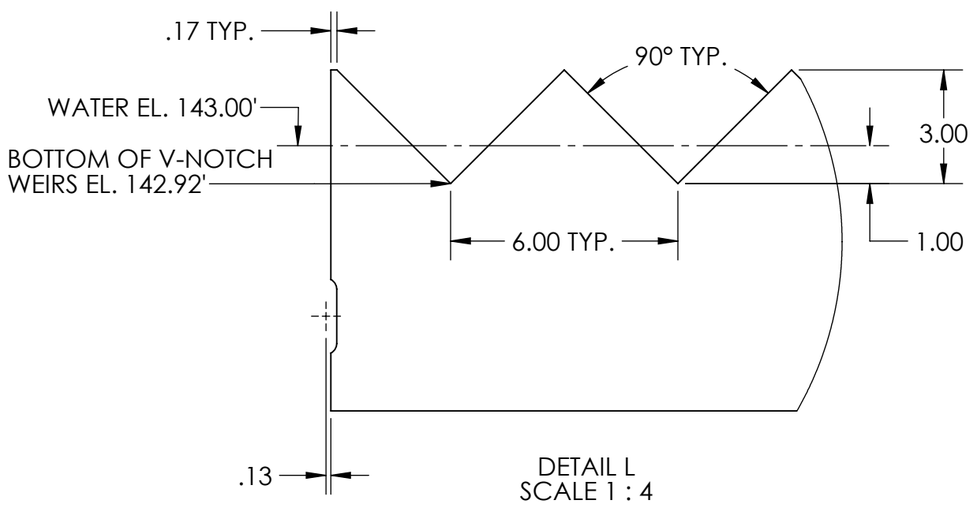

DETAIL L
SCALE 1 : 4

UNLESS OTHERWISE SPECIFIED:		NAME	DATE
DIMENSIONS ARE IN INCHES TOLERANCES: ANGULAR: ±1° TWO PLACE DECIMAL ± 1/16" THREE PLACE DECIMAL ± 1/32"	DRAWN	S.H.	7/28/23
	CHECKED	C.X.	7/28/23
	ENG APPR.		
	MFG APPR.		
INTERPRET GEOMETRIC TOLERANCING PER:	Q.A.		
MATERIAL	COMMENTS: PROJECT: WOONSOCKET, RI 60' DIAMETER THICKENER TANK WO#: 1230343 REF#: 23-117		
FINISH			
DO NOT SCALE DRAWING			

PROPRIETARY AND CONFIDENTIAL

THE INFORMATION CONTAINED IN THIS DRAWING IS THE SOLE PROPERTY OF PROTECTOLITE COMPOSITES INC. ANY REPRODUCTION IN PART OR AS A WHOLE WITHOUT THE WRITTEN PERMISSION OF PROTECTOLITE COMPOSITES INC IS PROHIBITED.

PROTECTOLITE™ COMPOSITES INC.

TITLE:

WEIR PLATE

SIZE	DWG. NO.	REV
B	P1230343 WB	2
SCALE: 1:8	WEIGHT:	SHEET 15 OF 23

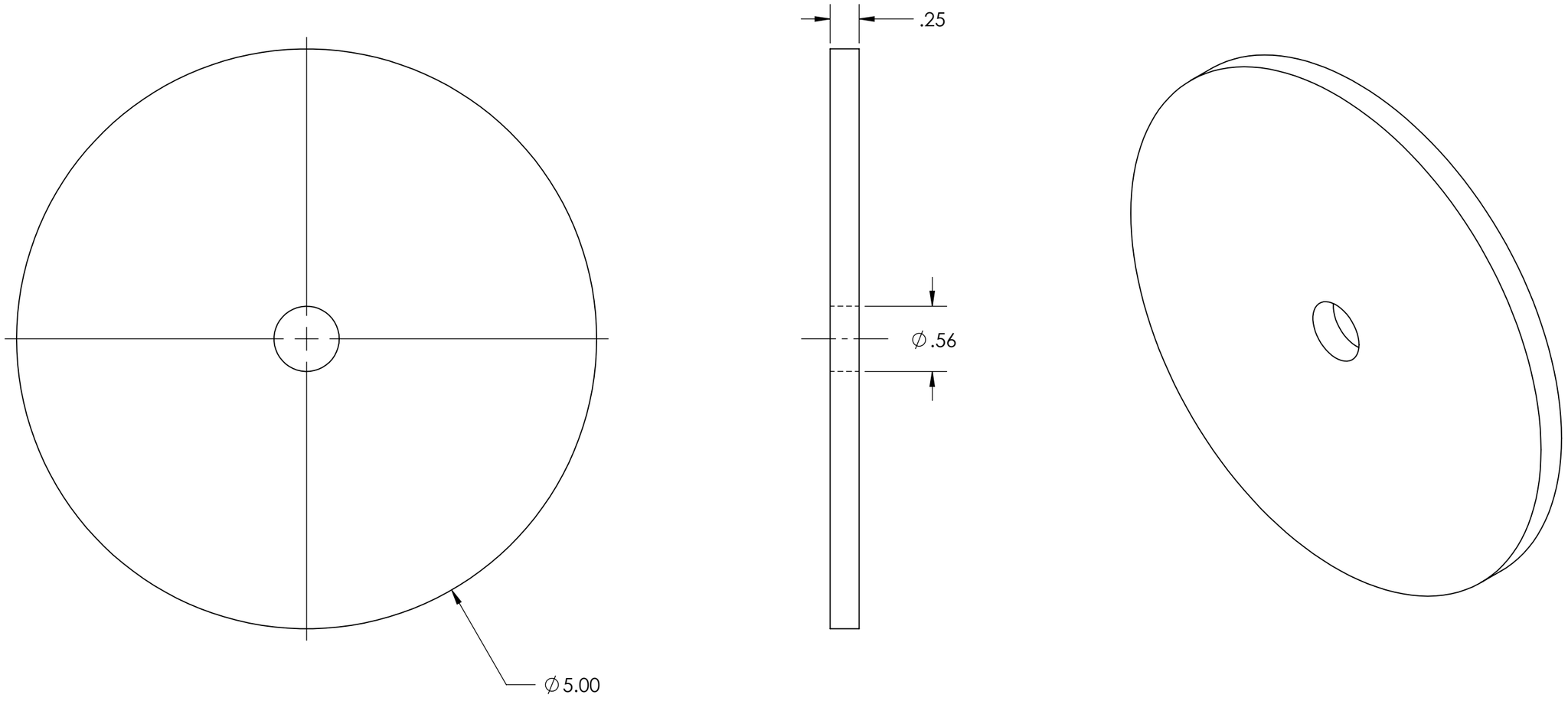

UNLESS OTHERWISE SPECIFIED:		NAME	DATE
DIMENSIONS ARE IN INCHES TOLERANCES: ANGULAR: ±1° TWO PLACE DECIMAL ± 1/16" THREE PLACE DECIMAL ± 1/32"	DRAWN	S.H.	7/28/23
	CHECKED	C.X.	7/28/23
	ENG APPR.		
	MFG APPR.		
INTERPRET GEOMETRIC TOLERANCING PER:	Q.A.		
MATERIAL	COMMENTS: PROJECT: WOONSOCKET, RI 60' DIAMETER THICKENER TANK WO#: 1230343 REF#: 23-117		
FINISH			
DO NOT SCALE DRAWING			

PROPRIETARY AND CONFIDENTIAL

THE INFORMATION CONTAINED IN THIS DRAWING IS THE SOLE PROPERTY OF PROTECTOLITE COMPOSITES INC. ANY REPRODUCTION IN PART OR AS A WHOLE WITHOUT THE WRITTEN PERMISSION OF PROTECTOLITE COMPOSITES INC IS PROHIBITED.

PROTECTOLITE™ COMPOSITES INC.

TITLE:

WEIR KEEPER PLATE

SIZE	DWG. NO.	REV
B	P1230343 WB	2

SCALE: 1:1 | WEIGHT: | SHEET 16 OF 23

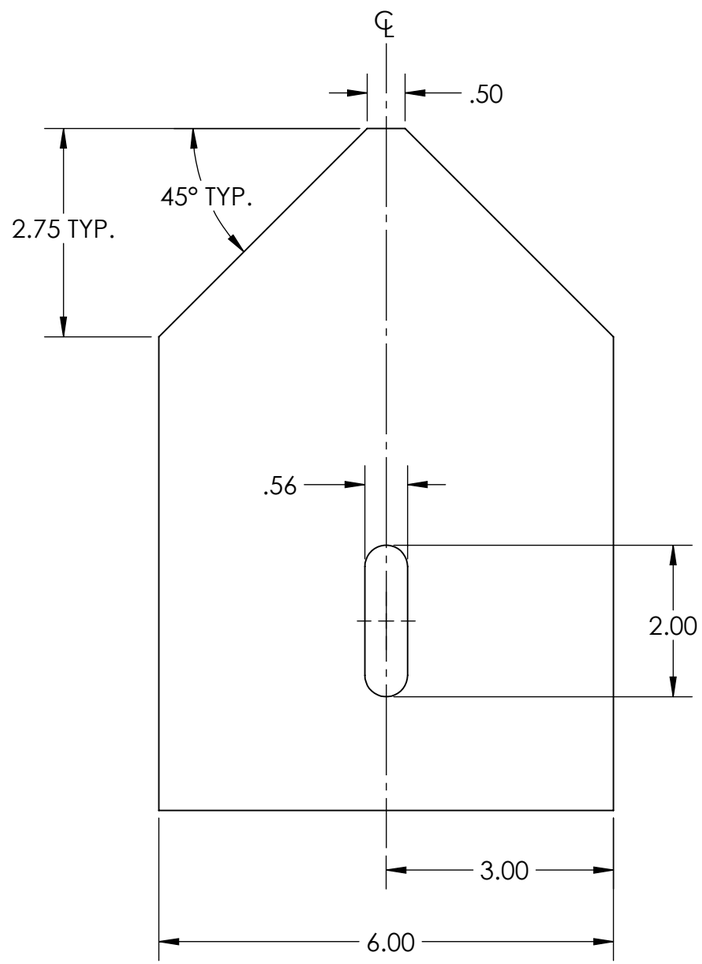

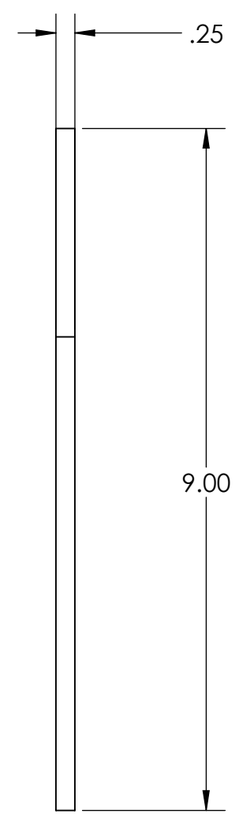

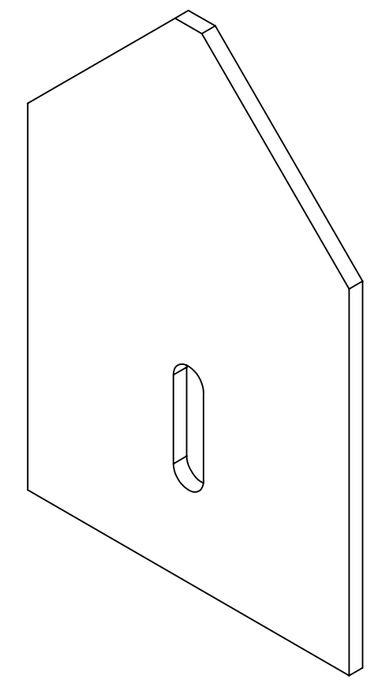

PROPRIETARY AND CONFIDENTIAL

THE INFORMATION CONTAINED IN THIS DRAWING IS THE SOLE PROPERTY OF PROTECTOLITE COMPOSITES INC. ANY REPRODUCTION IN PART OR AS A WHOLE WITHOUT THE WRITTEN PERMISSION OF PROTECTOLITE COMPOSITES INC IS PROHIBITED.

UNLESS OTHERWISE SPECIFIED:

DIMENSIONS ARE IN INCHES
TOLERANCES:
ANGULAR: ±1°
TWO PLACE DECIMAL ± 1/16"
THREE PLACE DECIMAL ± 1/32"

INTERPRET GEOMETRIC TOLERANCING PER:

MATERIAL

FINISH

DO NOT SCALE DRAWING

	NAME	DATE
DRAWN	S.H.	7/28/23
CHECKED	C.X.	7/28/23
ENG APPR.		
MFG APPR.		
Q.A.		

COMMENTS:
PROJECT: WOONSOCKET, RI
60' DIAMETER THICKENER TANK
WO#: 1230343
REF#: 23-117

PROTECTOLITE™ COMPOSITES INC.

TITLE:
WEIR SPLICE PLATE

SIZE	DWG. NO.	REV
B	P1230343 WB	2

SCALE: 1:2 | WEIGHT: | SHEET 17 OF 23

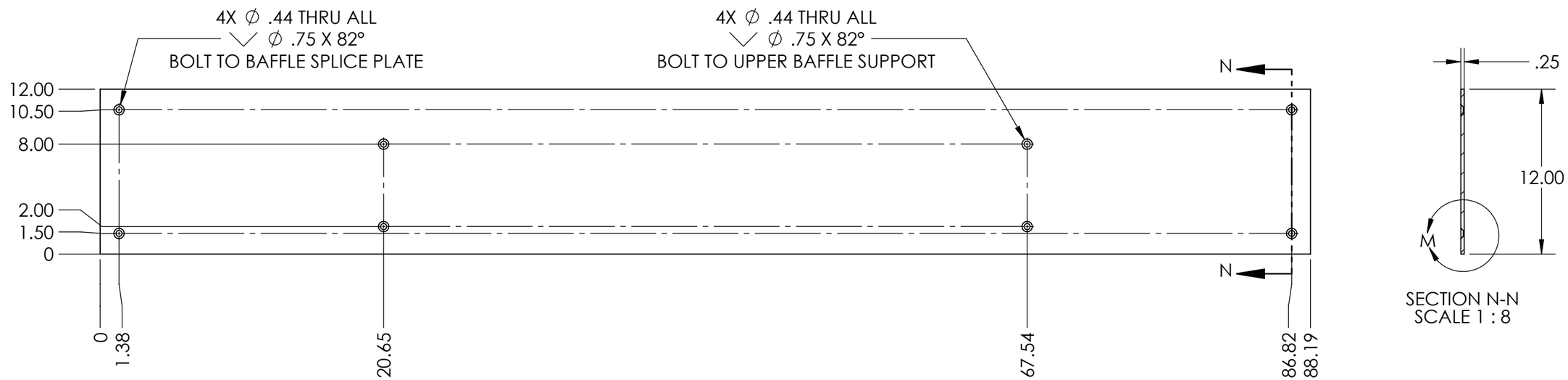

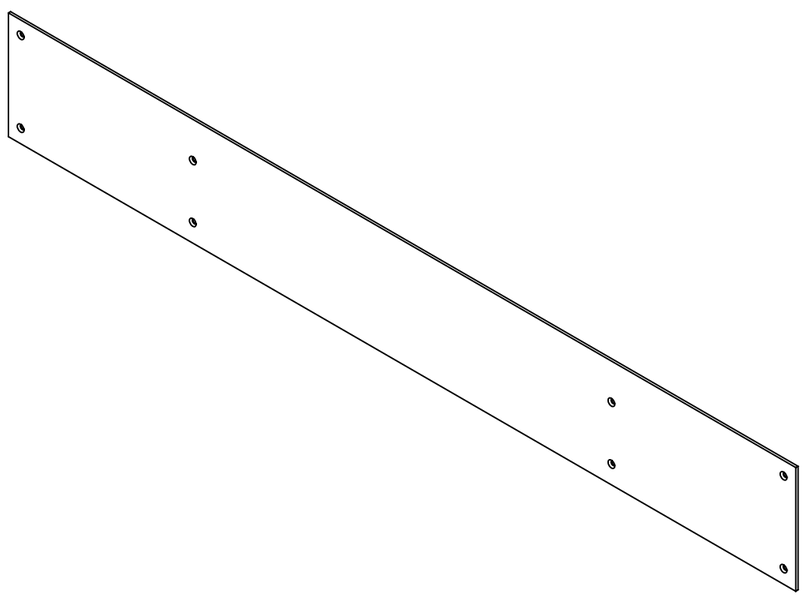

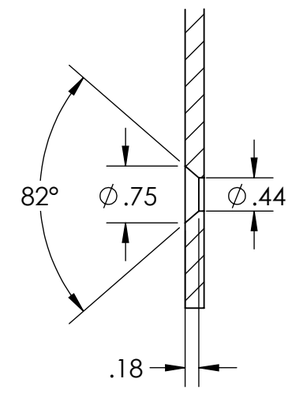

DETAIL M
SCALE 1 : 2

UNLESS OTHERWISE SPECIFIED:		NAME	DATE
DIMENSIONS ARE IN INCHES TOLERANCES: ANGULAR: ±1° TWO PLACE DECIMAL ± 1/16" THREE PLACE DECIMAL ± 1/32"	DRAWN	S.H.	7/28/23
	CHECKED	C.X.	7/28/23
	ENG APPR.		
	MFG APPR.		
INTERPRET GEOMETRIC TOLERANCING PER:	Q.A.		
MATERIAL	COMMENTS: PROJECT: WOONSOCKET, RI 60' DIAMETER THICKENER TANK WO#: 1230343 REF#: 23-117		
FINISH			
DO NOT SCALE DRAWING			

PROPRIETARY AND CONFIDENTIAL

THE INFORMATION CONTAINED IN THIS DRAWING IS THE SOLE PROPERTY OF PROTECTOLITE COMPOSITES INC. ANY REPRODUCTION IN PART OR AS A WHOLE WITHOUT THE WRITTEN PERMISSION OF PROTECTOLITE COMPOSITES INC IS PROHIBITED.

PROTECTOLITE™ COMPOSITES INC.

TITLE:

BAFFLE PANEL

SIZE	DWG. NO.	REV
B	P1230343 WB	2
SCALE: 1:8	WEIGHT:	SHEET 18 OF 23

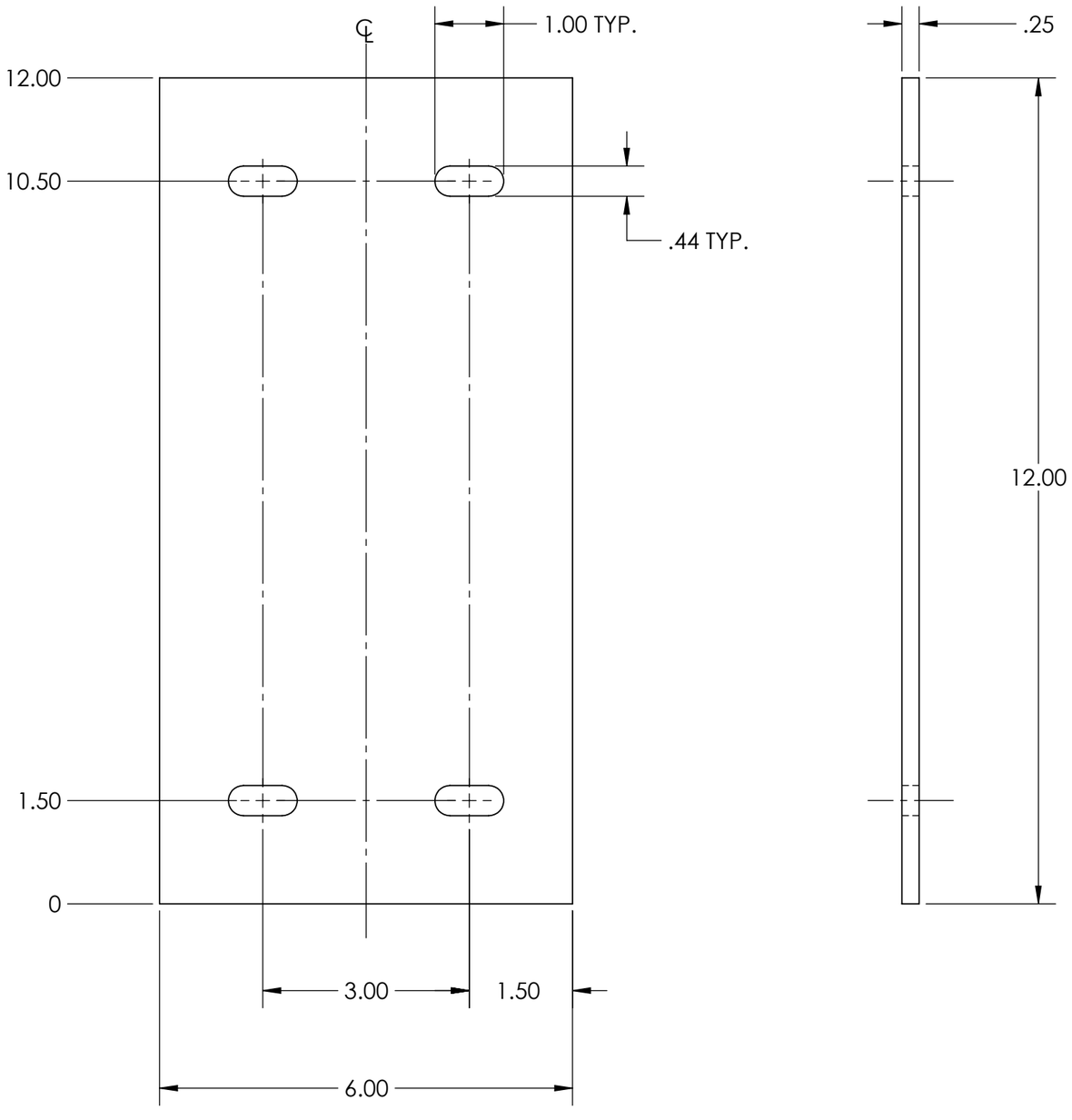

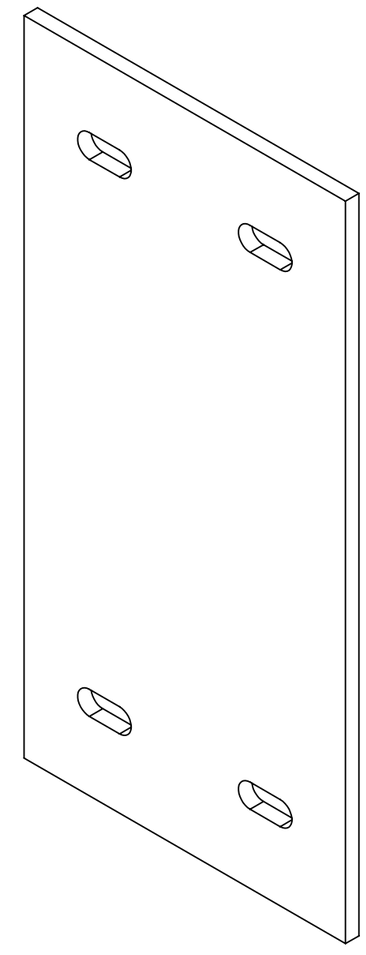

UNLESS OTHERWISE SPECIFIED:		NAME	DATE
DIMENSIONS ARE IN INCHES TOLERANCES: ANGULAR: ±1° TWO PLACE DECIMAL ± 1/16" THREE PLACE DECIMAL ± 1/32"	DRAWN	S.H.	7/28/23
	CHECKED	C.X.	7/28/23
	ENG APPR.		
	MFG APPR.		
INTERPRET GEOMETRIC TOLERANCING PER:	Q.A.		
MATERIAL	COMMENTS: PROJECT: WOONSOCKET, RI 60' DIAMETER THICKENER TANK WO#: 1230343 REF#: 23-117		
FINISH			
DO NOT SCALE DRAWING			

PROPRIETARY AND CONFIDENTIAL

THE INFORMATION CONTAINED IN THIS DRAWING IS THE SOLE PROPERTY OF PROTECTOLITE COMPOSITES INC. ANY REPRODUCTION IN PART OR AS A WHOLE WITHOUT THE WRITTEN PERMISSION OF PROTECTOLITE COMPOSITES INC IS PROHIBITED.

PROTECTOLITE™ COMPOSITES INC.

TITLE:

BAFFLE SPLICE PLATE

SIZE	DWG. NO.	REV
B	P1230343 WB	2
SCALE: 1:2	WEIGHT:	SHEET 19 OF 23

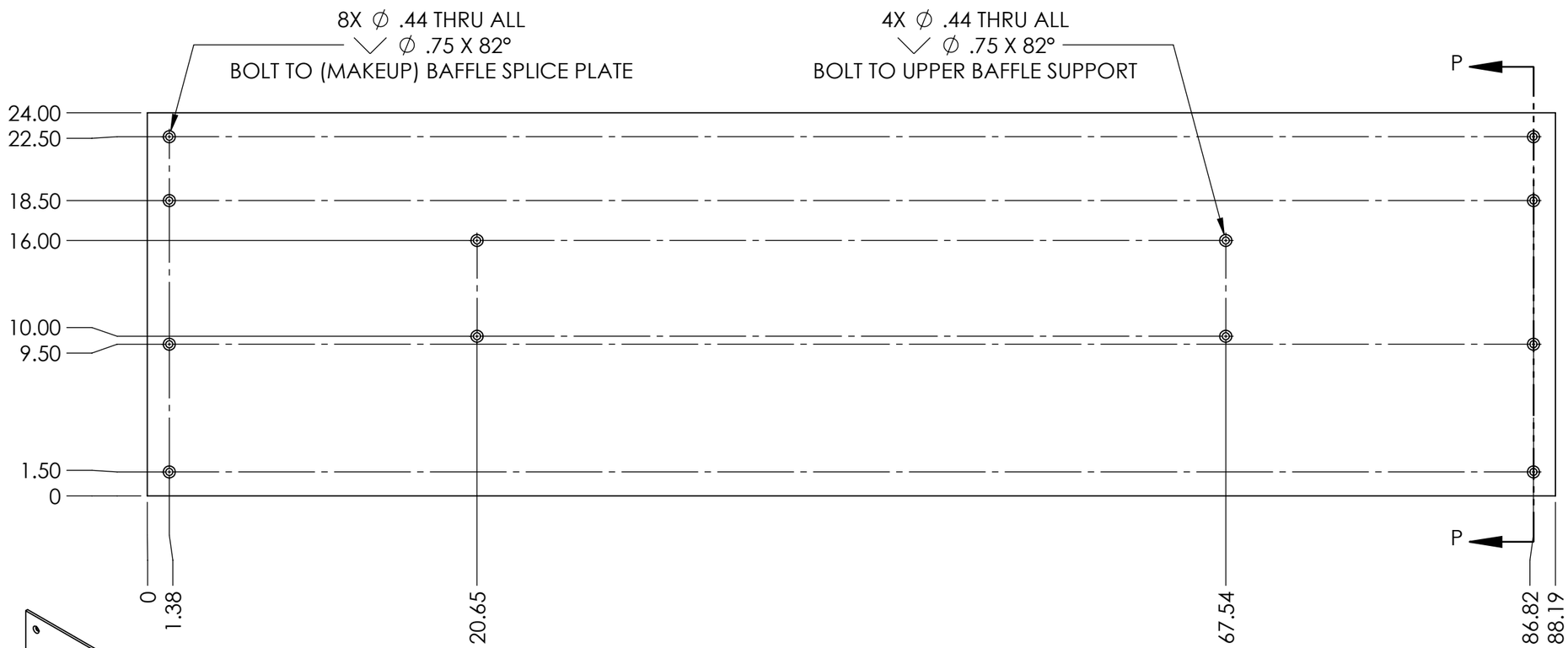

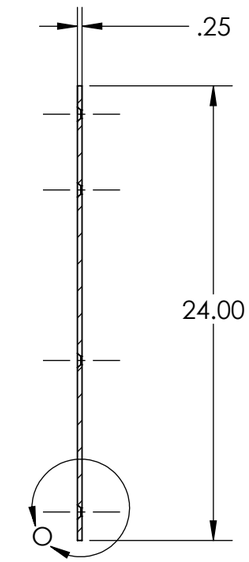

SECTION P-P
SCALE 1 : 8

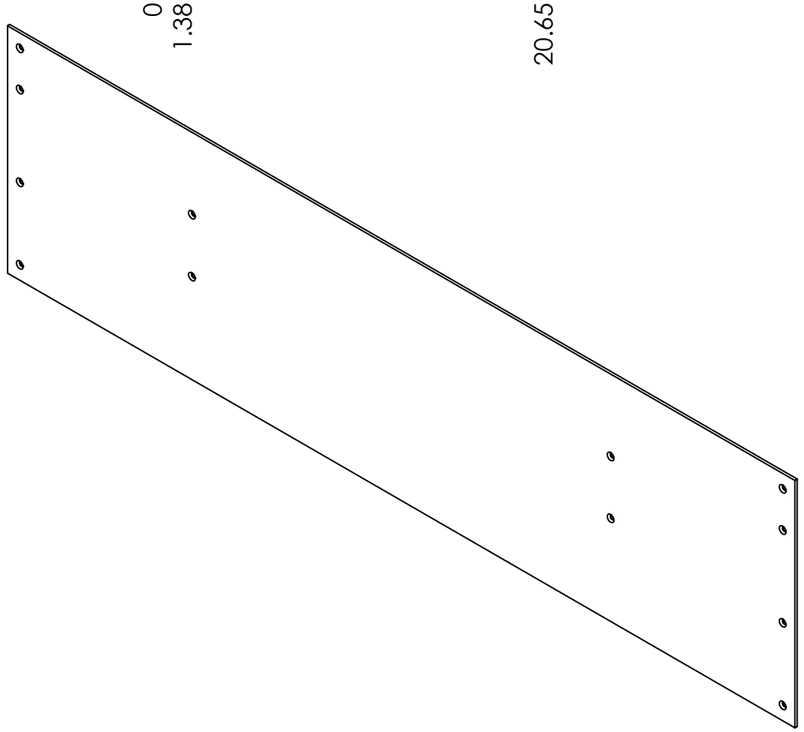

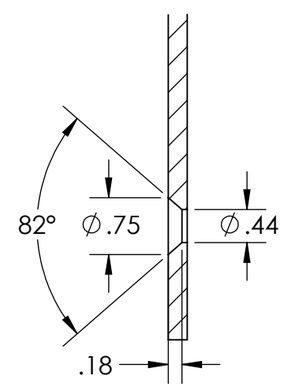

DETAIL O
SCALE 1 : 2

PROPRIETARY AND CONFIDENTIAL

THE INFORMATION CONTAINED IN THIS DRAWING IS THE SOLE PROPERTY OF PROTECTOLITE COMPOSITES INC. ANY REPRODUCTION IN PART OR AS A WHOLE WITHOUT THE WRITTEN PERMISSION OF PROTECTOLITE COMPOSITES INC IS PROHIBITED.

UNLESS OTHERWISE SPECIFIED:

DIMENSIONS ARE IN INCHES
TOLERANCES:
ANGULAR: ± 1°
TWO PLACE DECIMAL ± 1/16"
THREE PLACE DECIMAL ± 1/32"

INTERPRET GEOMETRIC TOLERANCING PER:

MATERIAL

FINISH

DO NOT SCALE DRAWING

	NAME	DATE
DRAWN	S.H.	7/28/23
CHECKED	C.X.	7/28/23
ENG APPR.		
MFG APPR.		
Q.A.		

COMMENTS:
PROJECT: WOONSOCKET, RI
60' DIAMETER THICKENER TANK
WO#: 1230343
REF#: 23-117

PROTECTOLITE™ COMPOSITES INC.

TITLE:
MAKEUP BAFFLE PANEL

SIZE	DWG. NO.	REV
B	P1230343 WB	2

SCALE: 1:8 | WEIGHT: | SHEET 20 OF 23

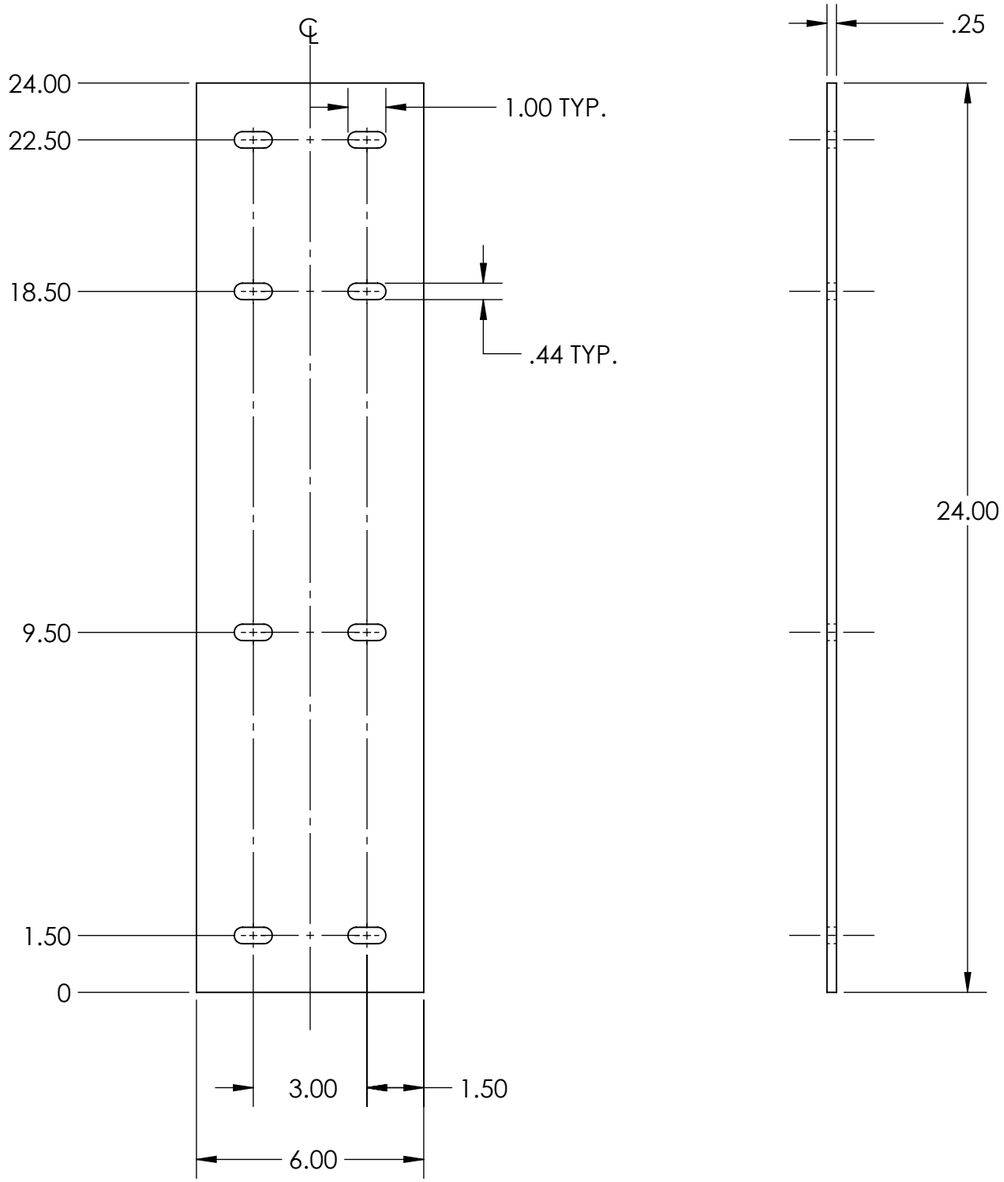

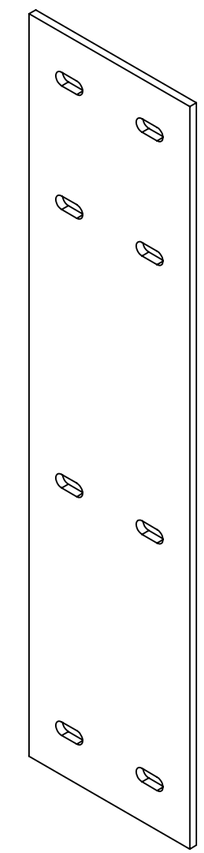

UNLESS OTHERWISE SPECIFIED:		NAME	DATE
DIMENSIONS ARE IN INCHES TOLERANCES: ANGULAR: ±1° TWO PLACE DECIMAL ± 1/16" THREE PLACE DECIMAL ± 1/32"	DRAWN	S.H.	7/28/23
	CHECKED	C.X.	7/28/23
	ENG APPR.		
	MFG APPR.		
INTERPRET GEOMETRIC TOLERANCING PER:	Q.A.		
MATERIAL	COMMENTS:		
FINISH	PROJECT: WOONSOCKET, RI 60' DIAMETER THICKENER TANK WO#: 1230343 REF#: 23-117		
DO NOT SCALE DRAWING			

PROPRIETARY AND CONFIDENTIAL

THE INFORMATION CONTAINED IN THIS DRAWING IS THE SOLE PROPERTY OF PROTECTOLITE COMPOSITES INC. ANY REPRODUCTION IN PART OR AS A WHOLE WITHOUT THE WRITTEN PERMISSION OF PROTECTOLITE COMPOSITES INC IS PROHIBITED.

PROTECTOLITE™ COMPOSITES INC.

TITLE:

MAKEUP BAFFLE SPLICE PLATE

SIZE	DWG. NO.	REV
B	P1230343 WB	2

SCALE: 1:4 | WEIGHT: | SHEET 21 OF 23

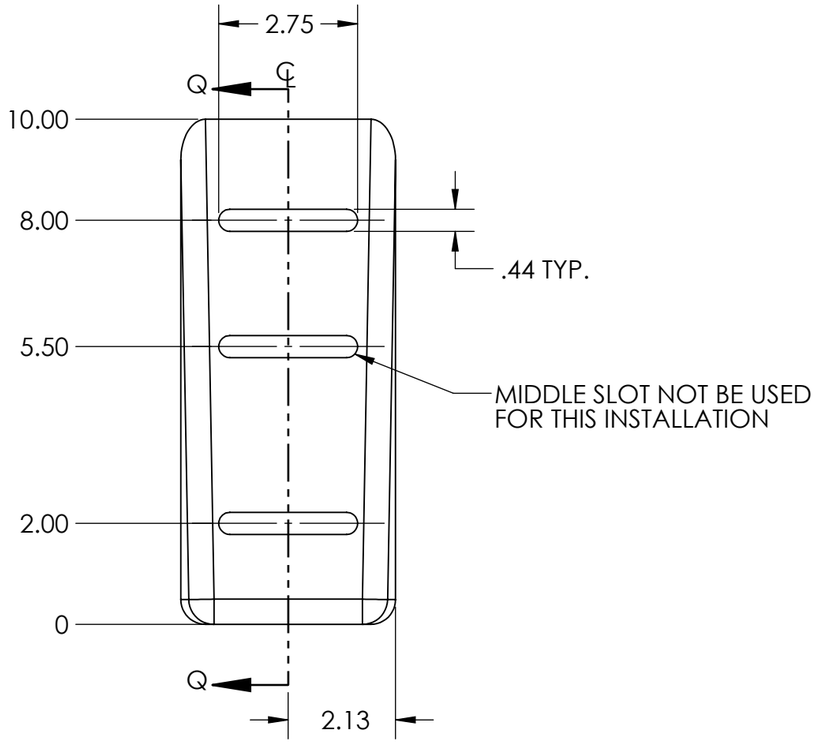

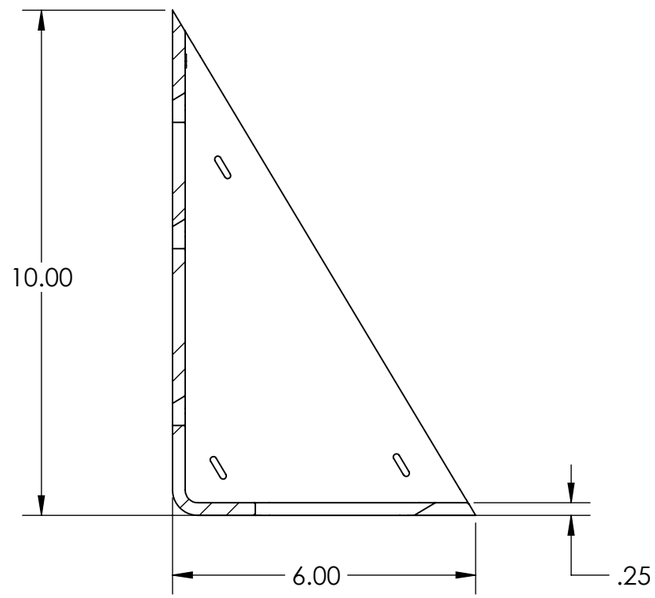

SECTION Q-Q
SCALE 1 : 3

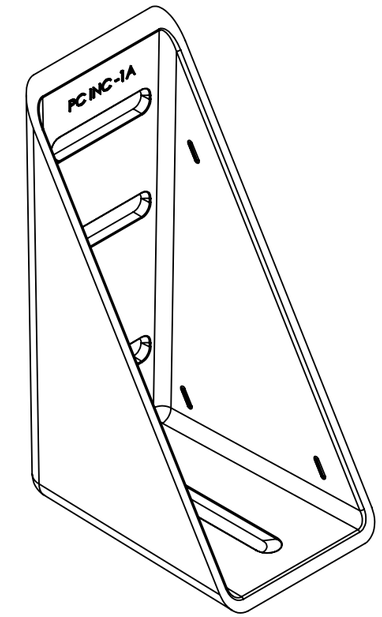

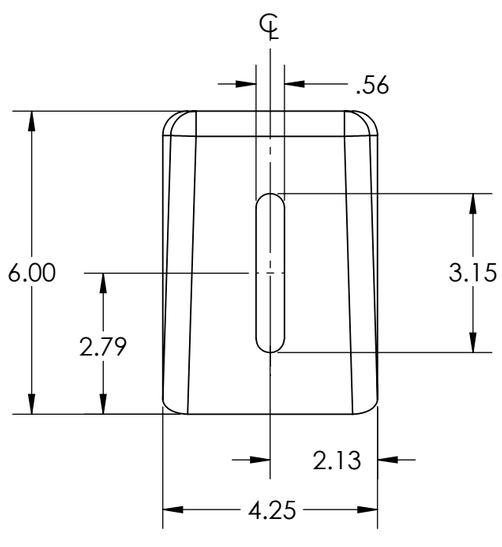

UNLESS OTHERWISE SPECIFIED:		NAME	DATE
DIMENSIONS ARE IN INCHES TOLERANCES: ANGULAR: ±1° TWO PLACE DECIMAL ± 1/16" THREE PLACE DECIMAL ± 1/32"	DRAWN	S.H.	7/28/23
	CHECKED	C.X.	7/28/23
	ENG APPR.		
	MFG APPR.		
INTERPRET GEOMETRIC TOLERANCING PER:	Q.A.		
MATERIAL	COMMENTS: PROJECT: WOONSOCKET, RI 60' DIAMETER THICKENER TANK WO#: 1230343 REF#: 23-117		
FINISH			
DO NOT SCALE DRAWING			

PROPRIETARY AND CONFIDENTIAL

THE INFORMATION CONTAINED IN THIS DRAWING IS THE SOLE PROPERTY OF PROTECTOLITE COMPOSITES INC. ANY REPRODUCTION IN PART OR AS A WHOLE WITHOUT THE WRITTEN PERMISSION OF PROTECTOLITE COMPOSITES INC IS PROHIBITED.

PROTECTOLITE™ COMPOSITES INC.

TITLE:

UPPER BAFFLE SUPPORT

SIZE	DWG. NO.	REV
B	P1230343 WB	2

SCALE: 1:3 | WEIGHT: | SHEET 22 OF 23

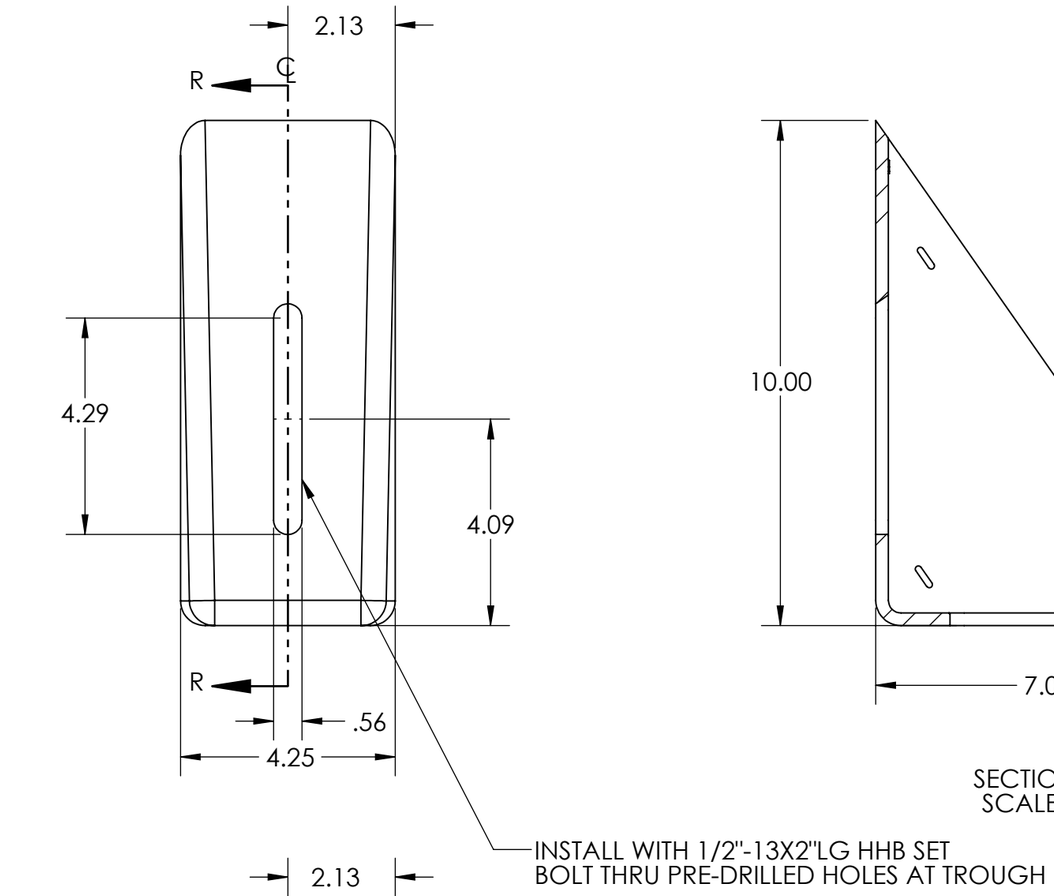

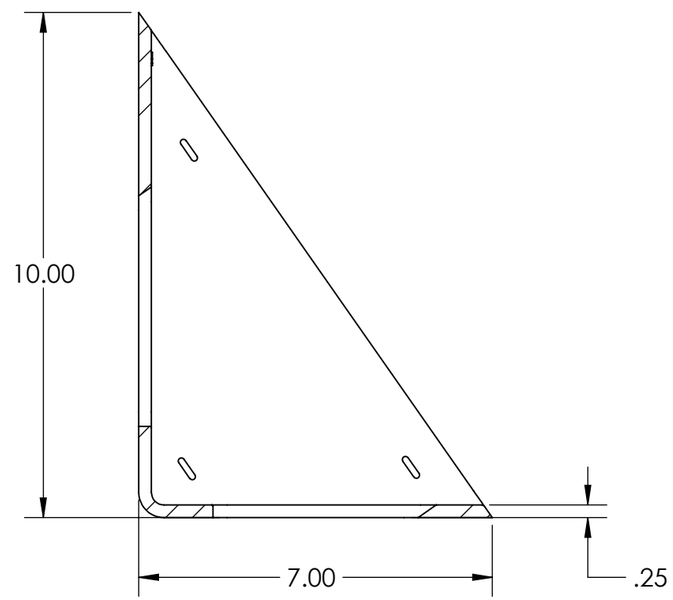

SECTION R-R
SCALE 1 : 3

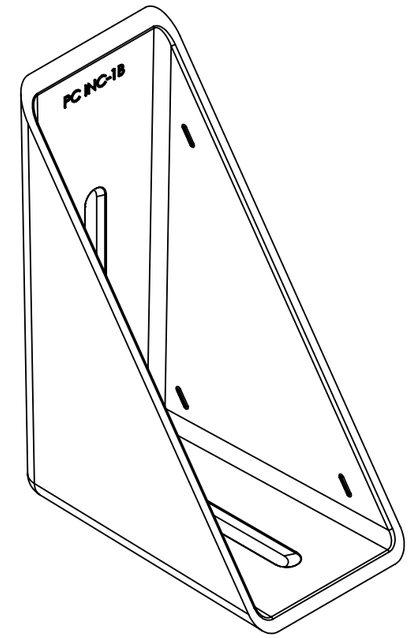

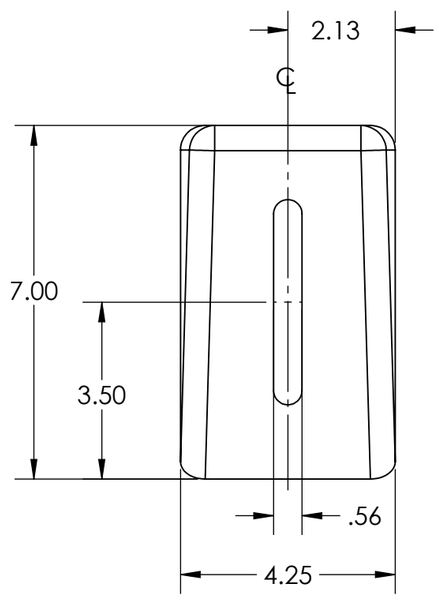

PROPRIETARY AND CONFIDENTIAL

THE INFORMATION CONTAINED IN THIS DRAWING IS THE SOLE PROPERTY OF PROTECTOLITE COMPOSITES INC. ANY REPRODUCTION IN PART OR AS A WHOLE WITHOUT THE WRITTEN PERMISSION OF PROTECTOLITE COMPOSITES INC IS PROHIBITED.

UNLESS OTHERWISE SPECIFIED:

DIMENSIONS ARE IN INCHES
TOLERANCES:
ANGULAR: ±1°
TWO PLACE DECIMAL ± 1/16"
THREE PLACE DECIMAL ± 1/32"

INTERPRET GEOMETRIC TOLERANCING PER:

MATERIAL

FINISH

DO NOT SCALE DRAWING

	NAME	DATE
DRAWN	S.H.	7/28/23
CHECKED	C.X.	7/28/23
ENG APPR.		
MFG APPR.		
Q.A.		

COMMENTS:
PROJECT: WOONSOCKET, RI
60' DIAMETER THICKENER TANK
WO#: 1230343
REF#: 23-117

PROTECTOLITE COMPOSITES INC.

TITLE:
LOWER BAFFLE SUPPORT

SIZE	DWG. NO.	REV
B	P1230343 WB	2

SCALE: 1:3 WEIGHT: SHEET 23 OF 23

SECTION 46 71 13.02

GRAVITY THICKENER MECHANISM INSTALLATION

PART 1 GENERAL – (refer to Section 46 71 13.01 – by others)

1.1 SCOPE OF WORK

A. Contractor shall install the equipment that was pre-purchased by the City according to the contract drawings and specifications included herein. Refer to the specification document for the supplied equipment (by others) in Section 46 71 13.01 for a detailed scope of the equipment being supplied, which will be installed by the Contractor. Approved submittals and shop drawings are attached for reference at the end of Section 46 71 13.01.

PART 2 EQUIPMENT – Not Used (refer to Section 46 71 13.01 – by others)

PART 3 EXECUTION

3.1 EQUIPMENT DELIVERY

A. Contractor shall be responsible for the off-loading of equipment upon the delivery from the Supplier. Contractor will be given Supplier's contact information in order to coordinate this delivery. Contractor shall work with the City to determine a safe and protected storage environment for the equipment prior to its installation. Contractor shall take over responsibility of equipment included in each shipment at the moment the Contractor begins unloading each shipment.

3.2 INSTALLATION AND TESTING

A. Contractor shall verify all dimensions in the field to ensure compliance of equipment dimensions with the drawings. Contractor shall notify Engineer of any significant deviations.

B. Installation of the equipment shall be in strict accordance with the contract documents and the Manufacturer's instructions and shop drawings. Manufacturer shall supply anchor bolts for the equipment. Contractors shall install the anchor bolts in accordance with the Manufacturer's recommendations.

C. Contractor shall coordinate Supplier's startup and testing services (included in Section 46 71 13.01). To include:

1. Supplier shall furnish the services of a factory-trained Service Engineer for One (1) trip and one (1) day for start-up, commissioning, and operator training once the unit is installed.

2. Equipment shall not be energized, or "bumped", to check the electrical connection for motor rotation without installation inspection and the Service Engineer present.

3. The Service Engineer shall test rotate each thickener for 2 complete revolutions, inspect the installation, and make recommendations for any necessary mechanical adjustments by the Contractor.

4. The Service Engineer shall conduct a torque test during the start-up and commissioning to demonstrate proper operation of the overload system.

5. The Service Engineer shall conduct a training for the Operators at the facility to operate, perform maintenance, and troubleshoot the mechanism and its components.

6. The Service Engineer shall provide a detailed final report of the testing and training conducted. This report shall be submitted to the City and Operators.

END OF SECTION

CITY OF WOONSOCKET, RHODE ISLAND

GRAVITY THICKENER IMPROVEMENTS
WOONSOCKET WWTF 11 CUMBERLAND HILL RD, WOONSOCKET, RI 02895

DRAWING INDEX

SHEET	TITLE
G-001	SHEET 1 OF 7 - COVER
D-001	SHEET 2 OF 7 - EXISTING GRAVITY THICKENER DEMOLITION
M-001	SHEET 3 OF 7 - PROCESS MECHANICAL IMPROVEMENTS
M-002	SHEET 4 OF 7 - PROCESS MECHANICAL DETAILS
E-001	SHEET 5 OF 7 - ELECTRICAL SYMBOLS, NOTES, & DETAILS
E-002	SHEET 6 OF 7 - ELECTRICAL DEMOLITION PLANS
E-003	SHEET 7 OF 7 - ELECTRICAL IMPROVEMENT PLANS

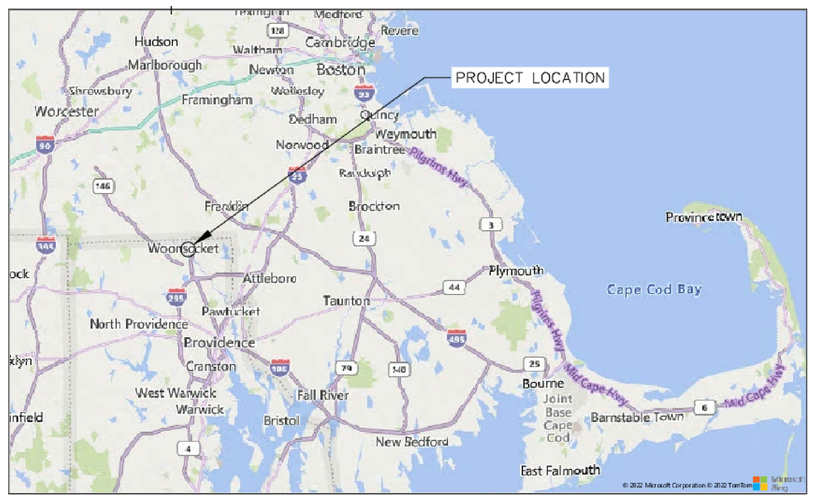

REGIONAL
LOCATION MAP

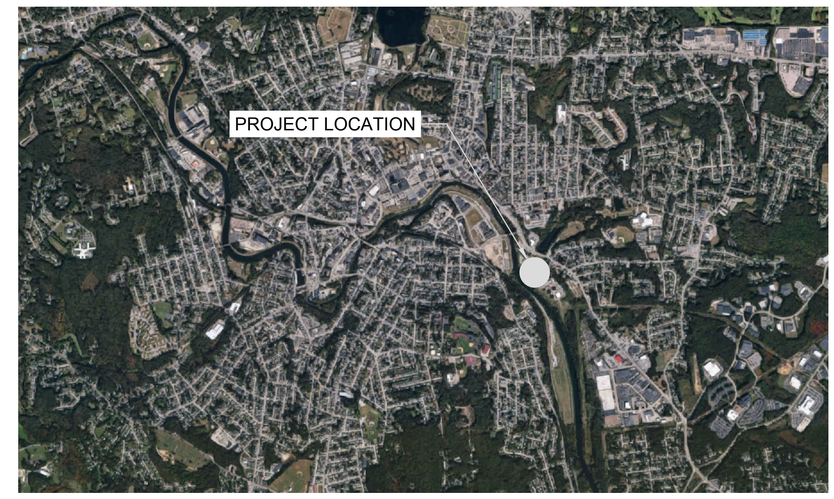

PROJECT
LOCATION MAP

CITY COUNCIL
CHRISTOPHER BEAUCHAMP, PRESIDENT
VALERIE GONZALEZ, VICE PRESIDENT
GARRETT MANCIERI
SCOTT MCGEE
DAVID SOUCY
BRIAN THOMPSON
JOHN WARD

CITY MAYOR
LISA BALDELLI-HUNT

DIRECTOR OF PUBLIC WORKS
STEVEN D'AGOSTINO

Weston & Sampson

Weston & Sampson Engineers, Inc.
55 Walkers Brook Drive, Suite 100
Reading, MA 01867
978.532.1900 800.SAMPSON

www.westonandsampson.com

KENT M. NICHOLS, JR.
No. 6458
REGISTERED PROFESSIONAL ENGINEER CIVIL

Issued Date:

SEPTEMBER 2023

811 Know what's below. Call before you dig.

Issued For:

BIDDING

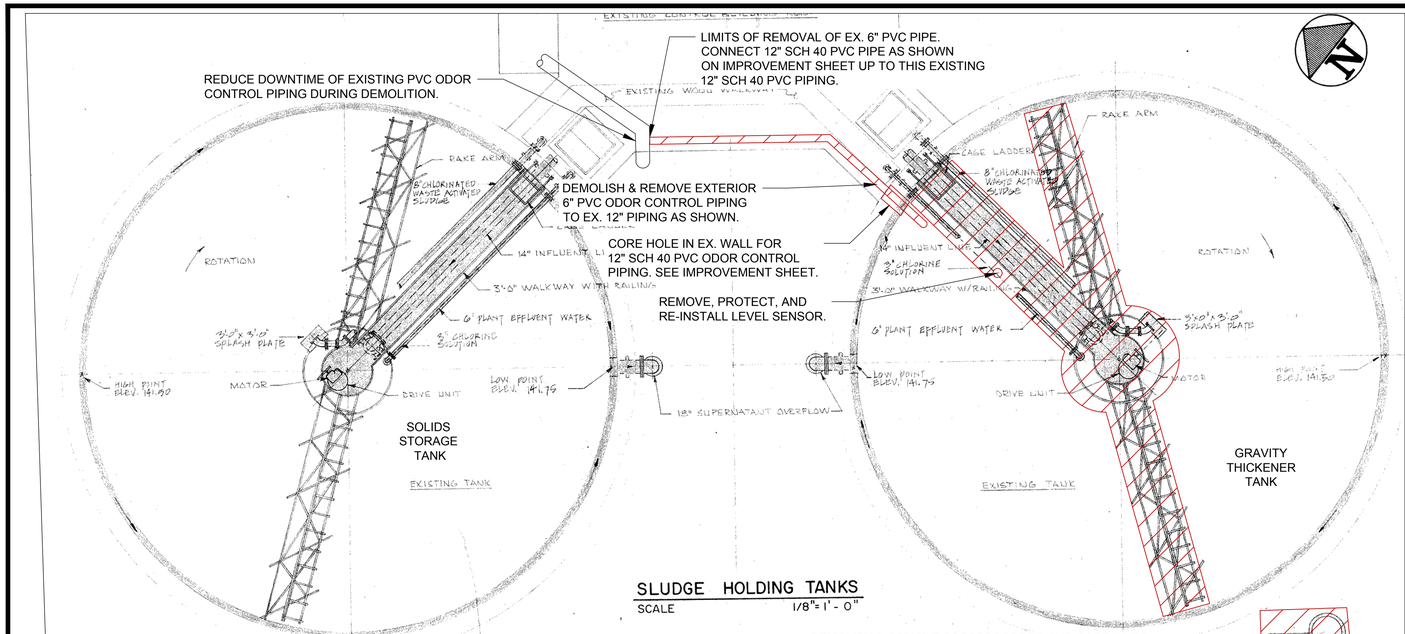

SLUDGE HOLDING TANKS

SCALE 1/8" = 1' - 0"

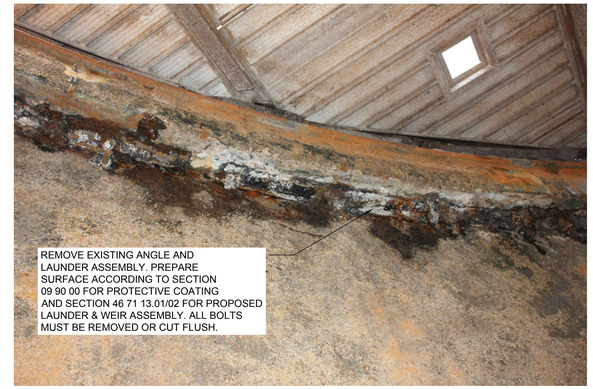

EXISTING LAUNDER PHOTO - FOR REMOVAL

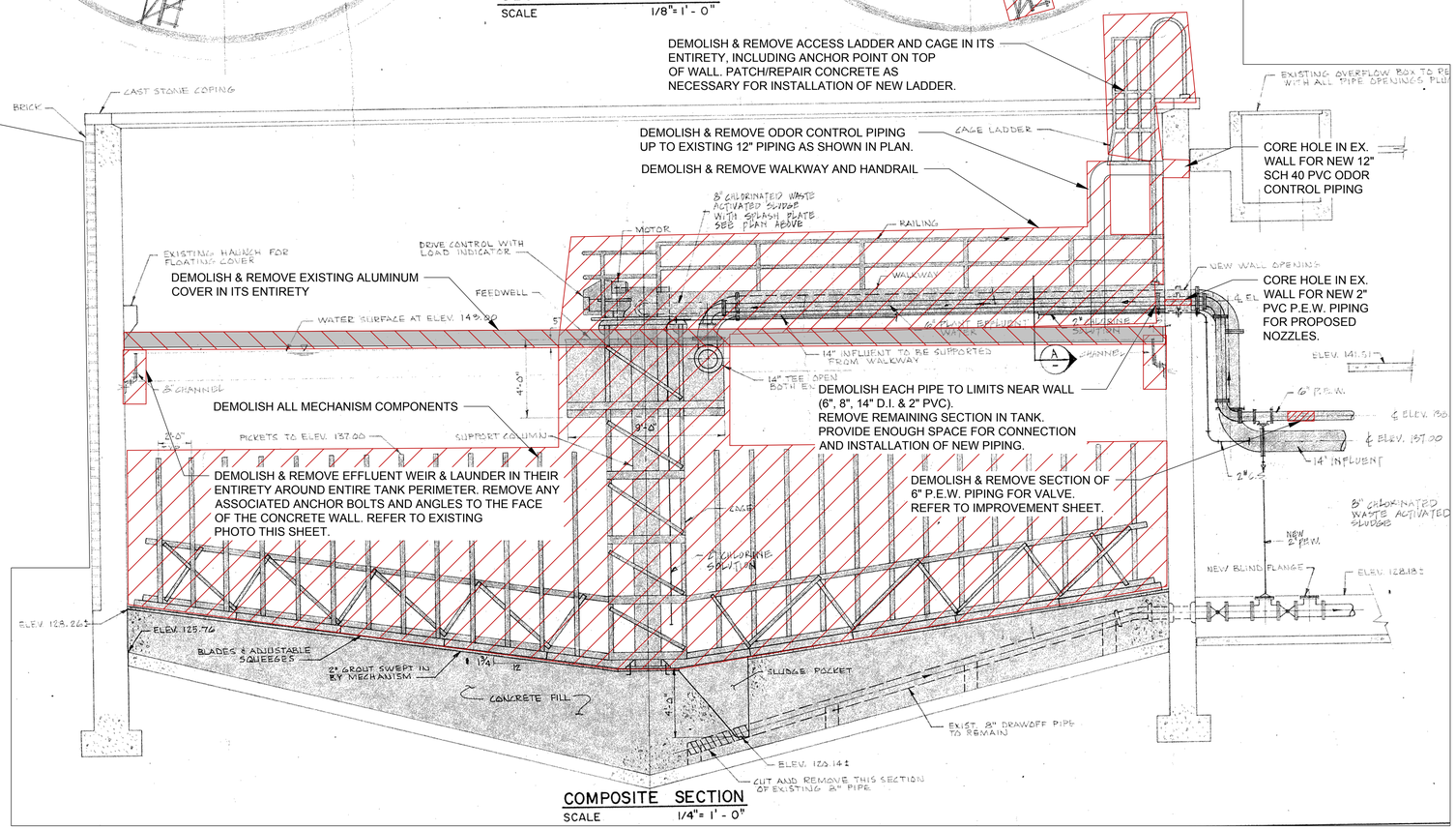

COMPOSITE SECTION

SCALE 1/4" = 1' - 0"

GRAVITY THICKENER REMOVALS

REMOVAL NOTES:

1. PROTECT ALL COMPONENTS TO REMAIN AGAINST DAMAGE. CONTRACTOR SHALL REPAIR OR REPLACE ANY DAMAGED COMPONENTS TO THE SATISFACTION OF THE ENGINEER AT NO COST TO THE OWNER.
2. OWNER RESERVES THE RIGHT TO SALVAGE ANY AND ALL MATERIAL THAT IS SCHEDULED TO BE REMOVED. OWNER WILL MARK OR INFORM THE CONTRACTOR OF ANY ITEMS TO BE SALVAGED PRIOR TO DEMOLITION. CONTRACTOR SHALL PROTECT THESE ITEMS DURING THE REMOVAL PROCESS.

CONSTRUCTION NOTES:

1. UNDERGROUND UTILITY LOCATIONS SHOWN HEREON ARE BASED ON UTILITY EVIDENCE VISIBLE AT GROUND SURFACE AND RECORD DRAWINGS AND ARE SUBJECT TO FIELD VERIFICATION BY EXCAVATION. UTILITIES SHOWN DO NOT PURPORT TO CONSTITUTE OR REPRESENT ALL UTILITIES LOCATED UPON OR ADJACENT TO THE PROJECT AREA.
2. THE CONTRACTOR SHALL CALL DIGSAFE AT 1-888-344-7233 AT LEAST 72 HOURS, SATURDAYS, SUNDAYS, AND HOLIDAYS EXCLUDED, PRIOR TO EXCAVATING AT ANY LOCATION. A COPY OF THE DIGSAFE PROJECT REFERENCE NUMBER(S) SHALL BE GIVEN TO THE OWNER PRIOR TO EXCAVATION.
3. SIDEWALKS, GRASS AREAS, AND OTHER LANDSCAPE FEATURES SHALL BE REMOVED AND REPLACED AS NECESSARY TO PERFORM THE WORK. CONTRACTOR SHALL RESET OR REBUILD ANY ITEMS DAMAGED OR DISTURBED DURING CONSTRUCTION TO THE SATISFACTION OF THE OWNER AND ENGINEER.
4. ALL PAVEMENT DISTURBED BY THE CONTRACTOR'S OPERATIONS SHALL BE REPLACED IN KIND.
5. CONTRACTOR SHALL REMOVE AND REPLACE, OR REPAIR, ALL CURBS, SIDEWALKS, PAVEMENT, AND OTHER ITEMS DAMAGED BY THEIR CONSTRUCTION ACTIVITIES TO THE SATISFACTION OF THE OWNER AND ENGINEER.
6. ALL AREAS DISTURBED BY THE CONTRACTOR BEYOND PAYMENT LIMITS SHALL BE RESTORED AT NO ADDITIONAL COST TO THE OWNER.
7. THE LOCATION AND LIMITS OF ALL ON-SITE WORK AND STORAGE AREAS SHALL BE REVIEWED WITH, COORDINATED WITH, AND ACCEPTABLE TO THE OWNER AND ENGINEER. THE CONTRACTOR SHALL LIMIT THE ACTIVITIES IN THESE AREAS.
8. WHERE NEW PIPING IS TO BE CONNECTED TO EXISTING PIPING, THE CONTRACTOR SHALL FURNISH AND INSTALL ALL ADAPTERS, GASKETS, FITTINGS, AND ADDITIONAL PIPE AS REQUIRED TO COMPLETE THE CONNECTION AT NO ADDITIONAL COST TO THE OWNER.
9. CONTRACTOR SHALL BE RESPONSIBLE FOR THE LAYOUT OF ALL PROPOSED WORK AS SHOWN ON THE DRAWINGS. LAYOUT SHALL BE REVIEWED BY ENGINEER AND OWNER PRIOR TO START OF THE WORK.
10. EXISTING ELEVATIONS, DIMENSIONS, AND AS-BUILT DRAWINGS WERE TAKEN FROM MULTIPLE RECORD DRAWINGS CREATED WITH AN UNKNOWN DATUM. CONTRACTOR SHALL VERIFY THE ELEVATIONS BY USING A LOCAL BENCHMARK. CONTRACTOR SHALL VERIFY ALL ELEVATIONS AND DIMENSIONS AS NECESSARY TO COMPLETE THE WORK.
11. THE CONTRACTOR SHALL NOT HAVE ANY RIGHT OF PROPERTY, IN ANY MATERIALS TAKEN FROM AN EXCAVATION. SUITABLE EXCAVATED MATERIAL MAY BE INCORPORATED IN THE PROJECT, WITH EXCESS MATERIAL DISPOSED OF AT A LOCATION PROVIDED BY THE CONTRACTOR. THESE PROVISIONS SHALL IN NO WAY RELIEVE THE CONTRACTOR OF HIS OBLIGATIONS TO PROPERLY DISPOSE OF AND REPLACE ANY MATERIAL DETERMINED BY THE ENGINEER TO BE UNSUITABLE FOR BACKFILLING. THE CONTRACTOR SHALL DISPOSE OF UNSUITABLE AND EXCESS MATERIAL IN ACCORDANCE WITH THE APPLICABLE SECTIONS OF THE CONTRACT DOCUMENTS.
12. THE CONTRACTOR SHALL BE RESPONSIBLE FOR REMOVING AND DISPOSING OF ALL DEMOLISHED MATERIALS. DISPOSAL SHALL BE IN ACCORDANCE WITH ALL STATE AND LOCAL REGULATIONS. OWNER RESERVES THE RIGHT TO SALVAGE ANY AND ALL EQUIPMENT OR MATERIALS AS DESIRED. OWNER WILL MARK ITEMS TO SALVAGE PRIOR TO DEMOLITION.
13. THE CONTRACTOR SHALL COMPLY WITH ALL APPLICABLE REGULATIONS OF THE OCCUPATIONAL SAFETY AND HEALTH ADMINISTRATIONS (OSHA), AND ALL OTHER OVERSIGHT AGENCIES.
14. CONTRACTOR SHALL ARRANGE WITH THE OWNER FOR ACCESS TO THE WORK SITES DURING THE CONSTRUCTION WORK.

Project:
CITY OF WOONSOCKET
RHODE ISLAND

GRAVITY THICKENER IMPROVEMENTS
WOONSOCKET WWTF
11 CUMBERLAND HILL RD
WOONSOCKET, RI 02895

Weston & Sampson
Weston & Sampson Engineers, Inc.
55 Walkers Brook Drive, Suite 100
Reading, MA 01867
978.532.1900 800.SAMPSON
www.westonandsampson.com

Consultants:

Revisions:

No.	Date	Description

COA:

Seal:
KENT M. NICHOLS, JR.
No. 6458
REGISTERED PROFESSIONAL ENGINEER CIVIL

Issued For:
BIDDING

Scale: AS NOTED

Date: 09/26/23
Drawn By: JSS
Reviewed By: JSS / CWS
Approved By: KMN
W&S Project No.: ENG23-0204
W&S File No.:

Drawing Title:
EXISTING GRAVITY THICKENER DEMOLITION

Sheet Number:
D-001
SHEET 2 / 7

COPYRIGHT © 2023 WESTON & SAMPSON, INC.

P:\Willimantic_RENO\230204 - WWTF D1 Rehab\Upgrades\CAD\Dwg Release - End.dwg

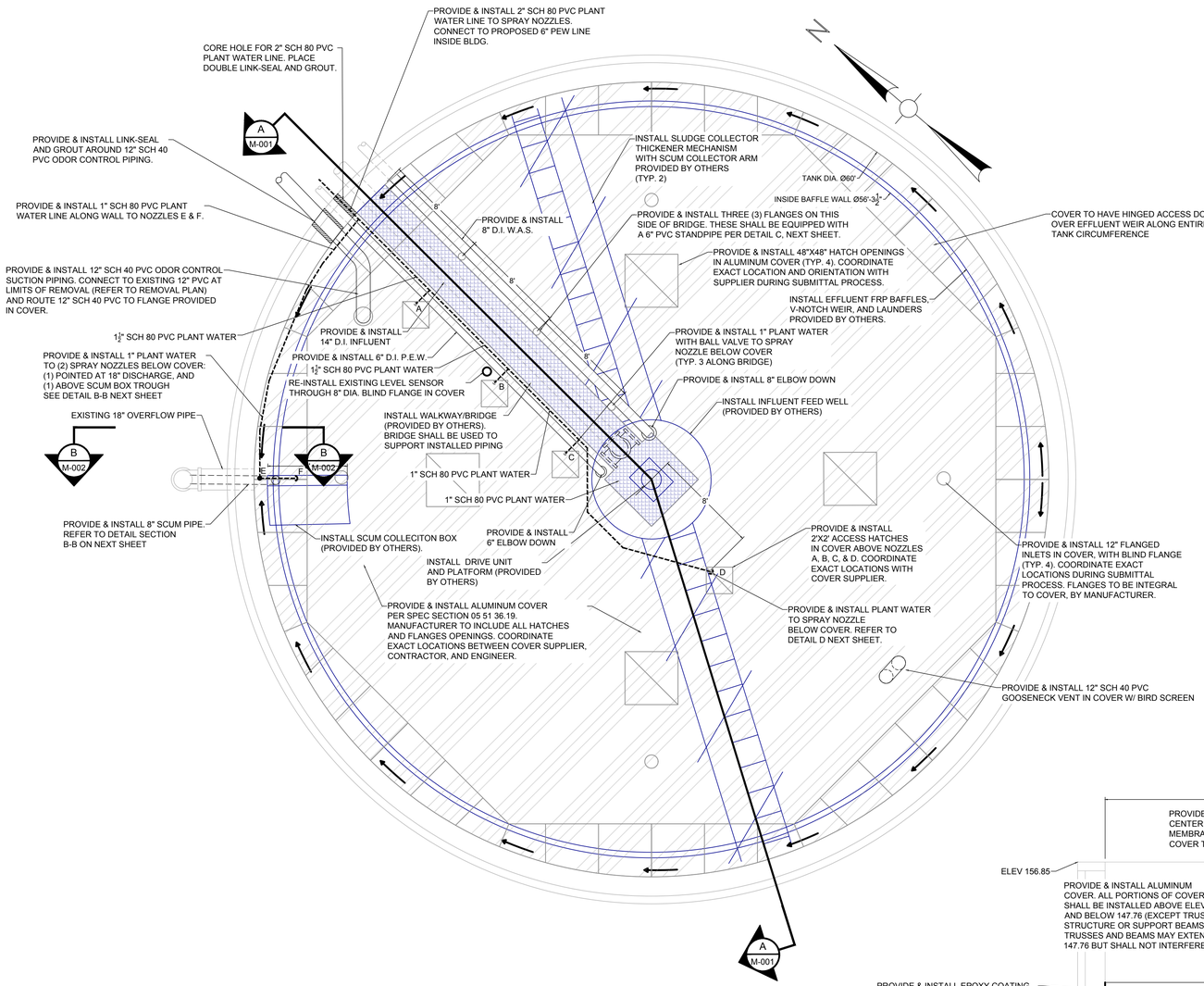

GRAVITY THICKENER IMPROVEMENTS - PLAN VIEW

0 5 10 15

SCALE: 1" = 5'

IMPROVEMENT NOTES:

1. PROTECT ALL COMPONENTS TO REMAIN AGAINST DAMAGE. CONTRACTOR SHALL REPAIR OR REPLACE ANY DAMAGED COMPONENTS TO THE SATISFACTION OF THE ENGINEER AT NO COST TO THE OWNER.
2. ALL EQUIPMENT & MATERIALS DESCRIBED IN REFERENCE SECTION 46 71 13.01 AND THE APPROVED SUBMITTAL PACKAGE FOR PRE-PURCHASED EQUIPMENT INCLUDED AS "ATTACHMENT A" IN SECTION 46 71 13.01 ARE SUPPLIED BY OTHERS & TO BE INSTALLED BY THE CONTRACTOR. CONTRACTOR IS RESPONSIBLE FOR PROVIDING ANY AND ALL COMPONENTS THAT ARE NOT INCLUDED IN THE SCOPE OF SUPPLY FOR PREVIOUSLY PURCHASED EQUIPMENT BUT ARE REQUIRED FOR A COMPLETE INSTALLATION.
3. CONTRACTOR IS RESPONSIBLE FOR UNLOADING THE EQUIPMENT PROVIDED BY OTHERS UPON ITS DELIVERY TO THE SITE AND PROVIDING ALL MATERIALS AND LABOR NECESSARY TO PROPERLY STORE ALL EQUIPMENT UNTIL IT IS INSTALLED. CONTACT INFORMATION FOR THIS COORDINATION IS PROVIDED IN SECTION 46 71 13.01 ATTACHMENT A.

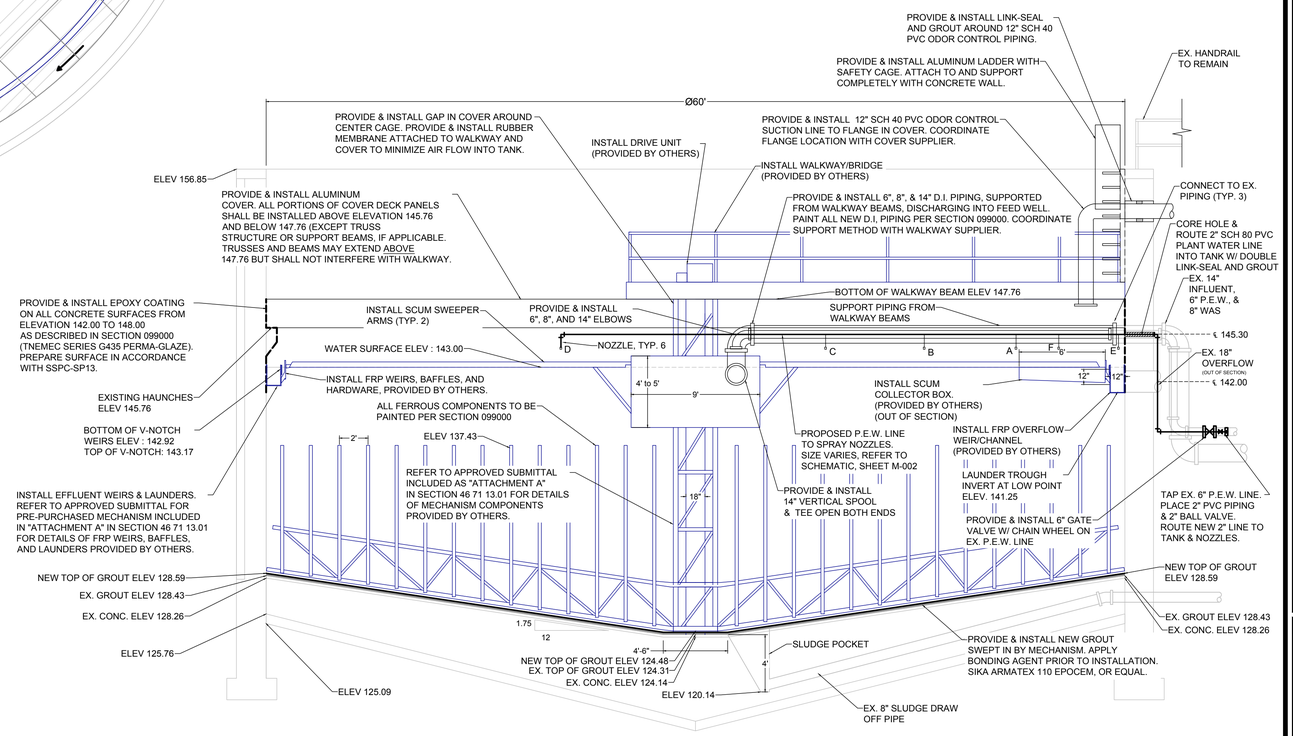

IMPROVEMENTS SECTION (A)

0 5 10 15

SCALE: 1" = 5'

Project:
CITY OF WOONSOCKET
RHODE ISLAND

GRAVITY THICKENER IMPROVEMENTS
WOONSOCKET WWTF
11 CUMBERLAND HILL RD
WOONSOCKET, RI 02895

Weston & Sampson Engineers, Inc.
55 Walkers Brook Drive, Suite 100
Reading, MA 01867
978.532.1900 800.SAMPSON
www.westonandsampson.com

Consultants:

Revisions:

No.	Date	Description

COA:

Seal: KENT M. NICHOLS, JR. No. 6458 REGISTERED PROFESSIONAL ENGINEER CIVIL

Issued For: BIDDING

Scale: AS NOTED

Date:	09/26/23
Drawn By:	JSS
Reviewed By:	JSS / CWS
Approved By:	KMN
W&S Project No.:	ENG23-0204
W&S File No.:	

Drawing Title: PROCESS MECHANICAL IMPROVEMENTS

Sheet Number: M-001

SHEET 3 / 7

COPYRIGHT © 2023 WESTON & SAMPSON, INC.

P:\Woonsocket 883\ENG23\204 - WWTF G1 Bend Upgrades\CAD\mech\Mechanical - Final.dwg

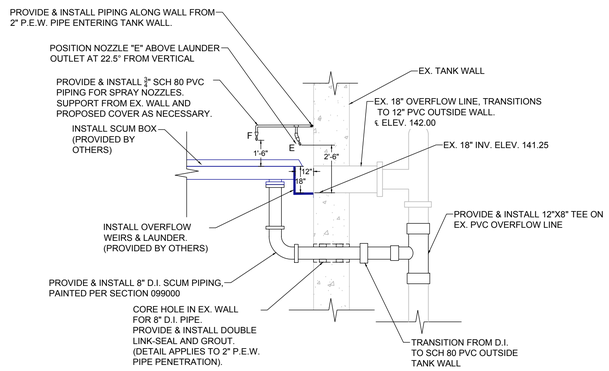

DETAIL SECTION (B)

0 4 8 12

SCALE: 1/4" = 1'

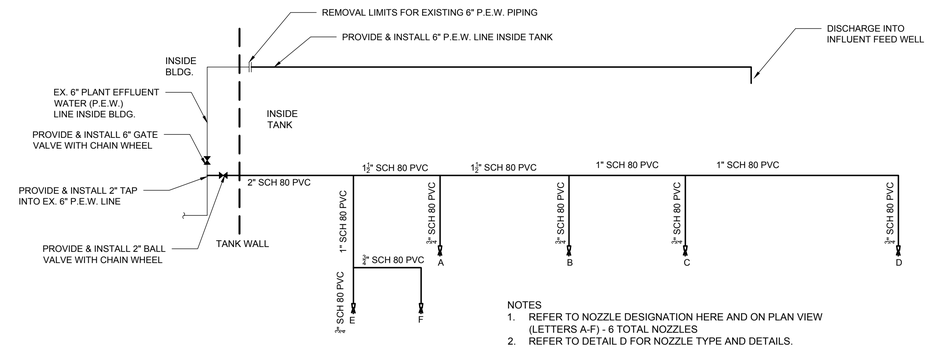

NOTES
1. REFER TO NOZZLE DESIGNATION HERE AND ON PLAN VIEW (LETTERS A-F) - 6 TOTAL NOZZLES
2. REFER TO DETAIL D FOR NOZZLE TYPE AND DETAILS.

PLANT WATER SPRAY NOZZLE SYSTEM - SCHEMATIC DIAGRAM

NO SCALE

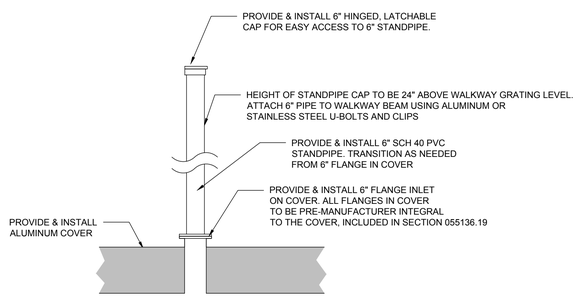

THIS DETAIL IS TYPICAL FOR THREE (3) LOCATIONS). EXACT LOCATION TO BE COORDINATED WITH COVER SUPPLIER BASED ON WALKWAY AND PIPING GEOMETRY.

DETAIL C - SAMPLING TUBE ACCESS PORT IN COVER

0 2 4 8

SCALE: 1/2" = 1'

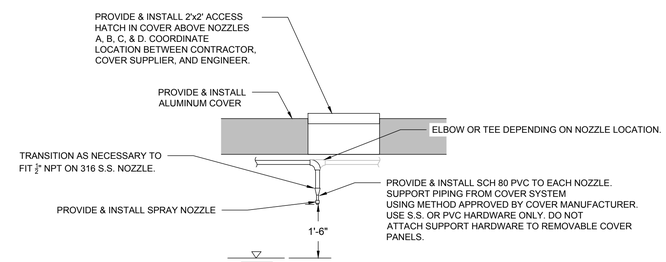

THIS DETAIL IS TYPICAL FOR SIX (6) LOCATIONS (NOZZLES A, THRU F). EXACT LOCATION TO BE COORDINATED WITH COVER SUPPLIER BASED ON WALKWAY AND PIPING GEOMETRY.

DETAIL D - P.E.W. SPRAY NOZZLE

0 2 4 8

SCALE: 1/2" = 1'

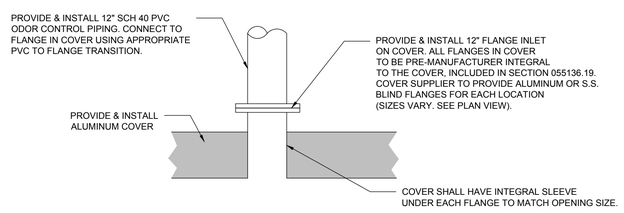

DETAIL E - ODOR CONTROL CONNECTION IN COVER

0 2 4 8

SCALE: 1/2" = 1'

Project:
CITY OF WOONSOCKET
RHODE ISLAND

GRAVITY THICKENER IMPROVEMENTS
WOONSOCKET WWTF
11 CUMBERLAND HILL RD
WOONSOCKET, RI 02895

Weston & Sampson
Weston & Sampson Engineers, Inc.
55 Walkers Brook Drive, Suite 100
Reading, MA 01867
978.532.1900 800.SAMPSON
www.westonandsampson.com

Consultants:

Revisions:

No.	Date	Description

COA:

Seal:

KENT M. NICHOLS, JR. No. 6458 REGISTERED PROFESSIONAL ENGINEER CIVIL

Issued For:
BIDDING

Scale: AS NOTED

Date:	09/26/23
Drawn By:	JSS
Reviewed By:	JSS / CWS
Approved By:	KMN
W&S Project No.:	ENG23-0204
W&S File No.:	

Drawing Title:
PROCESS MECHANICAL DETAILS

Sheet Number:
M-002
SHEET 4 / 7

COPYRIGHT © 2023 WESTON & SAMPSON, INC.

P:\Woonsocket, RI\ENG23-0204 - WWTF CT Rehab\Engineer\CAD\Cmds\Tickness - Final.dwg

SYMBOL LIST

LEGEND NOTES:

A. THIS SHEET IS A GENERAL LIST OF SYMBOLS AND ABBREVIATIONS AND SHALL BE USED AS A DICTIONARY TO DEFINE ITEMS INDICATED ON DRAWINGS. NOT ALL SYMBOLS OR ABBREVIATIONS ARE NECESSARILY USED ON THIS PROJECT. ALL EQUIPMENT IS TO BE PROVIDED UNDER THIS SECTION UNLESS SPECIFICALLY INDICATED OTHERWISE.

MISCELLANEOUS-DEVICES

1 / E-003 — DETAIL IDENTIFIER-INDICATES DETAIL #1 ON DWG. E-003.

2 / E-003 — A A — SECTION IDENTIFIER- INDICATES SECTION A-A, DETAIL #2 ON DWG. E-003.

WIRING AND RACEWAYS

WIRING AND RACEWAY - NO. OF DIAGONAL LINES INDICATES NO. #12 AWG CONDUCTORS. ABSENCE OF DIAGONAL LINES INDICATES 2 #12 AWG+#12AWG GROUND UNLESS NOTED OTHERWISE. GROUND WIRE IS NOT SHOWN IN COUNT BUT SHALL BE PROVIDED.

FLEXIBLE CONNECTION TO EQUIPMENT

EXISTING EQUIPMENT

DOTTED DENOTES EXISTING EQUIPMENT.

X — EXISTING EQUIPMENT TO BE REMOVED AND CIRCUIT PULLED BACK TO NEXT ACTIVE OUTLET/BACK TO PANEL.

XM — EXISTING EQUIPMENT TO REMAIN.

XR — EXISTING EQUIPMENT TO BE REMOVED AND RELOCATED.

XL — NEW LOCATION OF RELOCATED EXISTING EQUIPMENT.

XN — EXISTING EQUIPMENT TO BE REMOVED AND NEW EQUIPMENT INSTALLED IN SAME LOCATION.

RR — REMOVE AND REINSTALL IN SAME LOCATION.

POWER

277/480 VOLT, 3 PHASE, 4 WIRE PANELBOARD.

J — JUNCTION BOX - SIZE AS REQUIRED.

3R — FUSED DISCONNECT SWITCH HEAVY DUTY TYPE-"3R" INDICATES NEMA 3R
20 — INDICATES TIME DELAY FUSE SIZE.
30 — INDICATES SAFETY SWITCH SIZE

3R — UNFUSED DISCONNECT SWITCH HEAVY DUTY TYPE-"3R" INDICATES NEMA 3R

VFD — VARIABLE FREQUENCY DRIVE. FURNISHED BY OTHERS, INSTALLED AND WIRED BY E.C..

CP — EQUIPMENT CONTROL PANEL.

M — MOTOR

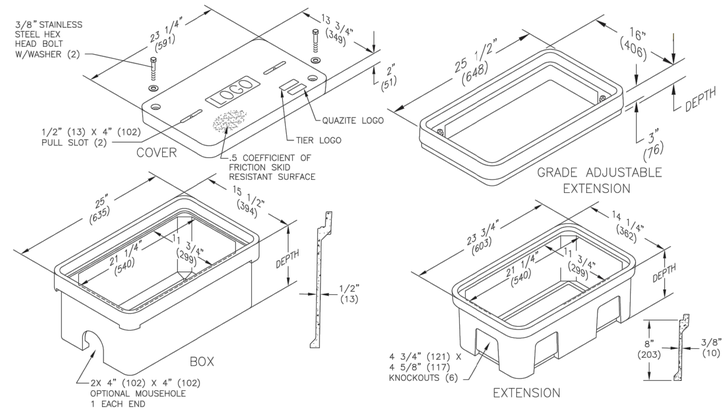

4 / E-001 ELECTRICAL HANDHOLE DETAIL

SCALE: N.T.S.

ELECTRICAL GENERAL NOTES

1. THE SCOPE OF WORK SHALL INCLUDE PROVIDING ALL WORK INDICATED, AND COORDINATION WITH ALL TRADES. SCOPE OF WORK IS INDICATED ON THE CONTRACT DOCUMENTS INCLUDING THE DRAWINGS AND THE SPECIFICATIONS, WHICH ARE COMPLIMENTARY. WORK INDICATED IN ANY CONTRACT DOCUMENT SHALL BE CONSIDERED PART OF THE SCOPE OF WORK. IN GENERAL, WORK REQUIREMENTS ARE NOT INDICATED IN BOTH DOCUMENTS . WHERE DOCUMENTS CONFLICT WITHIN THEMSELVES OR WITH CODES AND REGULATIONS, PROVIDE THE HIGHER QUANTITY AND QUALITY AND FOLLOW THE STRICTER REQUIREMENTS.
2. COORDINATE WITH THE GENERAL CONTRACTOR, OTHER TRADES AND OF MANUFACTURERS EQUIPMENT AND MAKE ALL FINAL CONNECTIONS AS REQUIRED, I.E., POWER, CONTROL, INTERLOCK, ETC.
3. ELECTRICAL WORK SHALL BE IN ACCORDANCE WITH OSHA, NFPA STANDARDS, THE ELECTRICAL CODE AND THE LOCAL GOVERNING AUTHORITIES. THE DRAWINGS AND SPECIFICATIONS DO NOT ATTEMPT TO INDICATE ALL WORK REQUIRED BY CODES AND AUTHORITIES.
4. TEST ALL EQUIPMENT AND SYSTEMS INSTALLED TO CERTIFY COMPLIANCE WITH DRAWINGS, SPECIFICATIONS, CODES, LOCAL AUTHORITIES AND REGULATIONS. INCLUDE LABOR AND COSTS FOR TESTING, REVIEWS, APPROVALS AND CERTIFICATIONS.
5. DRAWINGS ARE DIAGRAMMATIC ONLY. EXACT LOCATION, MOUNTING HEIGHTS OF EQUIPMENT AND ROUTING OF RACEWAYS SHALL BE COORDINATED WITH THE EQUIPMENT REQUIREMENTS AND FIELD CONDITIONS.
6. FURNISH AND INSTALL ALL INCIDENTAL ACCESSORIES NECESSARY TO MAKE THE ELECTRICAL WORK COMPLETE AND READY FOR OPERATION.
7. SUPPORT ALL WORK FROM THE BUILDING STRUCTURE.
8. ALL MOUNTING HEIGHTS ARE TO CENTERLINE UNLESS OTHERWISE INDICATED.
9. IF EXACT MOUNTING OR RACEWAY ROUTINGS ARE NOT INDICATED (LOCATION OR HEIGHT) REQUEST CLARIFICATION PRIOR TO ROUGHING, OR INSTALLATION.
10. WIRE AND CONDUIT SIZES INDICATED ON HOMERUNS SHALL BE CONTINUOUS THROUGHOUT CIRCUIT.
11. INSTALL A GREEN GROUNDING CONDUCTOR WITHIN EACH RACEWAY SIZED IN ACCORDANCE WITH THE ELECTRIC CODE.
12. PROVIDE WATERTIGHT AND GAS TIGHT SEALS INSIDE AND OUTSIDE OF CONDUITS THAT PENETRATE THE BUILDING BELOW GRADE, O.Z. GEDNEY OR APPROVED EQUAL. PROVIDE WEATHER TIGHT SEAL AT PENETRATIONS ABOVE GRADE.
13. PROVIDE NRTL LISTED SMOKE AND FIRE SEALS AT ALL PENETRATIONS THROUGH FLOORS OR FULL HEIGHT (SLAB TO SLAB) WALLS.
14. ALL BRANCH CIRCUIT CONDUCTORS SHALL BE COPPER MINIMUM #12 AWG. SIZE UNLESS OTHERWISE INDICATED.
15. PROVIDE A PULL LINE IN EVERY EMPTY CONDUIT PROVIDED UNDER THIS SECTION.
16. ALTHOUGH ALL BRANCH CIRCUIT WIRE AND CONDUIT IS NOT SHOWN, IT IS THE INTENT OF THESE DOCUMENTS THAT A COMPLETE BRANCH CIRCUIT WIRING SYSTEM BE PROVIDED.
17. RACEWAYS SHALL BE LIMITED TO SIX CURRENT CARRYING CONDUCTORS (THREE PHASE AND THREE NEUTRALS) AND GROUNDING CONDUCTOR, UNLESS OTHERWISE INDICATED. PROVIDE A DEDICATED NEUTRAL CONDUCTOR FOR EACH SINGLE PHASE RECEPTACLE CIRCUIT UNLESS AN OVERSIZED NEUTRAL IS SPECIFICALLY INDICATED.

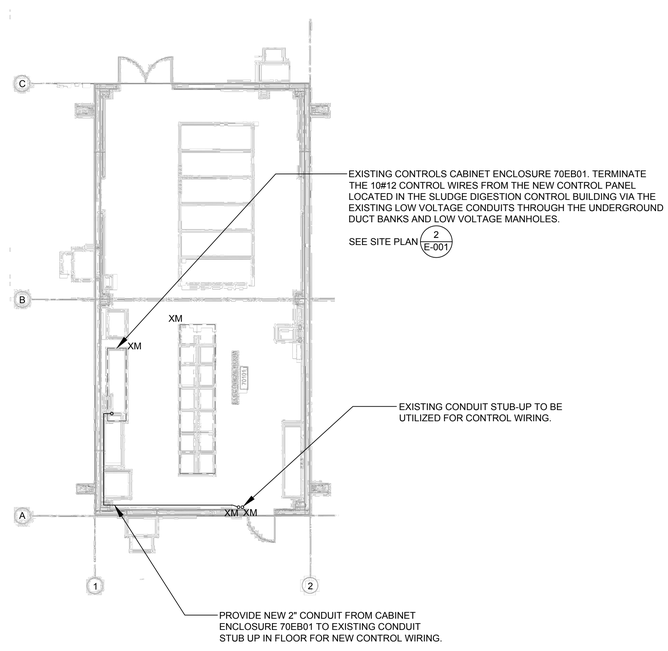

1 / E-001 ELECTRIC ROOM 70101

SCALE: 1/8"=1'-0"

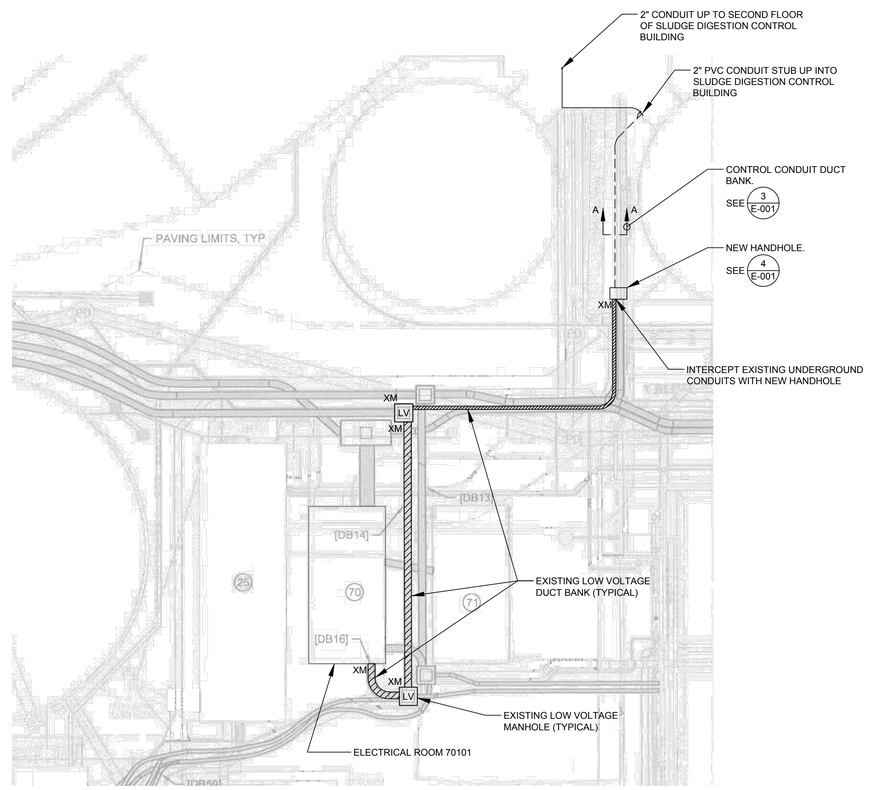

2 / E-001 ELECTRICAL SITE PLAN

SCALE: 1"=20'-0"

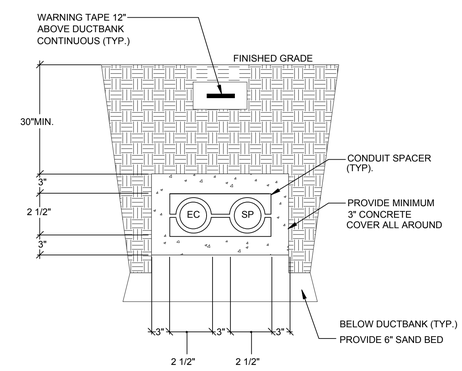

3 / E-001 DUCT BANK SECTION "A-A"

SCALE: N.T.S.

EC — 2" CONTROL- SCHEDULE 40 P.V.C. PROVIDE PULL LINE IN CONDUIT.

SP — 2" SPARE - SCHEDULE 40 P.V.C. PROVIDE PULL LINE IN CONDUIT.

Project:
CITY OF WOONSOCKET
RHODE ISLAND
GRAVITY THICKENER IMPROVEMENTS
WOONSOCKET WWTF
11 CUMBERLAND HILL RD
WOONSOCKET, RI 02895

Weston & Sampson
Weston & Sampson Engineers, Inc.
55 Walkers Brook Drive, Suite 100
Reading, MA 01867
978.532.1900 800.SAMPSON
www.westonandsampson.com

Consultants:
GGD Consulting Engineers, Inc.
375 Faunce Corner Road, Suite D, Dartmouth, MA 02747-1258
p: 508-998-5700 • f: 508-998-0883 • www.g-g-d.com

Revisions:

No.	Date	Description

COA:

Seal: DAVID M. PEREIRA No. 11193 REGISTERED PROFESSIONAL ENGINEER ELECTRICAL

Issued For: BIDDING

Scale:

Date: 09/26/23
Drawn By: MLP
Reviewed By: DMP
Approved By:
W&S Project No.: ENG23-0204
W&S File No.:

Drawing Title: ELECTRICAL SYMBOL LIST, NOTES AND PLANS

Sheet Number: E-001
SHEET 5/7

COPYRIGHT © 2023 WESTON & SAMPSON, INC.

K:\WES\70N & SAMPSON\00.000 Woonsocket WWTF Gravity Thickener\Drawings\ELEC\E-01.dwg

GENERAL DEMOLITION NOTES:

1. REFER TO DEMOLITION SECTION OF SPECIFICATION FOR ADDITIONAL REQUIREMENTS.
2. WHERE DOWNSTREAM DEVICES ARE AFFECTED BY THE DEMOLITION WORK THIS CONTRACTOR SHALL PROVIDE NEW WIRING AS REQUIRED TO MAINTAIN SUCH DOWNSTREAM DEVICES.
3. ALL DEVICES AND/OR EQUIPMENT REMOVED BY THIS CONTRACTOR SHALL BE INSPECTED BY THE OWNER FOR DETERMINATION OF DISPOSAL OR STORAGE AS DIRECTED BY THE OWNER. FOR PURPOSES OF PRICING THIS CONTRACTOR SHALL ASSUME THAT NO DEVICE OR EQUIPMENT WILL BE RE-USED UNLESS SPECIFICALLY NOTED AS SUCH.
4. PARTICULAR CARE SHALL BE TAKEN TO AVOID CREATING HAZARDS ON THE PROJECT OR CAUSING DISRUPTION OF SERVICES REMAINING.
5. ALL EXISTING EQUIPMENT INDICATED TO BE REMOVED SHALL BE DONE IN A NEAT AND WORKMANLIKE MANNER. ALL EXISTING EQUIPMENT INDICATED TO BE TURNED OVER TO THE OWNER SHALL BE PRESENTED TO THE OWNER IN GOOD CONDITION AT A LOCATION DESIGNATED BY THE OWNER. ALL OTHER EQUIPMENT SHALL BE REMOVED FROM THE SITE.

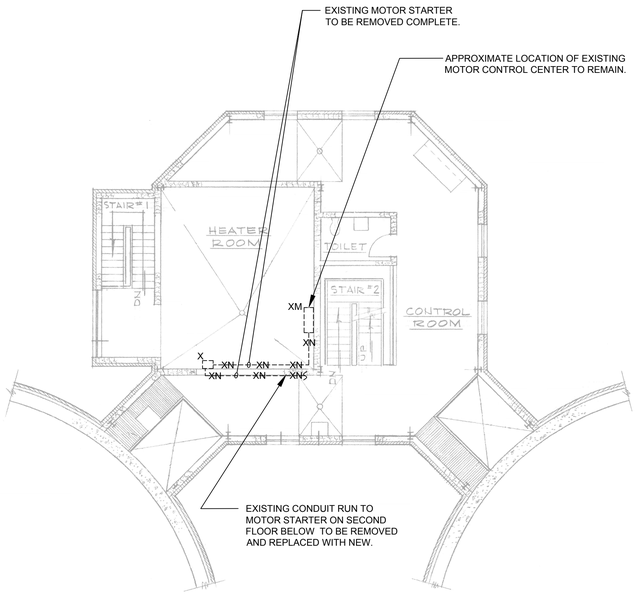

1 / E-002 SECOND FLOOR PLAN - DEMOLITION

SCALE: 1/8"=1'-0"

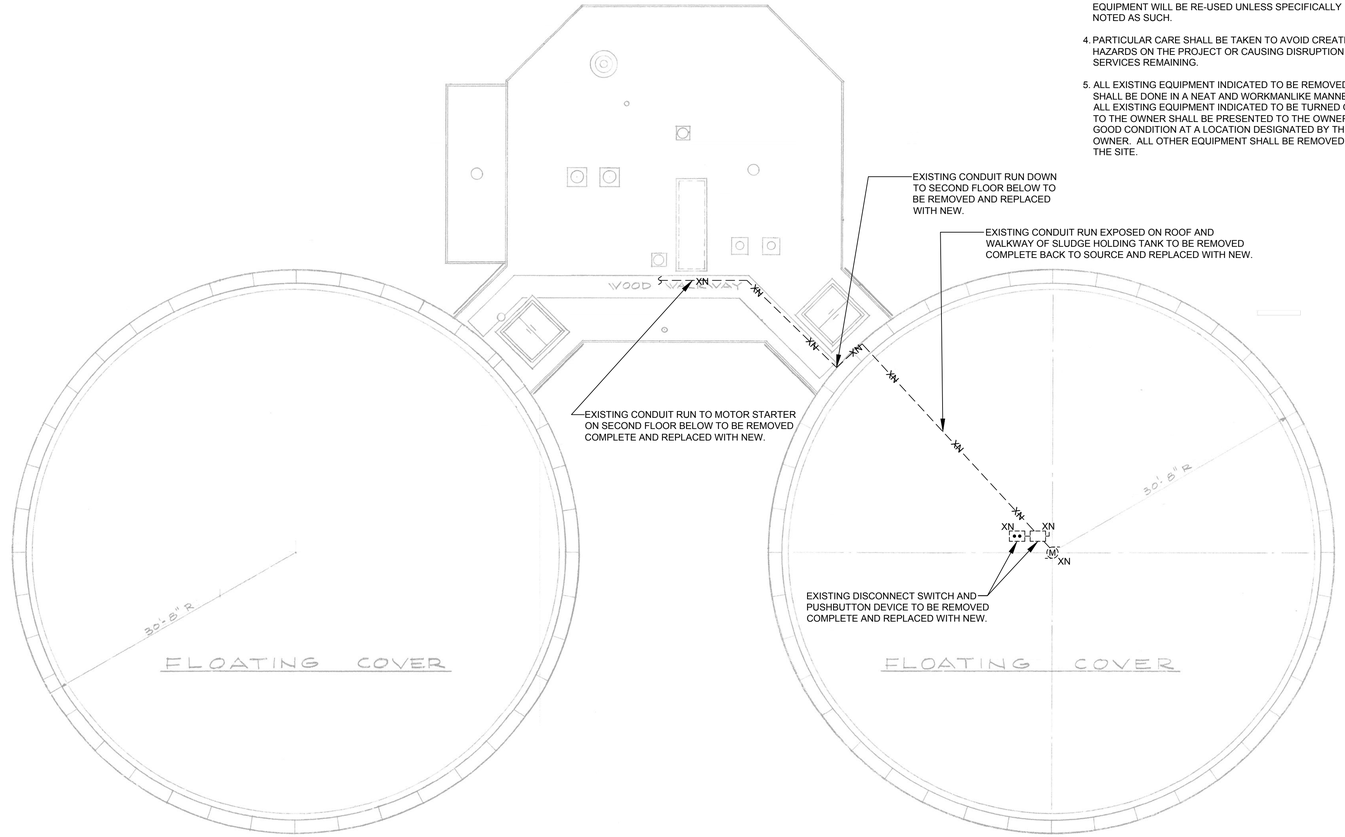

2 / E-002 ROOF PLAN - DEMOLITION

SCALE: 1/8"=1'-0"

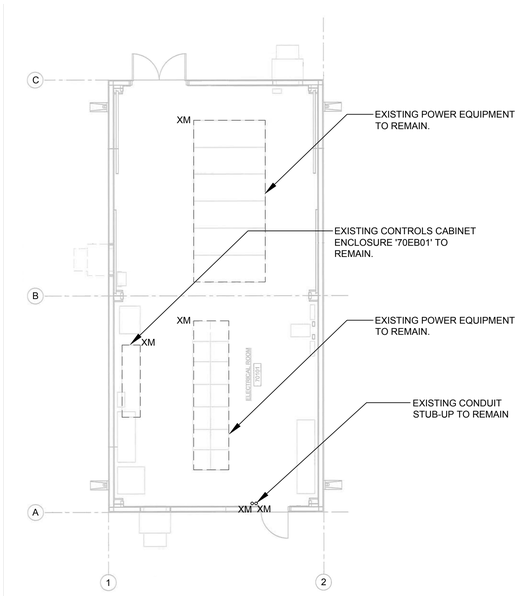

3 / E-002 ELECTRIC ROOM 70101

SCALE: 1/8"=1'-0"

Project:
CITY OF WOONSOCKET
RHODE ISLAND

GRAVITY THICKENER IMPROVEMENTS
WOONSOCKET WWTF
11 CUMBERLAND HILL RD
WOONSOCKET, RI 02895

Weston & Sampson Engineers, Inc.
55 Walkers Brook Drive, Suite 100
Reading, MA 01867
978.532.1900 800.SAMPSON
www.westonandsampson.com

Consultants:
GGD Consulting Engineers, Inc.
375 Faunce Corner Road, Suite D, Dartmouth, MA 02747-1258
p: 508-998-5700 • f: 508-998-0883 • www.g-g-d.com

Revisions:

No.	Date	Description

COA:

Seal: DAVID M. PEREIRA No. 11193 REGISTERED PROFESSIONAL ENGINEER ELECTRICAL

Issued For: BIDDING

Scale:

Date:	09/26/23
Drawn By:	MLP
Reviewed By:	DMP
Approved By:	
W&S Project No.:	ENG23-0204
W&S File No.:	

Drawing Title: ELECTRICAL DEMO PLANS - SLUDGE HOLDING TANKS

Sheet Number: E-002

SHEET 6/7

COPYRIGHT © 2023 WESTON & SAMPSON, INC.

K:\WESTON & SAMPSON\00-GD\Woonsocket WWTF Gravity Thickener\Drawings\ELECTE-01.dwg

GENERAL NOTES:

1. REFER TO GENERAL NOTES ON DRAWING E-001.
2. ALL NEW EQUIPMENT WILL BE PROVIDED BY THIS CONTRACTOR UNLESS OTHERWISE NOTED.

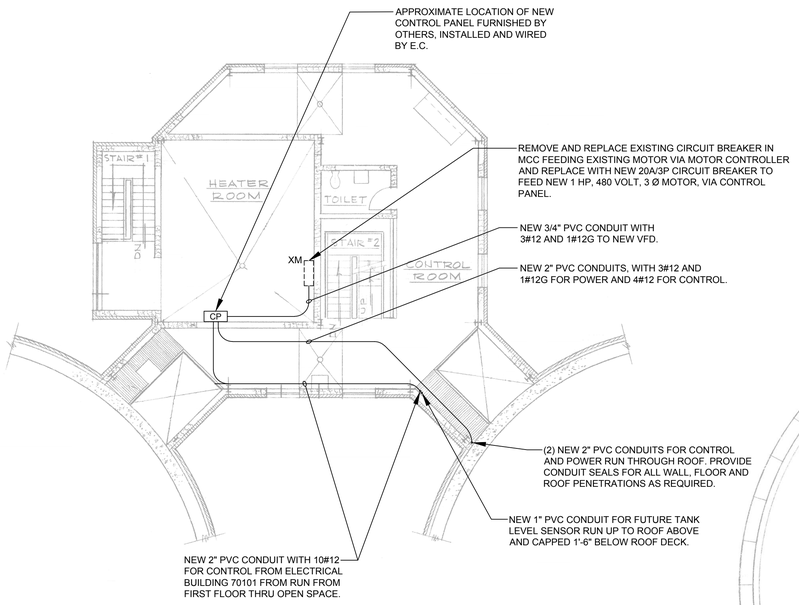

1 / E-003 SECOND FLOOR PLAN - NEW WORK

SCALE: 1/8"=1'-0"

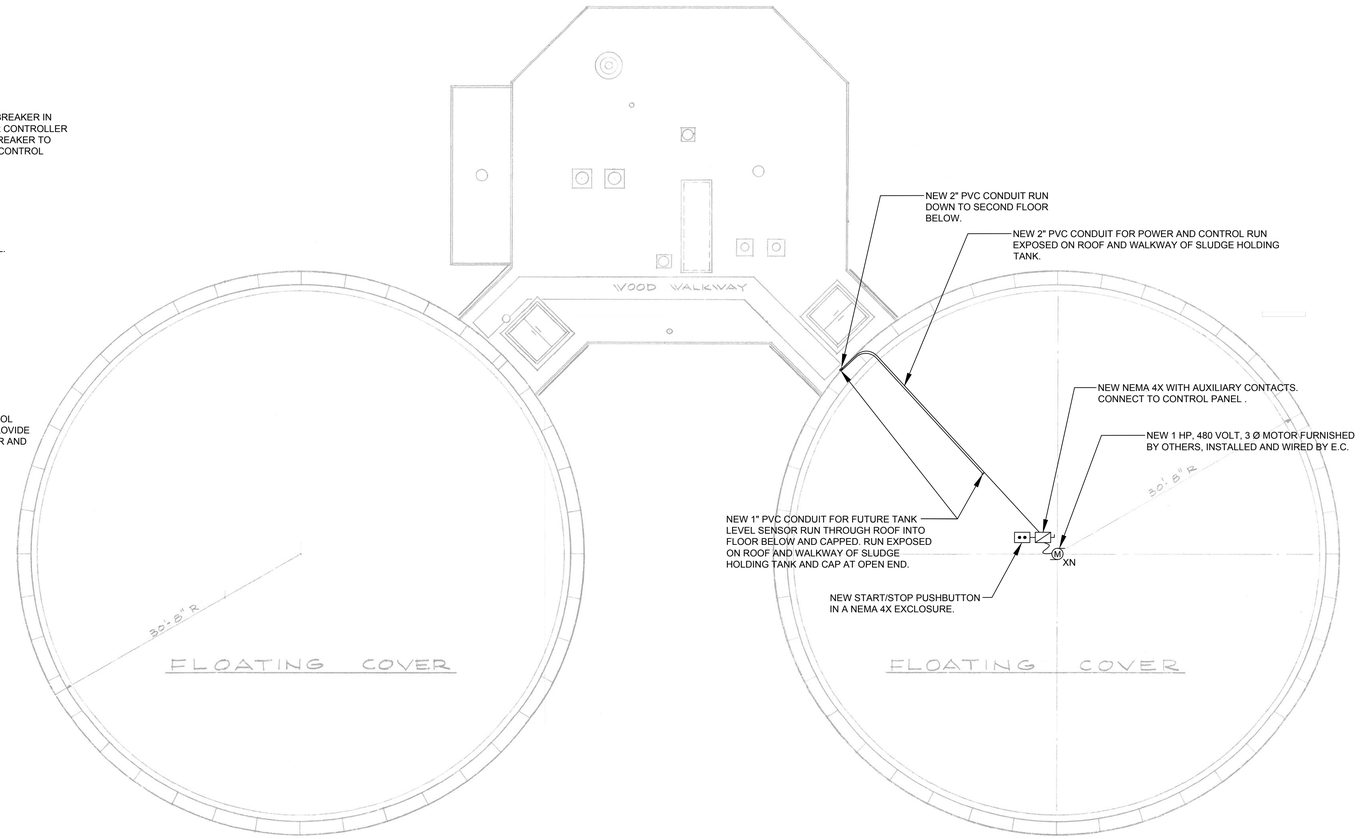

2 / E-003 ROOF PLAN - NEW WORK

SCALE: 1/8"=1'-0"

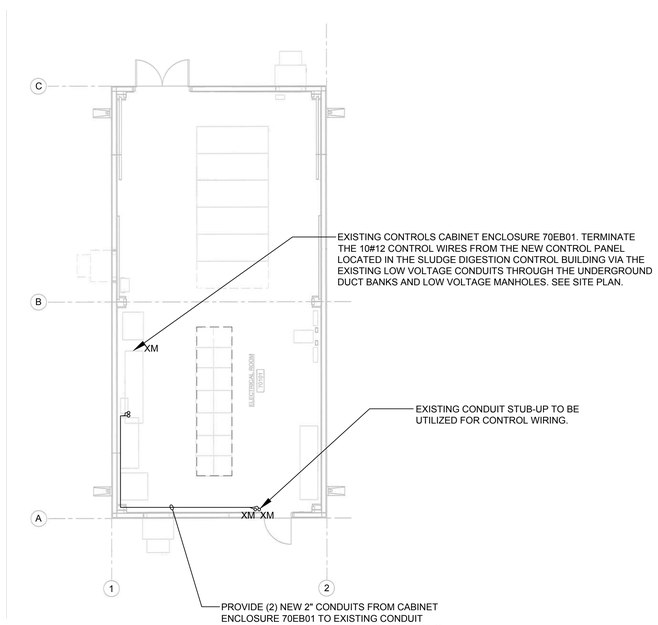

3 / E-003 ELECTRIC ROOM 70101

SCALE: 1/8"=1'-0"

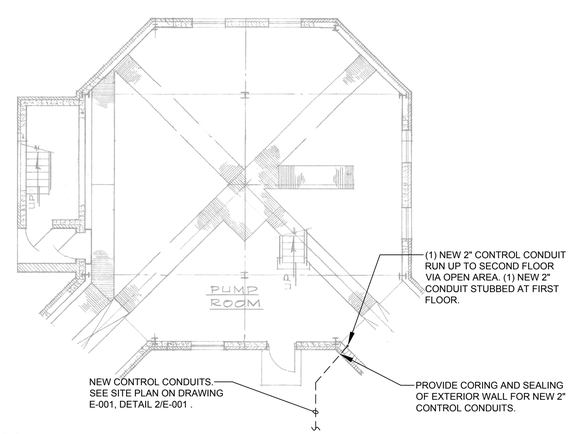

4 / E-003 FIRST FLOOR PLAN - NEW WORK

SCALE: 1/8"=1'-0"

Project:
CITY OF WOONSOCKET
RHODE ISLAND

GRAVITY THICKENER IMPROVEMENTS
WOONSOCKET WWTF
11 CUMBERLAND HILL RD
WOONSOCKET, RI 02895

Weston & Sampson Engineers, Inc.
55 Walkers Brook Drive, Suite 100
Reading, MA 01867
978.532.1900 800.SAMPSON
www.westonandsampson.com

Consultants:
GGD Consulting Engineers, Inc.
375 Faunce Corner Road, Suite D, Dartmouth, MA 02747-1258
p: 508-998-5700 • f: 508-998-0883 • www.g-g-d.com

Revisions:

No.	Date	Description

COA:

Seal:
DAVID M. PEREIRA
No. 11193
REGISTERED PROFESSIONAL ENGINEER ELECTRICAL

Issued For:
BIDDING

Scale:

Date:	09/26/23
Drawn By:	MLP
Reviewed By:	DMP
Approved By:	
W&S Project No.:	ENG23-0204
W&S File No.:	

Drawing Title:
ELECTRICAL NEW WORK PLANS - SLUDGE HOLDING TANKS

Sheet Number:
E-003
SHEET 7/7

COPYRIGHT © 2023 WESTON & SAMPSON, INC.

K:\WESTON & SAMPSON\00120 Woonsocket WWTF County Thickener\Drawings\E-E\E-01.dwg